.06 Incorporation by Reference.

A. In this chapter, the following documents are incorporated by reference, with the amendments specified in this chapter. Tentative interim amendments and supplements to these documents and to the codes and standards referenced in these documents are not included as part of this chapter unless specifically adopted by this chapter.

B. Documents Incorporated.

(1) NFPA 1, Uniform Fire Code (2006 Edition).

(2) NFPA 101, Life Safety Code (2006 Edition).

(3) International Building Code as incorporated by reference by the Maryland Building Performance Standards, which can be found under COMAR 05.02.01.02-1 in depository libraries and in the depositories described in §C of this regulation.

C. Incorporation by Reference Locations. The documents incorporated by reference in §B of this regulation are available for inspection at the following depositories:

(1) Office of the State Fire Marshal, Headquarters, 1201 Reisterstown Road, Building C, Pikesville, MD 21208, (410)653-8980, 1-800-525-3124;

(2) Office of the State Fire Marshal, Northeast Regional Office, 2 South Bond Street, Bel Air, MD 21014, (410) 836-4844;

(3) Office of the State Fire Marshal, Eastern Regional Office, 315 Aurora Park Drive, Unit 2, Easton, MD 21601, (410) 822-7609;

(4) Office of the State Fire Marshal, Western Regional Office, 12 North Jonathan Street, Suite 100, Hagerstown, MD 21740, (301) 791-4758;

(5) Office of the State Fire Marshal, Southern Regional Office, 200 Duke Street, Prince Frederick, MD 20678, (443) 550-6820;

(6) Office of the State Fire Marshal, Metro Regional Office, 7543 Main Street, Suite 101, Sykesville, MD 21784 (410) 552-0154;

(7) Office of the State Fire Marshal, Maryland State Police Barracks "C", 1125 National Highway, Cumberland, MD 21502, (301) 729-5021;

(8) Office of the State Fire Marshal, 170 East Main Street, Elkton, MD 21921, (410) 996-2790;

(9) Office of the State Fire Marshal, 201 Baptist Street, Suite 17, Salisbury, MD 21801, (410) 713-3780;

(10) Office of the State Fire Marshal, Garrett County Public Safety Center, 67 Friendsville Road, McHenry, MD 21541, (301) 387-0437;

(11) Department of Legislative Services Library, 90 State Circle, Annapolis, MD 21401, (410) 946-5400;

(12) Maryland State Law Library, Courts of Appeal Building, 361 Rowe Boulevard, Annapolis, MD 21401, (410) 260-1430;

(13) Marshall Law Library, University of Maryland School of Law, 501 West Fayette Street, Baltimore, MD 21201, (410) 706-6502;

(14) McKeldin Library, University of Maryland, Marylandia Department, College Park, MD 20742, (301) 405-0800; and

(15) State Library Resource Center, Enoch Pratt Central, Maryland Department, 400 Cathedral Street, Baltimore, MD 21201, (410) 396-1789.

This Document Posted By Public.Resource.Org, Inc., a California Nonprofit Organization.

Not Affiliated Or Authorized by NFPA or by the federal or state government.

PLEASE NOTE: THIS CODE MAY BE OUTDATED.
Check with your local authorities for the current codes.

NFPA 1 UNIFORM FIRE CODE™ 2006

NFPA Logo Removed

NFPA 1

UNIFORM FIRE CODE™

2006

IMPORTANT NOTICES AND DISCLAIMERS CONCERNING NFPA DOCUMENTS

Notice and Disclaimer of Liability Concerning the Use of NFPA Documents

NFPA codes, standards, recommended practices, and guides, of which the document contained herein is one, are developed through a consensus standards development process approved by the American National Standards Institute. This process brings together volunteers representing varied viewpoints and interests to achieve consensus on fire and other safety issues. While the NFPA administers the process and establishes rules to promote fairness in the development of consensus, it does not independently test, evaluate, or verify the accuracy of any information or the soundness of any judgments contained in its codes and standards.

The NFPA disclaims liability for any personal injury, property or other damages of any nature whatsoever, whether special, indirect, consequential or compensatory, directly or indirectly resulting from the publication, use of, or reliance on this document. The NFPA also makes no guaranty or warranty as to the accuracy or completeness of any information published herein.

In issuing and making this document available, the NFPA is not undertaking to render professional or other services for or on behalf of any person or entity. Nor is the NFPA undertaking to perform any duty owed by any person or entity to someone else. Anyone using this document should rely on his or her own independent judgment or, as appropriate, seek the advice of a competent professional in determining the exercise of reasonable care in any given circumstances.

The NFPA has no power, nor does it undertake, to police or enforce compliance with the contents of this document. Nor does the NFPA list, certify, test or inspect products, designs, or installations for compliance with this document. Any certification or other statement of compliance with the requirements of this document shall not be attributable to the NFPA and is solely the responsibility of the certifier or maker of the statement.

Important Notices and Disclaimers continued on inside back cover.

Copyright © 2005, National Fire Protection Association, All Rights Reserved

NFPA 1

Uniform Fire Code™

2006 Edition

This edition of NFPA 1, *Uniform Fire Code*™, was prepared by the Technical Committee on Uniform Fire Code and acted on by NFPA at its June Association Technical Meeting held June 6–10, 2005, in Las Vegas, NV. It was issued by the Standards Council on July 29, 2005, with an effective date of August 18, 2005, and supersedes all previous editions.

This edition of NFPA 1 was approved as an American National Standard on August 18, 2005.

Origin and Development of NFPA 1

This code was originally developed as a result of the requests of many members of the National Fire Protection Association for a document covering all aspects of fire protection and prevention that used the other developed NFPA codes and standards. NFPA staff initiated this work in 1971 upon a directive from the NFPA Board of Directors.

The original code was written around a format that served as a guide for the development of a local fire prevention code. Prerogatives of local officials were excluded from the main text of the document but included within appendices as guidance for exercising desired prerogatives.

In the late 1980s, the Fire Marshals Association of North America undertook the task of developing a code that was more self-contained, adding administrative sections and extracting heavily from other NFPA codes and standards. The draft was submitted to the Fire Prevention Code Committee. The Committee examined changes in the built environment as it is affected by fire and incorporated significant portions of the *Life Safety Code*®. A special task group on hazardous materials examined technological changes in the handling, storage, and use of flammable and combustible materials. Chapters extracting hazardous material requirements placed a greater emphasis on protection of life and property from chemical products made and used in the environment. A major rewrite resulted in the 1992 edition of the *Fire Prevention Code.*

The 1997 edition updated the text extracted from other NFPA codes and standards and added compliance with additional NFPA codes and standards as part of the requirements of NFPA 1.

The 2000 edition of NFPA 1 was a complete revision that updated the text extracted from other NFPA codes and standards. Additional direct references from NFPA codes and standards that are essential to a code official's use of the document were added. The Committee also added a new section on performance-based design as a valuable tool for code officials and design professionals. NFPA 1 was restructured to be more functional with respect to administration, code enforcement, and regulatory adoption processes.

The 2003 edition of NFPA 1, *Uniform Fire Code*™, was a complete revision of the code. It incorporated provisions from the Western Fire Chiefs, *Uniform Fire Code*™, under a partnership between NFPA and Western Fire Chiefs, while it updated and expanded the provisions extracted from other key NFPA codes and standards. To emphasize the partnership, the document was renamed NFPA 1, *Uniform Fire Code*™. The *Uniform Fire Code* is a trademark of the Western Fire Chiefs Association.

NFPA 1, *Uniform Fire Code*™, was restructured into parts to be more compatible with the regulatory adoption procedures, including administration and code enforcement, occupancies, processes, equipment, and hazardous materials provisions. The Committee included a newly expanded chapter on performance-based design as an enhanced tool for code officials and design professionals. Additional extracts and references from NFPA codes and standards that are essential to a code official's use of the document were added, bringing the number of referenced NFPA codes and standards to over 125. Additional chapters on hazardous materials were included that incorporate the provisions covered in the *Uniform Fire Code*™.

The 2006 edition of NFPA 1, *Uniform Fire Code*™, is a complete revision of the *Code* that incorporates the provisions from NFPA 230, *Standard for the Fire Protection of Storage.* The Technical Committee on Uniform Fire Code was previously given responsibility for NFPA 230 and incorporated the requirements into NFPA 1 rather than maintain a separate standard.

This edition also includes new chapters on classification of occupancy, motion picture studios, outdoor tire storage, and general storage, while updating and expanding the provisions extracted from other key NFPA codes and standards that were deemed essential to a code official's use of the document. The number of NFPA codes and standards referenced in this edition is 117.

NFPA 1 reflects the technical knowledge of the committees who are responsible for the codes and standards that are referenced in and from which text is extracted and incorporated into the technical provisions of NFPA 1. This *Code* is intended to provide state, county, and local jurisdictions with an effective fire code.

Technical Committee on Uniform Fire Code

Ronald R. Farr, *Chair*
Kalamazoo Township Fire Department, MI [E]
Rep. International Fire Marshals Association

Scott W. Adams, Park City Fire Service District, UT [E]
Anthony C. Apfelbeck, Altamonte Springs Building/Fire Safety Division, FL [E]
Rep. NFPA Architects, Engineers, & Building Officials Section
Carl F. Baldassarra, Schirmer Engineering Corporation, IL [I]
John F. Bender, Maryland State Fire Marshal's Office, MD [E]
Lawrence Brown, National Association of Home Builders, DC [U]
Rep. National Association of Home Builders
Thomas T. Bulow, Tucson, AZ [U]
Rep. NFPA Health Care Section
Jeffrey P. Collins, Palm Beach County Fire/Rescue, FL [E]
Rep. NFPA Fire Service Section
Brian J. Denk, Sara Lee Corporation, IL [U]
Rep. NFPA Industrial Fire Protection Section
Douglas S. Erickson, American Society for Healthcare Engineering, VI [U]
Rep. American Society for Healthcare Engineering
Keith L. Farmer, The DuPont Company, DE [U]
Robert Fash, Las Vegas Fire & Rescue, NV [E]
Reinhard Hanselka, Integrated Engineering Services Inc., FL [SE]
Alfred J. Hogan, Reedy Creek Improvement District, FL [U]
Howard Hopper, Underwriters Laboratories Inc., CA [RT]
Thomas W. Jaeger, Gage-Babcock & Associates Inc., VA [SE]
Robert J. James, City of Bloomington Fire Prevention, MN [E]
Richard S. Kraus, PSC Petroleum Safety Consultants, VA [U]
Rep. American Petroleum Institute
Michael J. Laderoute, MJL Associates, Inc., VA [M]
Rep. Fire Equipment Manufacturers' Association
James K. Lathrop, Koffel Associates, Inc., CT [SE]
Bart T. Massey, Charlotte Fire Department, NC [E]
Rep. International Association of Fire Chiefs
Wayne D. Moore, Hughes Associates, Inc., RI [M]
Rep. Automatic Fire Alarm Association, Inc.
Joseph L. Navarra, Pepco Holdings Inc., DC [U]
Rep. Edison Electric Institute
Kenneth R. Quick, Jr., City of Culver City Fire Department, CA [E]
Rep. South Bay Section Fire Prevention Officer Association
Robert Rowe, City of Downey Fire Department, CA [E]
Rep. Western Fire Chiefs Association
Jeffrey M. Shapiro, International Code Consultants, TX [M]
Rep. The Chlorine Institute, Inc.
Randolph W. Tucker, The RJA Group, Inc., TX [SE]
Wayne Waggoner, National Fire Sprinkler Association, Inc., TN [M]
Rep. National Fire Sprinkler Association
Peter J. Willse, GE Global Asset Protection Services, CT [I]
Rep. GE Global Asset Protection Services

Alternates

Timothy A. Bancroft, Integrated Engineering Services Inc., CA [SE]
(Alt. to R. Hanselka)
Kenneth E. Bush, Maryland State Fire Marshal's Office, MD [E]
(Alt. to J. F. Bender)
John A. Davenport, West Point, VA [I]
(Alt. to P. J. Willse)
Kenneth A. Ford, National Association of Home Builders, DC [U]
(Alt. to L. Brown)
Raymond A. Grill, The RJA Group, Inc., VA [SE]
(Alt. to R. W. Tucker)
Bill Hopple, Tyco/SimplexGrinnell, CA [M]
(Voting Alt. to NEMA Rep.)
Kevin J. Kelly, National Fire Sprinkler Association, Inc., NY [M]
(Alt. to W. Waggoner)
Roy C. (Chuck) Kimball, Brooks Equipment Company, Inc., NC [M]
(Alt. to M. J. Laderoute)
William E. Koffel, Koffel Associates, Inc., MD [SE]
(Alt. to J. K. Lathrop)
John Lake, Marion County Fire Rescue, FL [E]
(Alt. to J. P. Collins)
Jennifer Nelson, AT&T - EH&S, NY [U]
(Alt. to B. J. Denk)
James S. Peterkin, HLM Design/Heery International, PA [U]
(Alt. to T. T. Bulow)
Alfredo M. Ramirez, Underwriters Laboratories Inc., IL [RT]
(Alt. to H. Hopper)
Anthony Sanfilippo, Michigan Dept. of Consumer & Industry Services, MI [E]
(Alt. to R. R. Farr)
Chester W. Schirmer, Schirmer Engineering Corporation, NC [I]
(Alt. to C. F. Baldassarra)
Rick Thornberry, The Code Consortium, Inc., CA [M]
(Voting Alt. to W. R. Grace Rep.)
Gary F. Trojak, The Chlorine Institute, Inc., VA [M]
(Alt. to J. M. Shapiro)

Nonvoting

Robert Bourke, Lynn Fire Department, MA [E]
Rep. Northeast Regional Fire Code Development Committee

James E. Everitt, Tualatin Valley Fire/Rescue, OR [E]
Rep. Western Regional Fire Code Development Committee

Jon Nisja, Minnesota State Fire Marshal Division, MN [E]
Rep. North Central Regional Fire Code Development Committee

Eddie Phillips, City of East Ridge Fire and Police, TN [E]
Rep. Southeast Regional Fire Code Development Committee

Walter Smittle, Ripley, WV [SE]
(Member Emeritus)

Martha H. Curtis, NFPA Staff Liaison

This list represents the membership at the time the Committee was balloted on the final text of this edition. Since that time, changes in the membership may have occurred. A key to classifications is found at the back of the document.

NOTE: Membership on a committee shall not in and of itself constitute an endorsement of the Association or any document developed by the committee on which the member serves.

Committee Scope: This Committee shall have primary responsibility for documents on a Fire Prevention Code that includes appropriate administrative provisions, to be used with the National Fire Codes for the installation, operation, and maintenance of buildings, structures, and premises for the purpose of providing safety to life and property from fire and explosion. This includes development of requirements for, and maintenance of, systems and equipment for fire control and extinguishment. Safety to life of occupants of buildings and structures is under the primary jurisdiction of the Committee on Safety to Life.

Contents

Part I Administration 1– 11

Chapter 1 Administration 1– 11
1.1 Scope 1– 11
1.2 Purpose 1– 11
1.3 Application 1– 11
1.4 Equivalencies, Alternatives, and Modifications 1– 12
1.5 Units 1– 12
1.6 Enforcement 1– 12
1.7 Authority 1– 12
1.8 Duties and Powers of the Incident Commander 1– 13
1.9 Liability 1– 14
1.10 Board of Appeals 1– 14
1.11 Records and Reports 1– 15
1.12 Permits and Approvals 1– 15
1.13 Certificates of Fitness 1– 22
1.14 Plan Review 1– 22
1.15 Technical Assistance 1– 22
1.16 Notice of Violations and Penalties 1– 23

Chapter 2 Referenced Publications 1– 23
2.1 General 1– 23
2.2 NFPA Publications 1– 23
2.3 Other Publications 1– 25
2.4 References for Extracts in Mandatory Sections 1– 27

Chapter 3 Definitions 1– 28
3.1 General 1– 28
3.2 NFPA Official Definitions 1– 28
3.3 General Definitions 1– 28
3.4 Special Performance-Based Definitions 1– 44

Chapter 4 General Requirements 1– 44
4.1 Goals and Objectives 1– 44
4.2 Assumptions 1– 45
4.3 Compliance Options 1– 46
4.4 Fundamental Requirements 1– 46
4.5 General Requirements 1– 46

Chapter 5 Performance-Based Option 1– 47
5.1 General 1– 47
5.2 Performance Criteria 1– 49
5.3 Retained Prescriptive Requirements 1– 49
5.4 Design Scenarios 1– 49
5.5 Evaluation of Proposed Designs 1– 51
5.6 Safety Factors 1– 51
5.7 Documentation Requirements 1– 51

Chapter 6 Classification of Occupancy 1– 52
6.1 Classification of Occupancy 1– 52

Chapter 7 Reserved 1– 54

Chapter 8 Reserved 1– 54

Chapter 9 Reserved 1– 54

Part II General 1– 54

Chapter 10 General Fire Safety 1– 54
10.1 Fundamental Requirements 1– 54
10.2 Owner/Occupant Responsibilities 1– 54
10.3 Occupancy 1– 56
10.4 Maintenance, Inspection, and Testing 1– 56
10.5 Building Evacuation 1– 56
10.6 Fire Drills 1– 56
10.7 Reporting of Fires and Other Emergencies 1– 56
10.8 Tampering with Fire Safety Equipment 1– 57
10.9 Emergency Plans 1– 57
10.10 Smoking 1– 57
10.11 Open Fires, Incinerators, and Commercial Fireplaces 1– 57
10.12 Fire Protection Markings 1– 58
10.13 Vacant Buildings and Premises 1– 58
10.14 Combustible Vegetation 1– 59
10.15 Special Outdoor Events, Carnivals, and Fairs 1– 59
10.16 Outside Storage 1– 60
10.17 Parade Floats 1– 60
10.18 Powered Industrial Trucks 1– 60
10.19 Combustible Materials 1– 61

Chapter 11 Building Services 1– 61
11.1 Electrical Fire Safety 1– 61
11.2 Heating, Ventilation, and Air-Conditioning 1– 62
11.3 Elevators, Escalators, and Conveyors 1– 62
11.4 Utilities 1– 62
11.5 Heating Appliances 1– 62
11.6 Rubbish Chutes, Incinerators, and Laundry Chutes 1– 63
11.7 Stationary Generators and Standby Power Systems 1– 63
11.8 Smoke Control 1– 64
11.9 Emergency Command Center 1– 64

Chapter 12 Features of Fire Protection 1– 64
12.1 General 1– 64
12.2 Construction 1– 64
12.3 Fire-Resistant Assemblies 1– 64
12.4 Fire Doors and Windows 1– 64
12.5 Interior Finish 1– 65
12.6 Furnishings, Contents, Decorations, and Treated Finishes 1– 65
12.7 Fire Barriers 1– 65

12.8 Smoke Partitions 1– 68
12.9 Smoke Barriers 1– 69

Chapter 13 Fire Protection Systems 1– 70
13.1 General 1– 70
13.2 Standpipe Systems 1– 71
13.3 Automatic Sprinklers 1– 71
13.4 Fire Pumps 1– 83
13.5 Water Supply 1– 86
13.6 Portable Extinguishers 1– 86
13.7 Detection, Alarm, and Communications Systems 1– 92
13.8 Other Fire Protection Systems 1–107

Chapter 14 Means of Egress 1–107
14.1 Application 1–107
14.2 Exit Access Corridors 1–107
14.3 Exits 1–107
14.4 Means of Egress Reliability 1–108
14.5 Doors 1–108
14.6 Enclosure and Protection of Stairs 1–111
14.7 Exit Passageways 1–112
14.8 Capacity of Means of Egress 1–113
14.9 Number of Means of Egress 1–115
14.10 Arrangement of Means of Egress 1–115
14.11 Discharge from Exits 1–117
14.12 Illumination of Means of Egress 1–118
14.13 Emergency Lighting 1–118
14.14 Marking of Means of Egress 1–119
14.15 Secondary Means of Escape 1–121

Chapter 15 Planned Building Groups 1–121
15.1 Applicability 1–121
15.2 Compliance 1–121
15.3 Plans 1–121

Chapter 16 Safeguards During Building Construction, Alteration, and Demolition Operations 1–121
16.1 General Requirements 1–121
16.2 Processes and Hazards 1–121
16.3 Fire Protection 1–122
16.4 Safeguarding Construction and Alteration Operations 1–123
16.5 Fire Safety During Demolition 1–125
16.6 Torch-Applied Roofing Systems 1–125
16.7 Tar Kettles 1–125
16.8 Asbestos Removal 1–126

Chapter 17 Wildland Urban Interface 1–126
17.1 General 1–126
17.2 Plans 1–126
17.3 Wildland Fire–Prone Areas 1–126

Chapter 18 Fire Department Access and Water Supply 1–128
18.1 General 1–128
18.2 Fire Department Access 1–128
18.3 Water Supplies and Fire Hydrants 1–129

Chapter 19 Combustible Waste and Refuse 1–129
19.1 General 1–129
19.2 Combustible Waste and Refuse 1–130

Part III Occupancy 1–130

Chapter 20 Occupancy Fire Safety 1–130
20.1 Assembly Occupancies 1–130
20.2 Educational Occupancies 1–135
20.3 Day-Care Occupancies 1–135
20.4 Health Care Occupancies 1–137
20.5 Residential Board and Care Occupancies 1–139
20.6 Ambulatory Health Care Centers 1–140
20.7 Detention and Correctional Occupancies 1–141
20.8 Hotels and Dormitories 1–142
20.9 Apartment Buildings 1–142
20.10 Lodging or Rooming Houses 1–143
20.11 One- and Two-Family Dwellings and Manufactured Housing 1–143
20.12 Mercantile Occupancies 1–143
20.13 Business Occupancies 1–143
20.14 Industrial Occupancies 1–143
20.15 Storage Occupancies 1–143
20.16 Special Structures and High-Rise Buildings 1–143
20.17 Historic Buildings and Cultural Resources 1–144

Chapter 21 Airports and Heliports 1–144
21.1 Hangars 1–144
21.2 Terminals 1–144
21.3 Rooftop Heliport Construction and Protection 1–145

Chapter 22 Automobile Wrecking Yards 1–147
22.1 General 1–147
22.2 Permits 1–147
22.3 Fire Department Access Roads 1–147
22.4 Welding and Cutting 1–147
22.5 Housekeeping 1–147
22.6 Fire Extinguishers 1–147
22.7 Tire Storage 1–147
22.8 Burning Operations 1–147
22.9 Motor Vehicle Fluids and Hazardous Materials 1–147

Chapter 23 Cleanrooms 1–147
23.1 General 1–147
23.2 Applicability 1–147
23.3 Permits 1–147

Chapter 24 Drycleaning 1–148
24.1 General 1–148
24.2 Permits 1–148

Chapter 25 Grandstands and Bleachers, Folding and Telescopic Seating, Tents, and Membrane Structures 1–148
25.1 General 1–148
25.2 Tents 1–149
25.3 Grandstands 1–150
25.4 Folding and Telescopic Seating 1–151
25.5 Permanent Membrane Structures 1–152
25.6 Temporary Membrane Structures 1–153

Chapter 26 Laboratories Using Chemicals 1–154
26.1 General 1–154
26.2 Laboratories in Health Care Occupancies 1–154
26.3 Permits 1–154

Chapter 27 Manufactured Home and Recreational Vehicle Sites 1–154
27.1 Manufactured Home Sites 1–154
27.2 Recreational Vehicle Parks and Campgrounds 1–154

Chapter 28 Marinas, Boatyards, Marine Terminals, Piers, and Wharves 1–155
28.1 Marinas, Boatyards, and Other Recreational Marine Facilities 1–155
28.2 Marine Terminals, Piers, and Wharves 1–158
28.3 Construction, Conversion, Repair, and Lay-Up of Vessels 1–158

Chapter 29 Parking Garages 1–158
29.1 General 1–158

Chapter 30 Motor Fuel Dispensing Facilities and Repair Garages 1–158
30.1 Motor Fuel Dispensing Facilities 1–158
30.2 Repair Garages 1–159
30.3 Operational Requirements 1–160

Chapter 31 Forest Products 1–161
31.1 General 1–161
31.2 Permits 1–161
31.3 Protection of Storage of Forest Products 1–161

Chapter 32 Motion Picture and Television Production Studio Soundstages and Approved Production Facilities 1–165
32.1 General 1–165
32.2 Permits 1–165
32.3 Housekeeping 1–165
32.4 Fire Protection Features 1–165

Chapter 33 Outside Storage of Tires 1–165
33.1 General 1–165
33.2 Individual Piles 1–166
33.3 Emergency Response Plan 1–166
33.4 Fire Control Measures 1–166
33.5 Site Access 1–166
33.6 Signs and Security 1–166
33.7 Outdoor Storage of Altered Tire Material 1–166

Chapter 34 General Storage 1–167
34.1 General 1–167
34.2 Classification of Commodities 1–167
34.3 Building Construction 1–168
34.4 Storage Arrangement 1–168
34.5 General Fire Protection 1–169
34.6 Building Equipment, Maintenance, and Operations 1–169
34.7 Protection of Rack Storage 1–170
34.8 Protection of Rubber Tires 1–171
34.9 Protection of Roll Paper 1–171
34.10 Storage of Idle Pallets 1–171

Chapter 35 Reserved 1–172

Chapter 36 Reserved 1–172

Chapter 37 Reserved 1–172

Chapter 38 Reserved 1–172

Chapter 39 Reserved 1–172

Part IV Processes 1–172

Chapter 40 Dust Explosion Prevention 1–172
40.1 General 1–172
40.2 Permits 1–172

Chapter 41 Hot Work Operations 1–172
41.1 General 1–172
41.2 Responsibility for Hot Work 1–173
41.3 Fire Prevention Precautions 1–173
41.4 Sole Proprietors and Individual Operators 1–175
41.5 Public Exhibitions and Demonstrations 1–175
41.6 Arc Welding Equipment 1–175

Chapter 42 Refueling 1–175
42.1 General 1–175
42.2 Automotive Fuel Servicing 1–175
42.3 Marine Fueling 1–185
42.4 Aircraft Fuel Servicing 1–187
42.5 Alternate Fuels 1–194

Chapter 43 Spraying, Dipping, and Coating Using Flammable or Combustible Materials 1–195
43.1 Application 1–195
43.2 Automated Electrostatic Spray Equipment 1–206
43.3 Handheld Electrostatic Spray Equipment 1–206
43.4 Drying, Curing, or Fusion Processes 1–207
43.5 Miscellaneous Spray Operations 1–207
43.6 Powder Coating 1–208
43.7 Organic Peroxides and Plural Component Coatings 1–208
43.8 Styrene Cross-Linked Composites Manufacturing (Glass Fiber Reinforced Plastics) 1–208
43.9 Dipping and Coating Processes 1–209
43.10 Training 1–209

Chapter 44 Solvent Extraction 1–210
44.1 General 1–210
44.2 Application 1–210
44.3 Permits 1–210
44.4 Special Requirements 1–210

Chapter 45 Combustible Fibers 1–210
45.1 General 1–210
45.2 Electrical Wiring 1–210
45.3 No Smoking 1–210
45.4 Vehicles and Material Handling Equipment 1–210
45.5 Loose Storage of Combustible Fibers 1–210
45.6 Baled Storage 1–211
45.7 Storage of Hay, Straw, and Other Similar Agricultural Products 1–211
45.8 Hazardous Materials 1–211

Chapter 46 Reserved 1–211

Chapter 47 Reserved 1–211

Chapter 48 Reserved 1–211

Chapter 49 Reserved 1–211

Part V Equipment 1–211

Chapter 50 Commercial Cooking Equipment 1–211
50.1 Application 1–211
50.2 General Requirements 1–212
50.3 Protection of Coverings and Enclosure Materials 1–212
50.4 Fire-Extinguishing Equipment 1–212
50.5 Procedures for the Use and Maintenance of Equipment 1–215
50.6 Minimum Safety Requirements for Cooking Equipment 1–216

Chapter 51 Industrial Ovens and Furnaces 1–216
51.1 General 1–216
51.2 Location 1–216
51.3 Safety Controls 1–216

Chapter 52 Stationary Lead–Acid Battery Systems 1–216
52.1 General 1–216
52.2 Permits 1–216
52.3 Safety Features 1–216

Chapter 53 Mechanical Refrigeration 1–217
53.1 General 1–217
53.2 Classification 1–217
53.3 Definitions 1–217
53.4 Permits and Plans 1–217
53.5 Installation and Maintenance 1–217
53.6 Access 1–217
53.7 Emergency Pressure Control System 1–218
53.8 Treatment and Flaring Systems for Refrigerant Discharge 1–218
53.9 Ammonia Diffusion Systems 1–218
53.10 Refrigeration Machinery Rooms 1–219
53.11 Refrigerant Vapor Detection and Alarm Systems 1–220
53.12 Electrical 1–220
53.13 Instructions 1–220
53.14 Signs and Labels 1–220
53.15 Testing of Equipment 1–220
53.16 Notification of Refrigerant Discharges 1–220
53.17 Changing of Refrigerant Type 1–221
53.18 Records of Refrigerant Quantities 1–221
53.19 Storage 1–221

Chapter 54 Reserved 1–221

Chapter 55 Reserved 1–221

Chapter 56 Reserved 1–221

Chapter 57 Reserved 1–221

Chapter 58 Reserved 1–221

Chapter 59 Reserved 1–221

Part VI Hazardous Materials 1–221

Chapter 60 Hazardous Materials 1–221
60.1 General Requirements 1–221
60.2 Requirements for All Occupancies Containing High Hazard Contents 1–236
60.3 Requirements for Occupancies Exceeding the Maximum Allowable Quantities per Control Area for High Hazard Contents 1–237
60.4 Supplemental Requirements for Use and Handling of Hazardous Materials in Amounts Exceeding Maximum Allowable Quantities 1–243

Chapter 61 Aerosol Products 1–247
61.1 General Provisions 1–247
61.2 Classification of Aerosol Products 1–247
61.3 Marking of Packages of Aerosol Products 1–247
61.4 Basic Requirements 1–247
61.5 Storage in Warehouses and Storage Areas 1–248
61.6 Mercantile Occupancies 1–249
61.7 Operations and Maintenance 1–250

Chapter 62 Reserved 1–250

Chapter 63 Compressed Gases and Cryogenic Fluids 1–250
63.1 General Provisions 1–250
63.2 Building-Related Controls 1–251
63.3 Compressed Gases 1–256
63.4 Cryogenic Fluids 1–265
63.5 Bulk Oxygen Systems 1–271
63.6 Gaseous Hydrogen Systems 1–271
63.7 Liquefied Hydrogen Systems 1–271

Chapter 64 Corrosive Solids and Liquids 1–271
64.1 General 1–271
64.2 Outdoor Storage 1–271

Chapter 65 Explosives, Fireworks, and Model Rocketry 1–271
65.1 General 1–271
65.2 Display Fireworks 1–271
65.3 Pyrotechnics Before a Proximate Audience 1–271
65.4 Flame Effects Before an Audience 1–271
65.5 Fireworks Manufacturing 1–271
65.6 Model Rocketry 1–271
65.7 Rocketry Manufacturing 1–271
65.8 High Power Rocketry 1–271
65.9 Explosives 1–271
65.10 Ammonium Nitrate 1–272
65.11 Sale, Handling, and Storage of Consumer Fireworks 1–272

Chapter 66 Flammable and Combustible Liquids 1–279
66.1 General 1–279
66.2 Tank Storage 1–280
66.3 Piping Systems 1–288
66.4 Container and Portable Tank Storage 1–288
66.5 Operations 1–314
66.6 Electrical Equipment and Installations 1–321
66.7 Handling Underground Releases of Flammable and Combustible Liquids 1–321

Chapter 67 Flammable Solids 1–324
67.1 General 1–324
67.2 Outdoor Storage 1–324

Chapter 68 Highly Toxic and Toxic Solids and Liquids 1–324
68.1 General 1–324
68.2 Indoor Storage 1–325
68.3 Outdoor Storage 1–325

Chapter 69 Liquefied Petroleum Gases and Liquefied Natural Gases 1–325
69.1 General Provisions 1–325
69.2 LP-Gas Equipment and Appliances 1–325
69.3 Installation of LP-Gas Systems 1–327
69.4 LP-Gas Liquid Transfer 1–338
69.5 Storage of Cylinders Awaiting Use, Resale, or Exchange 1–340
69.6 Vehicular Transportation of LP-Gas 1–342
69.7 LP-Gases at Utility Plants 1–344
69.8 Liquefied Natural Gas (LNG) 1–344

Chapter 70 Oxidizers and Organic Peroxides 1–344
70.1 General 1–344
70.2 Liquid and Solid Oxidizers 1–344
70.3 Organic Peroxide Formulations 1–352

Chapter 71 Pyrophoric Solids and Liquids 1–356
71.1 General 1–356
71.2 Outdoor Storage 1–356

Chapter 72 Unstable (Reactive) Solids and Liquids 1–356
72.1 General 1–356
72.2 Outdoor Storage 1–356

Chapter 73 Water-Reactive Solids and Liquids 1–356
73.1 General 1–356
73.2 Outdoor Storage 1–357

Annex A Explanatory Material 1–357

Annex B Oxidizers and Organic Peroxides 1–464

Annex C Sample Ordinance Adopting the NFPA 1, *Uniform Fire Code*™ 1–473

Annex D Hazardous Materials Management Plans and Hazardous Materials Inventory Statements 1–474

Annex E Model Citation Program 1–483

Annex F Model Fees and Charges Program 1–490

Annex G Ozone Gas–Generating Equipment 1–494

Annex H Fire Flow Requirements for Buildings 1–495

Annex I **Fire Hydrant Locations and Distribution** 1–497

Annex J **Protection of Outdoor Storage** 1–498

Annex K **Explanation of Rack Storage Test Data and Procedures** 1–499

Annex L **Protection of Baled Cotton: History of Guidelines** 1–503

Annex M **Recommendations for Fighting Rubber Tire Fires in Sprinklered Buildings** 1–513

Annex N **AHJ Minimum Qualifications and Job Descriptions for Code Enforcement Personnel** 1–514

Annex O **Additional, Adoptable NFPA Codes and Standards** 1–517

Annex P **Informational References** 1–518

Index 1–524

NFPA 1

Uniform Fire Code™

2006 Edition

IMPORTANT NOTE: This NFPA document is made available for use subject to important notices and legal disclaimers. These notices and disclaimers appear in all publications containing this document and may be found under the heading "Important Notices and Disclaimers Concerning NFPA Documents." They can also be obtained on request from NFPA or viewed at www.nfpa.org/disclaimers.

NOTICE: An asterisk (*) following the number or letter designating a paragraph indicates that explanatory material on the paragraph can be found in Annex A.

A reference in brackets [ ] following a section or paragraph indicates material that has been extracted from another NFPA document. As an aid to the user, the complete title and edition of the source documents for extracts in mandatory sections of the document are given in Chapter 2 and those for extracts in informational sections are given in Annex P. Editorial changes to extracted material consist of revising references to an appropriate division in this document or the inclusion of the document number with the division number when the reference is to the original document. Requests for interpretations or revisions of extracted text shall be sent to the technical committee responsible for the source document.

Information on referenced publications can be found in Chapter 2 and Annex P.

Chapter 1 Administration

1.1 Scope.

1.1.1 The scope includes, but is not limited to, the following:

(1) Inspection of permanent and temporary buildings, processes, equipment, systems, and other fire and related life safety situations
(2) Investigation of fires, explosions, hazardous materials incidents, and other related emergency incidents
(3) Review of design and construction plans, drawings, and specifications for life safety systems, fire protection systems, access, water supplies, processes, and hazardous materials and other fire and life safety issues
(4) Fire and life safety education of fire brigades, employees, responsible parties, and the general public
(5) Existing occupancies and conditions, the design and construction of new buildings, remodeling of existing buildings, and additions to existing buildings
(6) Design, alteration, modification, construction, maintenance, and testing of fire protection systems and equipment
(7)*Access requirements for fire department operations
(8) Hazards from outside fires in vegetation, trash, building debris, and other materials
(9) Regulation and control of special events including, but not limited to, assemblage of people, exhibits, trade shows, amusement parks, haunted houses, outdoor events, and other similar special temporary and permanent occupancies
(10) Interior finish, decorations, furnishings, and other combustibles that contribute to fire spread, fire load, and smoke production
(11) Storage, use, processing, handling, and on-site transportation of flammable and combustible gases, liquids, and solids
(12) Storage, use, processing, handling, and on-site transportation of hazardous materials
(13) Control of emergency operations and scenes
(14) Conditions affecting fire fighter safety

1.1.2 Title. The title of this *Code* shall be NFPA 1, *Uniform Fire Code*, of the National Fire Protection Association (NFPA).

1.2* Purpose. The purpose of this *Code* is to prescribe minimum requirements necessary to establish a reasonable level of fire and life safety and property protection from the hazards created by fire, explosion, and dangerous conditions.

1.3 Application.

1.3.1 This *Code* shall apply to both new and existing conditions.

1.3.2* Referenced Standards.

1.3.2.1 Details regarding processes, methods, specifications, equipment testing and maintenance, design standards, performance, installation, or other pertinent criteria contained in those codes and standards listed in Chapter 2 of this *Code* shall be considered a part of this *Code*.

1.3.2.2 Where no applicable codes, standards, or requirements are set forth in this *Code* or contained within other laws, codes, regulations, ordinances, or bylaws adopted by the authority having jurisdiction (AHJ), compliance with applicable codes and standards of NFPA or other nationally recognized standards as are approved shall be deemed as prima facie evidence of compliance with the intent of this *Code*. *(See Annex O.)*

1.3.2.3 Nothing herein shall derogate from the authority of the AHJ to determine compliance with codes or standards for those activities or installations within the AHJ's responsibility.

1.3.3 Conflicts.

1.3.3.1 When a requirement differs between this *Code* and a referenced document, the requirement of this *Code* shall apply.

1.3.3.2 When a conflict between a general requirement and a specific requirement occurs, the specific requirement shall apply.

1.3.4 Multiple Occupancies. Where two or more classes of occupancy occur in the same building or structure and are so intermingled that separate safeguards are impracticable, means of egress facilities, construction, protection, and other safeguards shall comply with the most restrictive fire safety requirements of the occupancies involved.

1.3.5 Vehicles and Vessels. Vehicles, vessels, or other similar conveyances, when in fixed locations and occupied as buildings, as described by Section 11.6 of NFPA *101, Life Safety Code*, shall be treated as buildings and comply with this *Code*.

1.3.6 Buildings.

1.3.6.1 Buildings permitted for construction after the adoption of this *Code* shall comply with the provisions stated herein for new buildings.

1.3.6.2* Buildings in existence or permitted for construction prior to the adoption of this *Code* shall comply with the provisions stated herein or referenced for existing buildings *(see 10.3.2)*.

1.3.6.3 Repairs, renovations, alterations, reconstruction, change of occupancy, and additions to buildings shall conform with NFPA *101* and the building code.

1.3.6.4 Newly introduced equipment, materials, and operations regulated by this *Code* shall comply with the requirements for new construction or processes.

1.3.7 Severability. If any provision of this *Code* or the application thereof to any person or circumstance is held invalid, the remainder of the *Code* and the application of such provision to other persons or circumstances shall not be affected thereby.

1.4 Equivalencies, Alternatives, and Modifications.

1.4.1 Equivalencies. Nothing in this *Code* is intended to prevent the use of systems, methods, or devices of equivalent or superior quality, strength, fire resistance, effectiveness, durability, and safety to those prescribed by this *Code*, provided technical documentation is submitted to the AHJ to demonstrate equivalency and the system, method, or device is approved for the intended purpose.

1.4.2 Alternatives. The specific requirements of this *Code* shall be permitted to be altered by the AHJ to allow alternative methods that will secure equivalent fire safety, but in no case shall the alternative afford less fire safety than, in the judgment of the AHJ, that which would be provided by compliance with the provisions contained in this *Code*.

1.4.3 Modifications. The AHJ is authorized to modify any of the provisions of this *Code* upon application in writing by the owner, a lessee, or a duly authorized representative where there are practical difficulties in the way of carrying out the provisions of the *Code*, provided that the intent of the *Code* shall be complied with, public safety secured, and substantial justice done.

1.4.4 Buildings with equivalency, alternatives, or modifications, approved by the AHJ shall be considered as conforming with this *Code*.

1.4.5 Each application for an alternative fire protection feature shall be filed with the AHJ and shall be accompanied by such evidence, letters, statements, results of tests, or other supporting information as required to justify the request. The AHJ shall keep a record of actions on such applications, and a signed copy of the AHJ's decision shall be provided for the applicant.

1.4.6 Approval. The AHJ shall approve such alternative construction systems, materials, or methods of design when it is substantiated that the standards of this *Code* are at least equaled. If, in the opinion of the AHJ, the standards of this *Code* shall not be equaled by the alternative requested, approval for permanent work shall be refused. Consideration shall be given to test or prototype installations.

1.4.7 Tests.

1.4.7.1 Whenever there is insufficient evidence of compliance with the requirements of this *Code* or evidence that any material or method of construction does not conform to the requirements of this *Code*, or to substantiate claims for alternative construction systems, materials, or methods of construction, the AHJ shall be permitted to require tests for proof of compliance to be made by an approved agency at the expense of the owner or his/her agent.

1.4.7.2 Test methods shall be as specified by this *Code* for the material in question. If there are not appropriate test methods specified in this *Code*, the AHJ is authorized to accept an applicable test procedure from another recognized source.

1.4.7.3 Copies of the results of all such tests shall be retained in accordance with Section 1.11.

1.5 Units.

1.5.1 International System of Units. Metric units of measurement in this *Code* are in accordance with the modernized metric system known as the International System of Units (SI).

1.5.2 Primary and Equivalent Values. If a value for a measurement as given in this *Code* is followed by an equivalent value in other units, the first stated value shall be regarded as the requirement. A given equivalent value could be approximate.

1.6 Enforcement. This *Code* shall be administered and enforced by the AHJ designated by the governing authority. *(See Annex C for sample wording for enabling legislation.)*

1.7 Authority.

1.7.1 Administration. The provisions of this *Code* shall apply without restriction, unless specifically exempted.

1.7.2* Minimum Qualifications to Enforce this *Code*. The AHJ shall adopt minimum qualifications for all persons assigned the responsibility of administering and enforcing this *Code*.

1.7.3 Interpretations.

1.7.3.1 The AHJ is authorized to render interpretations of this *Code* and to make and enforce rules and supplemental regulations in order to carry out the application and intent of its provisions.

1.7.3.2 Such interpretations, rules, and regulations shall be in conformance with the intent and purpose of this *Code* and shall be available to the public during normal business hours.

1.7.4 Enforcement Assistance. Police and other enforcement agencies shall have authority to render necessary assistance in the enforcement of this *Code* when requested to do so by the AHJ.

1.7.5 Delegation of Authority. The AHJ shall be permitted to delegate to other qualified individuals such powers as necessary for the administration and enforcement of this *Code*.

1.7.6 Inspection.

1.7.6.1 The AHJ shall be authorized to inspect, at all reasonable times, any building or premises for dangerous or hazardous conditions or materials as set forth in this *Code*.

1.7.6.2 The AHJ shall have authority to order any person(s) to remove or remedy such dangerous or hazardous condition or material. Any person(s) failing to comply with such order shall be in violation of this *Code*.

1.7.6.3 To the full extent permitted by law, any AHJ engaged in fire prevention and inspection work shall be authorized at all reasonable times to enter and examine any building, structure, marine vessel, vehicle, or premises for the purpose of making fire safety inspections.

1.7.6.4 Before entering, the AHJ shall obtain the consent of the occupant thereof or obtain a court warrant authorizing entry for the purpose of inspection except in those instances where an emergency exists.

1.7.6.5 As used in 1.7.6.4, emergency means circumstances that the AHJ knows, or has reason to believe, exist and that can constitute immediate danger to life and property.

1.7.6.6 Persons authorized to enter and inspect buildings, structures, marine vessels, vehicles, and premises as herein set forth shall be identified by credentials issued by the governing authority.

1.7.7 Where conditions exist and are deemed hazardous to life and property by the AHJ, the AHJ shall have the authority to summarily abate such hazardous conditions that are in violation of this *Code*.

1.7.8 Interference with Enforcement. Persons shall not interfere or cause conditions that would interfere with an AHJ carrying out any duties or functions prescribed by this *Code*.

1.7.9 Impersonation. Persons shall not use a badge, uniform, or other credentials to impersonate the AHJ.

1.7.10 Investigation.

1.7.10.1 Authority. The AHJ shall have the authority to investigate the cause, origin, and circumstances of any fire, explosion, release of hazardous materials, or other hazardous condition.

1.7.10.2 Evidence. The AHJ shall have the authority to take custody of all physical evidence relating to the cause of the fire, explosion, release of hazardous materials, or other hazardous condition.

1.7.10.3 Limiting Access. The AHJ shall have the authority to limit access to emergencies or other similar situations.

1.7.10.4 Trade Secret. Information that could be related to trade secrets or processes shall not be made part of the public record except as could be directed by a court of law.

1.7.11 Plans and Specifications. The AHJ shall have the authority to require plans and specifications to ensure compliance with applicable codes and standards.

1.7.12 Inspection of Construction and Installation.

1.7.12.1 The AHJ shall be notified by the person performing the work when the installation is ready for a required inspection.

1.7.12.2 Whenever any installation subject to inspection prior to use is covered or concealed without having first been inspected, the AHJ shall have the authority to require that such work be exposed for inspection.

1.7.12.3 When any construction or installation work is being performed in violation of the plans and specifications as approved by the AHJ, a written notice shall be issued to the responsible party to stop work on that portion of the work that is in violation.

1.7.12.4 The notice shall state the nature of the violation, and no work shall be continued on that portion until the violation has been corrected.

1.7.13 Certificate of Occupancy. When the building code requires a certificate of occupancy, the certificate of occupancy shall not be issued until approved by the AHJ for fire code enforcement.

1.7.14 Stop Work or Evacuation.

1.7.14.1 The AHJ shall have the authority to order an operation or use stopped and the immediate evacuation of any occupied building or area when such building or area has hazardous conditions that present imminent danger.

1.7.14.2 Whenever any work is being done contrary to provisions of this *Code*, the AHJ is hereby authorized to order such work stopped.

1.7.14.3 Such work shall immediately stop until authorized by the AHJ to proceed.

1.7.15 Standby Fire Personnel.

1.7.15.1 The AHJ shall have the authority to require standby fire personnel or an approved fire watch when potentially hazardous conditions or a reduction in a life safety feature exist due to the type of performance, display, exhibit, occupancy, contest or activity, an impairment to a fire protection feature, or the number of persons present.

1.7.15.2* The owner, agent, or lessee shall employ one or more qualified persons, as required and approved, to be on duty.

1.7.15.2.1 The cost of standby fire personnel shall be at no cost to the AHJ.

1.7.15.3 Such standby fire personnel or fire watch personnel shall be subject to the AHJ's orders at all times and shall be identifiable and remain on duty during the times such places are open to the public, when such activity is being conducted, or as required by the AHJ.

1.7.16 Public Fire Education.

1.7.16.1 The AHJ shall have the authority to develop and implement a public fire safety education program as deemed necessary for the general welfare with respect to the potential fire hazards within the jurisdiction.

1.7.16.2 The AHJ shall have the authority to ensure duly authorized public fire safety education programs or public fire safety messages are disseminated to the general public.

1.8 Duties and Powers of the Incident Commander.

1.8.1 Authority. The incident commander conducting operations in connection with the extinguishment and control of any fire, explosion, hazardous materials incident, natural disaster, rescue, and/or other emergency shall have authority to direct all operations of fire extinguishment, mitigation of a hazardous materials incident, natural disaster, rescue, and/or control and to take necessary precautions to save life, protect property, and prevent further injury or damage.

1.8.2 Controlling Scene. During any emergency described in 1.8.1, including the investigation of the cause of such emergency, the incident commander or authorized representative shall be permitted to control or prohibit the approach to the scene of such emergency by any vehicle, vessel, or person.

1.8.3 Obstruction of Operations. No person shall obstruct the operations of the fire department or disobey any command of the incident commander or authorized representative or any part thereof, or any order of a police officer assisting the fire department.

1.8.4 Scene Barrier. The incident commander or authorized representative in charge of an emergency scene shall have the authority to establish barriers to control access in the vicinity of such emergency and to place, or cause to be placed, ropes, guards, barricades, or other obstructions across any street or alley to delineate such emergency scene barrier.

1.8.5 No person, except as authorized by the incident commander in charge of the emergency, shall be permitted to cross barriers established in accordance with 1.8.4.

1.9 Liability.

1.9.1 The AHJ, and other individuals charged by the AHJ or the incident commander with the control or extinguishment of any fire, the enforcement of this *Code* or any other official duties, acting in good faith and without malice in the discharge of their duties, shall not thereby be rendered personally liable for any damage that could accrue to persons or property as a result of any act or by reason of any act or omission in the discharge of their duties.

1.9.2 Any suit brought against the AHJ, the incident commander, or such individuals because of such act or omission performed in the enforcement of any provision of such codes or other pertinent laws or ordinances implemented through the enforcement of this *Code* or enforced by the code enforcement agency shall be defended by this jurisdiction until final termination of such proceedings, and any judgment resulting therefrom shall be assumed by this jurisdiction.

1.9.3 This *Code* shall not be construed to relieve from or lessen the responsibility of any person owning, operating, or controlling any building or structure for any damages to persons or property caused by defects, nor shall the code enforcement agency or its parent jurisdiction be held as assuming any such liability by reason of the inspections authorized by this *Code* or any permits or certificates issued under this *Code*.

1.10 Board of Appeals.

1.10.1 Establishment of Board of Appeals.

1.10.1.1 A Board of Appeals shall be established consisting of members and alternate members who shall be appointed by the appointing official of the jurisdiction by reason of education, experience, and knowledge and are deemed to be competent to sit in judgment on matters concerning this *Code* and its enforcement.

1.10.1.2 No more than one of said members or their alternates shall be engaged in the same business, profession, or line of endeavor.

1.10.1.3 The members shall serve for a term of three years, except for the initial appointees who shall serve as follows: two for a term of one year, two for a term of two years, and three for a term of three years.

1.10.1.4 All members and any alternate members shall be appointed and shall serve in accordance with the terms and conditions of the AHJ.

1.10.2 Rules of Board of Appeals. The Board of Appeals shall establish rules and regulations for conducting its business and shall render all decisions and findings in writing to the AHJ, with a copy to the appellant.

1.10.3 Conflicts of Interest.

1.10.3.1 Board of Appeals members shall not be officers, agents, or employees of the jurisdiction.

1.10.3.2 No member of the Board of Appeals shall sit in judgment on any case in which the member, personally, is directly interested.

1.10.4 Duties of Board of Appeals.

1.10.4.1 The Board of Appeals shall provide for reasonable interpretation of the provisions of this *Code* and rule on appeals from decisions of the AHJ.

1.10.4.2 The ruling of the Board of Appeals shall ensure that the intent of the *Code* is complied with and public safety is secured.

1.10.4.3 The Board of Appeals shall be permitted to grant alternatives or modifications through the procedures outlined in Section 1.4 of this *Code*.

1.10.4.4 The Board of Appeals shall not have the authority to waive the requirements of this *Code*.

1.10.5 Meetings of Board of Appeals.

1.10.5.1 The Board of Appeals shall meet whenever directed by the appointing authority to interpret the provisions of this *Code* and to consider and rule on any properly filed appeal from a decision of the AHJ, giving at least five days' notice of hearing, but in no case shall it fail to meet on an appeal within 30 calendar days of the filing of notice of appeal.

1.10.5.2 All of the meetings of the Board of Appeals shall be open to the public.

1.10.6 Quorum. Two-thirds, but not less than four members, of the Board of Appeals shall constitute a quorum. In varying the application of any provision of this *Code*, or in modifying an order of the AHJ, a majority vote shall be required.

1.10.7 Meetings and Records.

1.10.7.1 Meetings of the Board of Appeals shall be held at the call of the chair and at such other times as the board determines.

1.10.7.2 All hearings before the Board of Appeals shall be open to the public.

1.10.7.3 The Board of Appeals shall keep minutes of its proceedings showing the vote of each member on every question, or if the member is absent or fails to vote, indicating such actions.

1.10.7.4 The Board of Appeals shall also keep records of its examinations and other official actions.

1.10.7.5 Minutes and records of the Board of Appeals shall be public record.

1.10.8 Procedures. The Board of Appeals shall establish rules and regulations for its own procedures consistent with the provisions of this *Code*.

1.10.9 Means of Appeals.

1.10.9.1 Any person shall be permitted to appeal a decision of the AHJ to the Board of Appeals when it is claimed that any one or more of the following conditions exist:

(1) The true intent of the codes or ordinances described in this *Code* has been incorrectly interpreted.
(2) The provisions of the codes or ordinances do not fully apply.
(3) A decision is unreasonable or arbitrary as it applies to alternatives or new materials.

1.10.9.2 An appeal shall be submitted to the AHJ in writing within 30 calendar days of notification of violation outlining the *Code* provision from which relief is sought and the remedy proposed.

1.10.9.3* All documentation supporting an appeal shall be submitted to the AHJ.

1.11 Records and Reports.

1.11.1 A record of examinations, approvals, equivalencies, and alternates shall be maintained by the AHJ and shall be available for public inspection during business hours in accordance with applicable laws.

1.11.2 The AHJ shall keep a record of all fire prevention inspections, including the date of such inspections and a summary of any violations found to exist, the date of the services of notices, and a record of the final disposition of all violations.

1.11.3 Emergency Response Records.

1.11.3.1 The fire department shall keep a record of fire and other emergency responses occurring within its jurisdiction and of facts concerning the same, including statistics as to the extent and damage caused by such fires or emergencies.

1.11.3.2 The fire department shall report its incident record data, collected in accordance with 1.11.3, to the recognized state agency responsible for collecting such data.

1.11.4 All records required to be kept shall be maintained until their usefulness has been served or as required by law.

1.12 Permits and Approvals.

1.12.1 The AHJ shall be authorized to establish and issue permits, certificates, and approvals pertaining to conditions, operations, or materials hazardous to life or property pursuant to Section 1.12.

1.12.2 Applications for permits shall be made to the AHJ on forms provided by the jurisdiction and shall include the applicant's answers in full to inquiries set forth on such forms.

1.12.2.1 Applications for permits shall be accompanied by such data as required by the AHJ and fees as required by the jurisdiction.

1.12.2.2 The AHJ shall review all applications submitted and issue permits as required.

1.12.2.3 If an application for a permit is rejected by the AHJ, the applicant shall be advised of the reasons for such rejection.

1.12.2.4 Permits for activities requiring evidence of financial responsibility by the jurisdiction shall not be issued unless proof of required financial responsibility is furnished.

1.12.3 Approvals by Other Authorities Having Jurisdiction.

1.12.3.1 The AHJ shall have the authority to require evidence to show that other regulatory agencies having jurisdiction over the design, construction, alteration, repair, equipment, maintenance, process, and relocation of structures have issued appropriate approvals.

1.12.3.2 The AHJ shall not be held responsible for enforcement of the regulations of such other regulatory agencies unless specifically mandated to enforce those agencies' regulations.

1.12.4 Misrepresentation.

1.12.4.1 Any attempt to misrepresent or otherwise deliberately or knowingly design; install; service; maintain; operate; sell; represent for sale; falsify records, reports, or applications; or other related activity in violation of the requirements prescribed by this *Code* shall be a violation of this *Code*.

1.12.4.2 Such violations shall be cause for immediate suspension or revocation of any related approvals, certificates, or permits issued by this jurisdiction.

1.12.4.3 Such violations shall be subject to any other criminal or civil penalties as available by the laws of this jurisdiction.

1.12.5 A permit shall be predicated upon compliance with the requirements of this *Code* and shall constitute written authority issued by the AHJ to maintain, store, use, or handle materials, or to conduct processes that could produce conditions hazardous to life or property, or to install equipment used in connection with such activities.

1.12.6 Any permit issued under this *Code* shall not take the place of any other approval, certificate, license, or permit required by other regulations or laws of this jurisdiction.

1.12.7 Where additional permits, approvals, certificates, or licenses are required by other agencies, approval shall be obtained from those other agencies.

1.12.8 The AHJ shall have the authority to require an inspection prior to the issuance of a permit.

1.12.9 A permit issued under this *Code* shall continue until revoked or for the period of time designated on the permit.

1.12.10 The permit shall be issued to one person or business only and for the location or purpose described in the permit.

1.12.11 Any change that affects any of the conditions of the permit shall require a new or amended permit.

1.12.12 The AHJ shall have the authority to grant an extension of the permit time period upon presentation by the permittee of a satisfactory reason for failure to start or complete the work or activity authorized by the permit.

1.12.13 A copy of the permit shall be posted or otherwise readily accessible at each place of operation and shall be subject to inspection as specified by the AHJ.

1.12.14 Any activity authorized by any permit issued under this *Code* shall be conducted by the permittee or the permittee's agents or employees in compliance with all requirements of this *Code* applicable thereto and in accordance with the approved plans and specifications.

1.12.15 No permit issued under this *Code* shall be interpreted to justify a violation of any provision of this *Code* or any other applicable law or regulation.

1.12.16 Any addition or alteration of approved plans or specifications shall be approved in advance by the AHJ, as evidenced by the issuance of a new or amended permit.

1.12.17* Permits shall be issued by the AHJ and shall bear the name and signature of the AHJ or that of the AHJ's designated representative. In addition, the permit shall indicate the following:

(1) Operation or activities for which the permit is issued
(2) Address or location where the operation or activity is to be conducted
(3) Name and address of the permittee
(4) Permit number and date of issuance
(5) Period of validity of the permit
(6) Inspection requirements and other permit conditions

1.12.18 Any application for, or acceptance of, any permit requested or issued pursuant to this *Code* shall constitute agreement and consent by the person making the application or accepting the permit to allow the AHJ to enter the premises at any reasonable time to conduct such inspections as required by this *Code*.

1.12.19 Revocation or Suspension of Permits.

1.12.19.1 The AHJ shall be permitted to revoke or suspend a permit or approval issued if any violation of this *Code* is found upon inspection or in case any false statements or misrepresentations have been submitted in the application or plans on which the permit or approval was based.

1.12.19.2 Revocation or suspension shall be constituted when the permittee is duly notified by the AHJ.

1.12.19.3 Any person who engages in any business, operation, or occupation, or uses any premises, after the permit issued therefore has been suspended or revoked pursuant to the provisions of this *Code*, and before such suspended permit has been reinstated or a new permit issued, shall be in violation of this *Code*.

1.12.20 Permits shall be required in accordance with Table 1.12.20(a) through Table 1.12.20(d).

Table 1.12.20(a) Permit Requirements

Operations and Materials	Permit Required	Cross Reference Section No.
Aerosol Products	To store or handle an aggregate quantity of Level 2 or Level 3 aerosol products in excess of 500 lb (226.8 kg)	61.1.2.3
Aircraft Fuel Servicing	To provide aircraft fuel servicing	42.4.1.2
Aircraft Hangars	For servicing or repairing aircraft	21.1.1
Aircraft Refueling Vehicles	To operate aircraft refueling vehicles	42.4.1.2
Airport Terminal Buildings	For construction and alteration	21.2.2.1
Ammonium Nitrate	For storage	65.10.2
Amusement Parks	For construction, alteration, or operation of amusement park fire protection safety features	10.15.1
Asbestos Removal	For the removal of asbestos	16.8.2
Automatic Fire Suppression Systems	For installation or modification	13.1.1.1; 50.4.2
Automobile Wrecking Yards	To operate automobile wrecking yards	22.2
Automotive Fuel Servicing	To provide automotive fuel servicing	42.2.2.1; 42.5.2.2.4; 42.5.3.1
Battery System	To install or operate stationary lead-acid battery systems having an electrolyte capacity of more than 100 gal (379 L) in sprinklered buildings or 50 gal (189 L) in nonsprinklered buildings	52.2
Candles, Open Flames, and Portable Cooking	To use in connection with assembly areas, dining areas of restaurants, or drinking establishments	17.3.4.6.1; 20.1.4.2.4.1
Carnivals and Fairs	To conduct a carnival or fair	10.15.1
Cellulose Nitrate Film	To store, handle, use, or display	20.15.6.2
Cellulose Nitrate Plastic	To store or handle more than 25 lb (11.3 kg)	43.1.1.4
Cleanrooms	For construction, alternation, or operation	23.3
Combustible Fibers	For storage or handling of combustible fibers greater than 100 ft^3 (2.8 m^3)	45.1.3
Combustible Material Storage	To store more than 2500 ft^3 (70.8 m^3) gross volume	10.19.2; 19.1.1; 31.2
Commercial Rubbish-Handling Operation	To operate	19.1.1

Table 1.12.20(a) ***Continued***

Operations and Materials	Permit Required	Cross Reference Section No.
Compressed Gases	To store, use, or handle compressed gases in excess of the amounts listed in Table 1.12.20(b). When the compressed gases in use or storage exceed the amounts listed in Table 1.12.20(b), a permit is required to install, repair damage to, abandon, remove, place temporarily out of service, close, or substantially modify a compressed gas system. For additional permit requirements for compressed gases facility closures, see 63.1.2.	63.1.2
Consumer Fireworks (1.4G)	1. For the sale, on-site handling, and manufacture of consumer fireworks (1.4G) 2. For the storage of consumer fireworks (1.4G) in excess of the amount listed in Table 1.12.20(d)	65.5.2 65.11.3.2
Covered Mall Buildings	Annual requirement for facilities that utilize mall area for exhibits or displays with 4 conditions	20.1.4.5.1
Crop Maze	To operate a crop maze	10.15.11
Cryogens	To produce, store, or handle cryogens in excess of amounts listed in Table 1.12.20(c) *Exception: Where federal or state regulations apply or for fuel systems of a vehicle.*	63.1.2
Cutting and Welding Operation	For operations within a jurisdiction	17.3.4.6.1; 41.1.5; 41.3.1.2; 41.3.3.1
Display Fireworks (1.3G)	For possession, transportation, storage, manufacture, sale, handling, and discharge of display fireworks within the jurisdiction	65.2.3; 65.5.2
Drycleaning Plants	To engage in business of drycleaning or to change to a more hazardous cleaning solvent	24.2
Dust-Producing Operations	To operate a grain elevator, flour mill, starch mill, feed mill, or plant pulverizing aluminum, coal, cocoa, magnesium, spices, sugar, or other similar combustible material	40.2
Exhibit and Trade Shows	For operation of all exhibits and trade shows held within a jurisdiction	20.1.4.5.1
Explosives	Manufacture, sell, dispose, purchase, storage, use, possess, or transport of explosives within the jurisdiction. For additional permit requirements for blasting operations, see 65.9.2	65.9.2
Fire Alarm and Detection Systems and Related Equipment	Installation or modification to fire alarm and detection systems and related equipment[a]	13.1.1.1
Fire Hydrants and Water-Control Valves	To use a fire hydrant or operate a water-control valve intended for fire suppression purposes	13.1.1.1
Fire Pumps and Related Equipment	Installation of or modification to fire pumps, jockey pumps, controllers, and generators[a]	13.1.1.1
Flame Effects	Use of flame effects before an audience	65.4.2

(continues)

Table 1.12.20(a) ***Continued***

Operations and Materials	Permit Required	Cross Reference Section No.
Flammable and Combustible Liquids	1. To use or operate, repair, or modify a pipeline for the on-site transportation of flammable or combustible liquids 2. To store, handle, or use Class I liquids in excess of 5 gal (18.9 L) in a building or in excess of 10 gal (37.9 L) outside of a building. *Exception to item (2): A permit is not required for the following:* *(a) The storage or use of Class I liquids in the fuel tank of a motor vehicle, aircraft, motorboat, mobile power plant, or mobile heating plant unless such storage in the opinion of the chief would cause an unsafe condition* *(b) The storage or use of paints, oils, varnishes, or similar flammable mixtures when such liquids are stored for maintenance, painting, or similar purposes for a period of not more than 30 days* 3. To store, handle, or use Class II or Class III-A liquids in excess of 25 gal (94.6 L) in a building or in excess of 60 gal (227.1 L) outside a building. *Exception to item (3): Fuel oil used in connection with oil-burning equipment* 4. To remove Class I or Class II liquids from an underground storage tank used for fueling motor vehicles by any means other than the approved, stationary on-site pumps normally used for dispensing purposes 5. To install, construct, alter, or operate tank vehicles, equipment, tanks, plants, terminals, wells, fuel-dispensing stations, refineries, distilleries, and similar facilities where flammable and combustible liquids are produced, processed, transported, stored, dispensed, or used 6. To install, alter, clean, repair, line with a protective coating, remove, abandon, place temporarily out of service, or otherwise dispose of a flammable or combustible liquid tank 7. To change the type of contents stored in a flammable or combustible liquid tank to a material other than those for which the tank was designed and constructed	66.1.5
Fruit Ripening	To operate a fruit-ripening process	60.1.6.1.1; 63.1.2
General Storage	To store materials indoors or outdoors, representing a broad range of combustibles, including plastics, rubber tires, and roll paper.	34.1.2
Grandstands, Bleachers, and Folding and Telescopic Seating	For construction, location, erection, or placement of grandstands, bleachers, and folding and telescopic seating	25.1.2
Hazardous Materials	To store, transport on site, dispense, use, or handle hazardous materials in excess of the amounts listed in Table 1.12.20(d) or to install, repair, abandon, remove, place temporarily out of service, close, or substantially modify a storage facility or other area regulated by Chapter 60 when the hazardous materials in use or storage exceed the amounts listed in Table 1.12.20(d)	60.1.6.1.1

Table 1.12.20(a) ***Continued***

Operations and Materials	Permit Required	Cross Reference Section No.
High-Piled Combustible Storage	To use any building or portion thereof as a high-piled storage area exceeding 500 ft^2 (46.45 m^2)	20.15.7.1.1
High-Powered Rocketry	For the manufacturing, sale, and use of high-powered rocketry	65.8.2; 65.7.2
Hot Work Operations	To conduct hot work	17.3.4.6.1; 41.1.5; 41.3.3.1
Industrial Ovens and Furnaces	For operation of industrial ovens and furnaces covered by Chapter 51	51.1.2.1
Laboratories	For construction, alteration, or operation	26.3
Liquefied Petroleum Gases	1. To store, use, handle, or dispense LP-Gas of 125 gal (0.5 m^3) (water capacity) aggregate capacity or greater 2. To install or modify LP-Gas systems	42.5.2.2.4 69.1.2
Liquid- or Gas-Fueled Vehicles	To display, compete, or demonstrate liquid- or gas-fueled vehicles or equipment in assembly buildings	20.1.4.5.1
Lumberyards and Woodworking Plants	For storage of lumber exceeding 100,000 board ft	31.2
Marine Craft Fuel Servicing	To provide marine craft fuel servicing	42.3.1.4
Membrane Structures, Tents, and Canopies — Permanent	For construction, location, erection, or placement	25.1.2
Membrane Structures, Tents, and Canopies — Temporary	To erect or operate an air-supported temporary membrane structure or tent having an area in excess of 200 ft^2 (18.6 m^2) or a canopy in excess of 400 ft^2 (37.2 m^2) *Exception: Temporary membrane structures, tents, or canopy structures used exclusively for camping*	25.1.2
Motion Picture and Television Production Studio Soundstages and Approved Production Facilities	To design, construct, operate, and maintain soundstages and approved production facilities used in motion picture and television industry productions.	32.2
Oil- and Gas-Fueled Heating Appliances	To install oil- and gas-fired heating appliances	11.5.1.6
Open Burning	To conduct open burning. For additional permit requirements for open burning, see 10.11.1	10.11.1
Open Fires	For kindling or maintaining an open fire. For additional permit requirements for open fires, see 10.11.4[b]	10.11.1
Organic Coatings	For operation and maintenance of a facility that manufactures organic coatings	43.1.1.4
Organic Peroxide Formulations	To store, transport on site, use, or handle materials in excess of amounts listed in Tables 1.12.20(c) and (d)	70.1.2
Outside Storage of Tires	To store more than 500 tires outside	33.1.2
Oxidizers	To store, transport on site, use, or handle materials in excess of amounts listed in Tables 1.12.20(c) and (d)	70.1.2
Parade Floats	To use a parade float for public performance, presentation, spectacle, entertainment, or parade	10.17.1

(continues)

Table 1.12.20(a) *Continued*

Operations and Materials	Permit Required	Cross Reference Section No.
Places of Assembly	To operate a place of assembly	10.15.1; 20.1.1
Pyrotechnic Articles	For the manufacture, storage, sale, or use of pyrotechnic articles within the jurisdiction	65.2.3; 65.3.3; 65.5.2; 65.11.3.2
Pyrotechnics Before a Proximate Audience	For the display and use of pyrotechnic materials before a proximate audience	65.3.3
Pyroxylin Plastics	For storage, handling, assembly, or manufacture of pyroxylin plastics	43.1.1.4
Private Fire Hydrants	For installation, modification, or removal from service of any private fire hydrants	13.1.1.1
Refrigeration Equipment	To install or operate a mechanical refrigeration unit or system regulated by this *Code*	53.4.1
Repair Garages and Service Stations	For operation of service stations and repair garages	30.1.1.3; 30.2.1.1
Rocketry Manufacturing	For the manufacturing of model rocket motors	65.7.2
Rooftop Heliports	For construction, modification, or operation of a rooftop heliport	21.3.2.1
Solvent Extraction	For storage, use, and handling	44.3
Spraying or Dipping of Flammable Finish	For installation or modification of any spray room, spray booth, or preparation work station, or to conduct a spraying or dipping operation utilizing flammable or combustible liquids or powder coating	43.1.1.4
Standpipe Systems	For installation, modification, or removal from service of any standpipe system[a]	13.1.1.1
Special Outdoor Events	For the location and operation of special outdoor events	10.15.1
Tar Kettles	To place a tar kettle, a permit must be obtained prior to the placement of a tar kettle	16.7.1.2; 17.3.4.6.1
Tire-Rebuilding Plants	For operation and maintenance of a tire-rebuilding plant	34.1.2
Tire Storage	To use an open area or portion thereof to store tires in excess of 500 tires	33.1.2; 34.1.2
Torch-Applied Roofing Operation	For the use of a torch for application of roofing materials	16.6.1
Wildland Fire–Prone Areas	For use of hazardous areas within fire-prone areas	17.3.2
Wood Products	To store wood chips, hogged material, wood by-products, lumber, or plywood in excess of 200 ft^3 (5.7 m^3)	31.2

[a]Maintenance performed in accordance with this *Code* is not considered a modification and does not require a permit.
[b]Cooking and recreational fires are exempt and do not require a permit.

Table 1.12.20(b) Permit Amounts for Compressed Gases

Type of Gas	Amount* ft^3	Amount* m^3
Corrosive	200	0.57
Flammable	200	0.57
Highly toxic	Any amount	
Inert and simple asphyxiant	6000	169.9
Oxidizing (including oxygen)	504	14.3
Pyrophoric	Any amount	
Toxic	Any amount	
Unstable (reactive)	Any amount	

Note: See Chapters 41, 42, 60, 63, and 69 for additional requirements and exceptions.
*Cubic feet measured at normal temperature and pressure.

Table 1.12.20(c) Permit Amounts for Cryogens

Type of Cryogen	Inside Building (gal)	Outside Building (gal)
Corrosive	Over 1	Over 1
Flammable	Over 1	60
Toxic/Highly toxic	Over 1	Over 1
Nonflammable	60	500
Oxidizer (includes oxygen)	10	50

Note: See Chapter 63.

Table 1.12.20(d) Permit Amounts for Hazardous Materials

Type of Material	Amount U.S. Unit	Amount Metric Unit
Cellulose nitrate	25 lb	11.3 kg
Combustible fiber	100 ft^3	2.8 m^3
Combustible liquids	See Table 1.12.20(a)	
Consumer fireworks (1.4G)	10 lb	4.5 kg*
Corrosive gases	See Table 1.12.20(b)	
Corrosive liquids	55 gal	208 L
Corrosive solids	500 lb	227 kg
Cryogens	See Table 1.12.20(c)	
Display fireworks (1.3G)	Any amount	
Explosives	Any amount	
Flammable gases	See Table 1.12.20(b)	
Flammable liquids	See Table 1.12.20(a)	
Flammable solids	100 lb	45.4 kg
Highly toxic gases	See Table 1.12.20(b)	
Highly toxic liquids	Any amount	
Highly toxic solids	Any amount	
LP-Gas	See Table 1.12.20(b)	
Nitrate film (cellulose)	Any amount	
Organic peroxides:	See Table 1.12.20(a)	

Table 1.12.20(d) *Continued*

Type of Material	Amount U.S. Unit	Amount Metric Unit
Class I	Any amount	
Class II	Any amount	
Class III	10 lb	4.5 kg
Class IV	20 lb	9 kg
Class V	Not required	
Unclassified detonatable	Any amount	
Oxidizing gases	See Table 1.12.20(b)	
Oxidizing liquids:	See Table 1.12.20(a)	
Class 4	Any amount	
Class 3	1 gal	3.8 L
Class 2	10 gal	38 L
Class 1	55 gal	208 L
Oxidizing solids:	See Table 1.12.20(a)	
Class 4	Any amount	
Class 3	10 lb	4.5 kg
Class 2	100 lb	45 kg
Class 1	500 lb	227 kg
Pyrophoric gases	See Table 1.12.20(b)	
Pyrophoric liquids	Any amount	
Pyrophoric solids	Any amount	
Toxic gases	See Table 1.12.20(b)	
Toxic liquids	10 gal	38 L
Toxic solids	100 lb	45 kg
Unstable (reactive) gases	See Table 1.12.20(b)	
Unstable (reactive) liquids:		
Class 4	Any amount	
Class 3	Any amount	
Class 2	5 gal	19 L
Class 1	10 gal	38 L
Unstable (reactive) solids:		
Class 4	Any amount	
Class 3	Any amount	
Class 2	50 lb	22.7 kg
Class 1	100 lb	45 kg
Water reactive liquids:		
Class 3	Any amount	
Class 2	5 gal	19 L
Class 1	10 gal	38 L
Water reactive solids:		
Class 3	Any amount	
Class 2	50 lb	22.7 kg
Class 1	100 lb	45 kg

Note: See Chapter 60 for additional requirements and exceptions.
*Unless the actual weight of the pyrotechnic composition of the consumer fireworks, 1.4G, is known, 25 percent of the gross weight of the fireworks, including packaging, is permitted to be used to determine the weight of the fireworks for the purpose of this table.

1.13 Certificates of Fitness.

1.13.1 Authorization. The AHJ shall have the authority to require certificates of fitness and collect fees for individuals or companies performing activities related to fire or life safety within the jurisdiction such as the following:

(1) Use of explosive materials
(2) Blasting or demolition operations
(3) Fireworks displays
(4) Inspection, servicing, or recharging of portable fire extinguishers
(5) Installation, servicing, or recharging of fixed fire extinguishing systems
(6) Installation or servicing of fire alarm or fire communication systems
(7) Servicing of gas- or oil-burning heating systems
(8) Chimney sweep operations
(9) Installation, inspection, or servicing of range-hood systems

1.13.2 Where certificates of fitness are required, the AHJ shall be responsible for their issuance.

1.13.3 All applications for a certificate of fitness shall be filed with the AHJ on forms provided by the AHJ.

1.13.4 Every individual or company applying for a certificate of fitness shall furnish evidence to the AHJ of familiarity with the codes and standards for which the certificate of fitness is issued.

1.13.5 Investigation of Applicant.

1.13.5.1 The AHJ shall investigate every application for a certificate of fitness.

1.13.5.2 The investigation shall include an examination of the applicant's experience and training in the field of the certificate of fitness for which application has been made.

1.13.5.3 When the AHJ determines that an applicant is not fit to receive the certificate of fitness because of the applicant's inability to comply with the provisions of this *Code*, the AHJ shall refuse to issue the certificate of fitness.

1.13.5.4 If the refusal is based on the applicant's inability to pass an examination given to determine competency, the applicant shall not be permitted to apply again for the certificate of fitness within a 10-day period following the examination.

1.13.6 Certificates of fitness shall not be transferable.

1.13.7 Certificates of fitness shall be issued for the period of time as indicated on the certificate of fitness as determined by the AHJ, but such period of time shall not exceed 3 years.

1.13.8 Applications for renewal of a certificate of fitness shall be filed in the same manner as an application for an original certificate.

1.13.9 Each individual or company holding a certificate of fitness shall notify the AHJ in writing of any address change within 10 days after such change.

1.13.10 A certificate of fitness shall be in the form of an identification card. The card shall contain the following information:

(1) Purpose for which the certificate of fitness is issued
(2) Date of expiration
(3) Information necessary to easily identify the individual to whom the certificate of fitness is issued
(4) Signature of the individual to whom the certificate of fitness is issued
(5) Name and signature of the AHJ or a designated representative
(6) Statement printed thereon in bold type the following:

THIS CERTIFICATE IS NOT AN ENDORSEMENT OF THIS INDIVIDUAL OR COMPANY BY THE AUTHORITY HAVING JURISDICTION.

1.13.11 Any individual or company to whom a certificate of fitness has been granted shall, upon request, produce and show proper identification and the certificate of fitness to anyone for whom that individual seeks to render services or to the AHJ.

1.13.12 Revocation.

1.13.12.1 The AHJ shall be permitted to revoke or suspend a certificate of fitness issued if any violation of this *Code* is found upon inspection or where any false statements or misrepresentations are submitted in the application on which the approval was based.

1.13.12.2 Revocation or suspension shall be constituted when the certificate holder is duly notified by the AHJ.

1.13.12.3 Failure on the part of an individual to give such notification of a change of address required by 1.13.9 shall constitute grounds for revocation of the certificate of fitness.

1.14 Plan Review.

1.14.1* Where required by the AHJ for new construction, modification, or rehabilitation, construction documents and shop drawings shall be submitted, reviewed, and approved prior to the start of such work as provided in Section 1.14.

1.14.2 The applicant shall be responsible to ensure that the following conditions are met:

(1) The construction documents include all of the fire protection requirements.
(2) The shop drawings are correct and in compliance with the applicable codes and standards.
(3) The contractor maintains an approved set of construction documents on site.

1.14.3 It shall be the responsibility of the AHJ to promulgate rules that cover the following:

(1) Criteria to meet the requirements of Section 1.14
(2) Review of documents and construction documents within established time frames for the purpose of acceptance or providing reasons for nonacceptance

1.14.4 Review and approval by the AHJ shall not relieve the applicant of the responsibility of compliance with this *Code*.

1.14.5 When required by the AHJ, revised construction documents or shop drawings shall be prepared and submitted for review and approval to illustrate corrections or modifications necessitated by field conditions or other revisions to approved plans.

1.15* Technical Assistance.

1.15.1 The AHJ shall be permitted to require a review by an independent third party with expertise in the matter to be reviewed at the submitter's expense.

1.15.2 The independent reviewer shall provide an evaluation and recommend necessary changes of the proposed design, operation, process, or new technology to the AHJ.

1.15.3 The AHJ shall be authorized to require design submittals to bear the stamp of a professional engineer.

1.15.4 The AHJ shall make the final determination as to whether the provisions of this *Code* have been met.

1.16 Notice of Violations and Penalties.

1.16.1 Whenever the AHJ determines violations of this *Code*, a written notice shall be issued to confirm such findings.

1.16.2 Serving Notice.

1.16.2.1 Any order or notice issued pursuant to this *Code* shall be served upon the owner, operator, occupant, or other person responsible for the condition or violation, either by personal service, by mail, or by delivering the same to, and leaving it with, some person of responsibility upon the premises.

1.16.2.2 For unattended or abandoned locations, a copy of such order or notice shall be posted on the premises in a conspicuous place at or near the entrance to such premises and the order or notice shall be mailed by registered or certified mail, with return receipt requested, to the last known address of the owner, occupant, or both or publication in a newspaper of general circulation wherein the subject premise is located.

1.16.3 Any person who mutilates, destroys, or removes posted orders or notices without the authorization of the AHJ shall be subject to the penalties established by the jurisdiction.

1.16.4 Any person who fails to comply with the provisions of this *Code* or who fails to carry out an order made pursuant of this *Code* or violates any condition attached to a permit, approval, or certificate shall be subject to the penalties established by the jurisdiction.

1.16.5 Failure to comply with the time limits of an abatement notice or other corrective notice issued by the AHJ shall result in each day that such violation continues being regarded as a new and separate offense.

Chapter 2 Referenced Publications

2.1 General. The documents or portions thereof listed in this chapter are referenced within this code and shall be considered part of the requirements of this document.

2.2 NFPA Publications. National Fire Protection Association, 1 Batterymarch Park, Quincy, MA 02169-7471.

NFPA 10, *Standard for Portable Fire Extinguishers,* 2002 edition.

NFPA 11, *Standard for Low-, Medium-, and High-Expansion Foam,* 2005 edition.

NFPA 12, *Standard on Carbon Dioxide Extinguishing Systems,* 2005 edition.

NFPA 12A, *Standard on Halon 1301 Fire Extinguishing Systems,* 2004 edition.

NFPA 13, *Standard for the Installation of Sprinkler Systems,* 2002 edition.

NFPA 13D, *Standard for the Installation of Sprinkler Systems in One- and Two-Family Dwellings and Manufactured Homes,* 2002 edition.

NFPA 13R, *Standard for the Installation of Sprinkler Systems in Residential Occupancies up to and Including Four Stories in Height,* 2002 edition.

NFPA 14, *Standard for the Installation of Standpipe and Hose Systems,* 2003 edition.

NFPA 15, *Standard for Water Spray Fixed Systems for Fire Protection,* 2001 edition.

NFPA 16, *Standard for the Installation of Foam-Water Sprinkler and Foam-Water Spray Systems,* 2003 edition.

NFPA 17, *Standard for Dry Chemical Extinguishing Systems,* 2002 edition.

NFPA 17A, *Standard for Wet Chemical Extinguishing Systems,* 2002 edition.

NFPA 20, *Standard for the Installation of Stationary Pumps for Fire Protection,* 2003 edition.

NFPA 22, *Standard for Water Tanks for Private Fire Protection,* 2003 edition.

NFPA 24, *Standard for the Installation of Private Fire Service Mains and Their Appurtenances,* 2002 edition.

NFPA 25, *Standard for the Inspection, Testing, and Maintenance of Water-Based Fire Protection Systems,* 2002 edition.

NFPA 30, *Flammable and Combustible Liquids Code,* 2003 edition.

NFPA 30A, *Code for Motor Fuel Dispensing Facilities and Repair Garages,* 2003 edition.

NFPA 30B, *Code for the Manufacture and Storage of Aerosol Products,* 2002 edition.

NFPA 31, *Standard for the Installation of Oil-Burning Equipment,* 2001 edition.

NFPA 32, *Standard for Drycleaning Plants,* 2004 edition.

NFPA 33, *Standard for Spray Application Using Flammable or Combustible Materials,* 2003 edition.

NFPA 34, *Standard for Dipping and Coating Processes Using Flammable or Combustible Liquids,* 2003 edition.

NFPA 35, *Standard for the Manufacture of Organic Coatings,* 2005 edition.

NFPA 36, *Standard for Solvent Extraction Plants,* 2004 edition.

NFPA 37, *Standard for the Installation and Use of Stationary Combustion Engines and Gas Turbines,* 2002 edition.

NFPA 40, *Standard for the Storage and Handling of Cellulose Nitrate Film,* 2001 edition.

NFPA 45, *Standard on Fire Protection for Laboratories Using Chemicals,* 2004 edition.

NFPA 51, *Standard for the Design and Installation of Oxygen–Fuel Gas Systems for Welding, Cutting, and Allied Processes,* 2002 edition.

NFPA 51A, *Standard for Acetylene Cylinder Charging Plants,* 2001 edition.

NFPA 51B, *Standard for Fire Prevention During Welding, Cutting, and Other Hot Work,* 2003 edition.

NFPA 52, *Vehicular Fuel Systems Code,* 2006 edition.

NFPA 54, *National Fuel Gas Code,* 2006 edition.

NFPA 55, *Standard for the Storage, Use, and Handling of Compressed Gases and Cryogenic Fluids in Portable and Stationary Containers, Cylinders, and Tanks,* 2005 edition.

NFPA 58, *Liquefied Petroleum Gas Code,* 2004 edition.

NFPA 59, *Utility LP-Gas Plant Code,* 2004 edition.

NFPA 59A, *Standard for the Production, Storage, and Handling of Liquefied Natural Gas (LNG),* 2006 edition.

NFPA 61, *Standard for the Prevention of Fires and Dust Explosions in Agricultural and Food Processing Facilities,* 2002 edition.

NFPA 69, *Standard on Explosion Prevention Systems,* 2002 edition.

NFPA 70, *National Electrical Code®,* 2005 edition.

NFPA 72®, National Fire Alarm Code®, 2002 edition.

NFPA 80, *Standard for Fire Doors and Fire Windows,* 1999 edition.

NFPA 82, *Standard on Incinerators and Waste and Linen Handling Systems and Equipment,* 2004 edition.

NFPA 85, *Boiler and Combustion Systems Hazards Code,* 2004 edition.

NFPA 86, *Standard for Ovens and Furnaces,* 2003 edition.

NFPA 88A, *Standard for Parking Structures,* 2002 edition.

NFPA 90A, *Standard for the Installation of Air-Conditioning and Ventilating Systems,* 2002 edition.

NFPA 90B, *Standard for the Installation of Warm Air Heating and Air-Conditioning Systems,* 2006 edition.

NFPA 91, *Standard for Exhaust Systems for Air Conveying of Vapors, Gases, Mists, and Noncombustible Particulate Solids,* 2004 edition.

NFPA 96, *Standard for Ventilation Control and Fire Protection of Commercial Cooking Operations,* 2004 edition.

NFPA 99, *Standard for Health Care Facilities,* 2005 edition.

NFPA *101®*, *Life Safety Code®*, 2006 edition.

NFPA 102, *Standard for Grandstands, Folding and Telescopic Seating, Tents, and Membrane Structures,* 1995 edition.

NFPA 110, *Standard for Emergency and Standby Power Systems,* 2005 edition.

NFPA 111, *Standard on Stored Electrical Energy Emergency and Standby Power Systems,* 2005 edition.

NFPA 120, *Standard for Fire Prevention and Control in Coal Mines,* 2004 edition.

NFPA 140, *Standard on Motion Picture and Television Production Studio Soundstages and Approved Production Facilities,* 2004 edition.

NFPA 160, *Standard for the Use of Flame Effects Before an Audience,* 2006 edition.

NFPA 204, *Standard for Smoke and Heat Venting,* 2002 edition.

NFPA 211, *Standard for Chimneys, Fireplaces, Vents, and Solid Fuel-Burning Appliances,* 2003 edition.

NFPA 220, *Standard on Types of Building Construction,* 2006 edition.

NFPA 221, *Standard for High Challenge Fire Walls, Fire Walls, and Fire Barrier Walls,* 2006 edition.

NFPA 232, *Standard for the Protection of Records,* 2000 edition.

NFPA 241, *Standard for Safeguarding Construction, Alteration, and Demolition Operations,* 2004 edition.

NFPA 251, *Standard Methods of Tests of Fire Resistance of Building Construction and Materials,* 2006 edition.

NFPA 252, *Standard Methods of Fire Tests of Door Assemblies,* 2003 edition.

NFPA 253, *Standard Method of Test for Critical Radiant Flux of Floor Covering Systems Using a Radiant Heat Energy Source,* 2006 edition.

NFPA 255, *Standard Method of Test of Surface Burning Characteristics of Building Materials,* 2006 edition.

NFPA 256, *Standard Methods of Fire Tests of Roof Coverings,* 2003 edition.

NFPA 257, *Standard on Fire Test for Window and Glass Block Assemblies,* 2000 edition.

NFPA 271, *Standard for Heat and Visible Smoke Release Rates for Materials and Products Using an Oxygen Consumption Calorimeter,* 2004 edition.

NFPA 288, *Standard Methods of Fire Tests of Floor Fire Door Assemblies Installed Horizontally in Fire Resistance–Rated Floor Systems,* 2001 edition.

NFPA 302, *Fire Protection Standard for Pleasure and Commercial Motor Craft,* 2004 edition.

NFPA 303, *Fire Protection Standard for Marinas and Boatyards,* 2006 edition.

NFPA 307, *Standard for the Construction and Fire Protection of Marine Terminals, Piers, and Wharves,* 2006 edition.

NFPA 312, *Standard for Fire Protection of Vessels During Construction, Conversion, Repair, and Lay-Up,* 2006 edition.

NFPA 318, *Standard for the Protection of Semiconductor Fabrication Facilities,* 2006 edition.

NFPA 385, *Standard for Tank Vehicles for Flammable and Combustible Liquids,* 2000 edition.

NFPA 407, *Standard for Aircraft Fuel Servicing,* 2001 edition.

NFPA 409, *Standard on Aircraft Hangars,* 2004 edition.

NFPA 410, *Standard on Aircraft Maintenance,* 2004 edition.

NFPA 415, *Standard on Airport Terminal Buildings, Fueling Ramp Drainage, and Loading Walkways,* 2002 edition.

NFPA 418, *Standard for Heliports,* 2001 edition.

NFPA 430, *Code for the Storage of Liquid and Solid Oxidizers,* 2004 edition.

NFPA 432, *Code for the Storage of Organic Peroxide Formulations,* 2002 edition.

NFPA 434, *Code for the Storage of Pesticides,* 2002 edition.

NFPA 484, *Standard for Combustible Metals,* 2006 edition.

NFPA 490, *Code for the Storage of Ammonium Nitrate,* 2002 edition.

NFPA 495, *Explosive Materials Code,* 2006 edition.

NFPA 498, *Standard for Safe Havens and Interchange Lots for Vehicles Transporting Explosives,* 2006 edition.

NFPA 501, *Standard on Manufactured Housing,* 2005 edition.

NFPA 501A, *Standard for Fire Safety Criteria for Manufactured Home Installations, Sites, and Communities,* 2005 edition.

NFPA 505, *Fire Safety Standard for Powered Industrial Trucks Including Type Designations, Areas of Use, Conversions, Maintenance, and Operations,* 2006 edition.

NFPA 560, *Standard for the Storage, Handling, and Use of Ethylene Oxide for Sterilization and Fumigation,* 2002 edition.

NFPA 601, *Standard for Security Services in Fire Loss Prevention,* 2005 edition.

NFPA 654, *Standard for the Prevention of Fire and Dust Explosions from the Manufacturing, Processing, and Handling of Combustible Particulate Solids,* 2006 edition.

NFPA 655, *Standard for Prevention of Sulfur Fires and Explosions,* 2001 edition.

NFPA 664, *Standard for the Prevention of Fires and Explosions in Wood Processing and Woodworking Facilities,* 2002 edition.

NFPA 701, *Standard Methods of Fire Tests for Flame Propagation of Textiles and Films,* 2004 edition.

NFPA 703, *Standard for Fire Retardant–Treated Wood and Fire-Retardant Coatings for Building Materials,* 2006 edition.

NFPA 704, *Standard System for the Identification of the Hazards of Materials for Emergency Response,* 2001 edition.

NFPA 750, *Standard on Water Mist Fire Protection Systems,* 2003 edition.

NFPA 801, *Standard for Fire Protection for Facilities Handling Radioactive Materials,* 2003 edition.

NFPA 909, *Code for the Protection of Cultural Resource Properties — Museums, Libraries, and Places of Worship,* 2005 edition.

NFPA 1122, *Code for Model Rocketry,* 2002 edition.

NFPA 1123, *Code for Fireworks Display,* 2006 edition.

NFPA 1124, *Code for the Manufacture, Transportation, Storage, and Retail Sales of Fireworks and Pyrotechnic Articles,* 2006 edition.

NFPA 1125, *Code for the Manufacture of Model Rocket and High Power Rocket Motors,* 2001 edition.

NFPA 1126, *Standard for the Use of Pyrotechnics Before a Proximate Audience,* 2006 edition.

NFPA 1127, *Code for High Power Rocketry,* 2002 edition.

NFPA 1141, *Standard for Fire Protection in Planned Building Groups,* 2003 edition.

NFPA 1142, *Standard on Water Supplies for Suburban and Rural Fire Fighting,* 2001 edition.

NFPA 1144, *Standard for Protection of Life and Property from Wildfire,* 2002 edition.

NFPA 1192, *Standard on Recreational Vehicles,* 2005 edition.

NFPA 1194, *Standard for Recreational Vehicle Parks and Campgrounds,* 2005 edition.

NFPA 1600, *Standard on Disaster/Emergency Management and Business Continuity Programs,* 2004 edition.

NFPA 1963, *Standard for Fire Hose Connections,* 2003 edition.

NFPA 2001, *Standard on Clean Agent Fire Extinguishing Systems,* 2004 edition.

NFPA 5000®, Building Construction and Safety Code®, 2006 edition.

2.3 Other Publications.

2.3.1 ANSI Publication. American National Standards Institute, Inc., 25 West 43rd Street, 14th floor, New York, NY 10036.

CABO/ANSI A117.1, *American National Standard for Accessible and Usable Buildings and Facilities,* 2003.

2.3.2 API Publications. American Petroleum Institute, 1220 L Street, NW, Washington, DC 20005-4070.

API-ASME Code for Unfired Pressure Vessels for Petroleum Liquids and Gases, Pre-July 1, 1961.

API BULL 1529, *Aviation Fueling Hose,* 1998.

API 607, *Fire Test for Soft-Seated Quarter-Turn Valves,* 1993.

2.3.3 ASHRAE Publication. American Society of Heating, Refrigerating and Air Conditioning Engineers, Inc., 1791 Tullie Circle, N.E., Atlanta, GA 30329.

ASHRAE 15, *Safety Code for Mechanical Refrigeration,* 1994.

2.3.4 ASME Publications. American Society of Mechanical Engineers, Three Park Avenue, New York, NY 10016-5990.

ASME A13.1, *Scheme for the Identification of Piping Systems,* 1996.

ASME/ANSI A17.1, *Safety Code for Elevators and Escalators,* 2000.

ASME/ANSI A17.3, *Safety Code for Existing Elevators and Escalators,* 2002.

ASME B31, *Code for Pressure Piping,* 1998.

ASME B31.3, *Process Piping,* 2004.

ASME B56.1, *Safety Standard for Low-Lift and High-Lift Trucks,* 2004.

ASME *Boiler and Pressure Vessel Code,* Section VIII, "Rules for the Construction of Unfired Pressure Vessels," 2004.

ASME *Code Case Interpretations and Addenda,* 2004.

2.3.5 ASTM Publications. American Society for Testing and Materials, 100 Barr Harbor Drive, West Conshohocken, PA 19428-2959.

ASTM D 5, *Standard Method of Test for Penetration of Bituminous Materials,* 2005.

ASTM D 86, *Standard Method of Test for Distillation of Petroleum Products at Atmospheric Pressure,* 2004.

ASTM D 92, *Standard Test Method for Flash and Fire Points by Cleveland Open Cup Tester,* 2002.

ASTM D 323, *Standard Method of Test for Vapor Pressure of Petroleum Products (Reid Method),* 1999.

ASTM D 2898, *Test Method for Accelerated Weathering of Fire-Retardant-Treated Wood for Fire Testing,* 2004.

ASTM D 4206, *Standard Test Method for Sustained Burning of Liquid Mixtures Using the Small Scale Open-Cup Apparatus,* 2001.

ASTM D 4207, *Standard Test Method for Sustained Burning of Low Viscosity Liquid Mixtures by the Wick Test.*

ASTM D 5391, *Standard Test for Electrical Conductivity and Resistivity of a Flowing High Purity Water Sample,* 2005.

ASTM E 84, *Standard Test Method of Surface Burning Characteristics of Building Materials,* 2001.

ASTM E 108, *Standard Test Methods for Fire Tests of Roof Coverings,* 2000.

ASTM E 119, *Standard Test Methods for Fire Tests of Building Construction and Materials,* 2000.

ASTM E 136, *Standard Test Method for Behavior of Materials in a Vertical Tube Furnace at 750 Degrees C,* 2004.

ASTM E 502, *Standard Test Method for Selection and Use of ASTM Standards for the Determination of Flash Point of Chemicals by Closed Cup Methods,* 2000.

ASTM E 681, *Standard Test Method for Concentration Limits of Flammability of Chemicals (Vapors and Gases),* 2001.

ASTM E 814, *Standard Test Method for Fire Tests of Through Penetration Fire Stops,* 2002.

ASTM E 1226, *Test Method for Pressure and Rate of Pressure Rise for Combustible Dusts,* 2000.

ASTM E 1354, *Standard Test Method for Heat and Visible Smoke Release Rates for Materials and Products Using an Oxygen Consumption Calorimeter,* 2002.

ASTM E 1590, *Standard Test Method for Fire Testing of Mattresses,* 2002.

ASTM E 1591, *Standard Guide for Obtaining Data for Deterministic Fire Models,* 2000.

ASTM E 1996, *Standard Specification for Performance of Exterior Windows, Curtain Walls, Doors and Impact Protective Systems Impacted by Windborne Debris in Hurricanes,* 2003.

ASTM E 2010, *Standard Test Method for Positive Pressure Fire Tests of Window Assemblies,* 2001.

ASTM E 2074, *Standard Test Method for Fire Tests of Door Assemblies, Including Positive Pressure Testing of Side-Hinged and Pivoted Swinging Door Assemblies,* 2000.

ASTM F 852, *Standard for Portable Gasoline Containers for Consumer Use,* 1999.

ASTM F 976, *Standard for Portable Kerosene Containers for Consumer Use,* 2002.

2.3.6 ATA Publication. American Trucking Association Traffic Department, 2200 Mill Road, Alexandria, VA 22314.

National Motor Freight Classification, 2002.

2.3.7 CGA Publications. Compressed Gas Association, 4221 Walney Road, 5th Floor, Chantilly, VA 20151-2923.

CGA C-7, *Guide to the Preparation of Precautionary Labeling and Marking of Compressed Gas Containers,* 2004.

CGA P-1, *Safe Handling of Compressed Gases in Containers,* 2000.

CGA P-18, *Standard for Bulk Inert Gas Systems at Consumer Sites,* 1992.

CGA P-20, *Standard for the Classification of Toxic Gas Mixtures,* 1995.

CGA P-23, *Standard for Categorizing Gas Mixtures Containing Flammable and Nonflammable Component,* 1995.

CGA P-32, *Safe Storage and Handling of Silane and Silane Mixtures,* 2000.

CGA S-1.1, *Pressure Relief Device Standards — Part 1— Cylinders for Compressed Gases,* 2003.

CGA S-1.2, *Pressure Relief Device Standards — Part 2 — Cargo and Portable Tanks for Compressed Gases,* 1995.

CGA S-1.3, *Pressure Relief Device Standards — Part 3 – Stationary Storage Containers for Compressed Gases,* 2003.

2.3.8 CSA Publication. Canadian Standards Association, 178 Rexdale Boulevard, Rexdale, Ontario, M9W 1R3.

CAN 3-B44, *Safety Code for Elevators, Including Supplement No. 1,* 1987.

2.3.9 FMRC Publication. Factory Mutual Research Corporation, 1151 Boston-Providence Turnpike, Norwood, MA 02062.

FMRC Class 6083, *Examination Program for Fusible Closures for Steel Drums.*

2.3.10 IAS Publications. International Approval Services, 8501 East Pleasant Valley Road, Cleveland, OH 44131.

ANSI/IAS NGV1, *Standard for Compressed Natural Gas Vehicle (NGV) Fueling Connection Devices,* 1998.

ANSI/IAS NGV2, *Basic Requirements for Compressed Natural Gas Vehicle (NGV) Fuel Containers,* 2000.

2.3.11 ISO Publications. International Organization for Standardization, 1, rue de Varembé, Case postale 56, CH-1211 Geneve 20, Switzerland.

ISO 8115, *Cotton Bales Dimensions and Density,* 2001.

ISO 10298, *Determination of toxicity of a gas or gas mixture,* 1995.

ISO 10156, *Gases and gas mixtures — Determination of fire potential and oxidizing ability for the selection of cylinder valve outlets,* 1996.

2.3.12 NBBPVI Publication. National Board of Boiler and Pressure Vessel Inspectors, 1055 Crupper Avenue, Columbus, OH 43229.

National Board Inspection Code, 2001.

2.3.13 NRFC Publication. National Railroad Freight Committee, 222 South Riverside Plaza, Chicago, IL 60606-5945.

Uniform Freight Classification, 2005.

2.3.14 RVIA Publication. Recreation Vehicle Industry Association, 1896 Preston White Drive, P.O. Box 2999, Reston, VA 20195-0999.

RVIA/ANSI A119.5, *Standard for Recreational Park Trailers,* 1998.

2.3.15 Scott Specialty Gases Publication. Scott Specialty Gases, 6141 Easton Road, Box 310, Plumsteadville, PA 18949.

Design & Safety Handbook, 2004.

2.3.16 UL Publications. Underwriters Laboratories Inc., 333 Pfingsten Road, Northbrook, IL 60062-2096.

UL 8, *Standard for Foam Fire Extinguishers,* 1995.

UL 9, *Standard for Safety Fire Tests of Window Assemblies,* 1994.

UL 10B, *Standard for Fire Tests of Door Assemblies,* 1997.

UL 10C, *Standard for Positive Pressure Fire Tests of Door Assemblies,* 1998.

UL 147A, *Standard for Nonrefillable (Disposable) Type Fuel Gas Cylinder Assemblies,* 1996.

UL 147B, *Standard for Nonrefillable (Disposable) Type Metal Container Assemblies for Butane,* 2005.

UL 154, *Standard for Carbon Dioxide Fire Extinguishers,* 1995.

UL 197, *Standard for Commercial Electric Cooking Appliances,* 2003.

UL 263, *Standard for Fire Tests of Building Construction and Materials,* 1997.

UL 299, *Standard for Dry Chemical Fire Extinguishers,* 2002.

UL 300, *Standard for Fire Testing of Fire Extinguishing Systems for Protection of Restaurant Cooking Areas,* 1996.

UL 340, *Test for Comparative Flammability of Liquids,* 1997.

UL 555, *Standard for Fire Dampers,* 1999.

UL 555S, *Standard for Smoke Dampers,* 1999.

UL 567, *Standard for Emergency Breakaway Fittings, Swivel Connectors and Pipe Connection Fittings for Petroleum Products and LP-Gas,* 2003.

UL 626, *Standard for 2½-Gallon Stored-Pressure, Water-Type Fire Extinguishers,* 1995.

UL 711, *Standard Rating and Testing of Fire Extinguishers,* 1995.

UL 723, *Standard for Test for Surface Burning Characteristics of Building Materials,* 2001.

UL 790, *Standard for Safety for Tests for Fire Resistance of Roof Covering Materials,* 1997.

UL 842, *Standard for Valves for Flammable Fluids,* 1997.

UL 900, *Standard for Test Performance of Air Filter Units,* 1994.

UL 913, *Standard for Intrinsically Safe Apparatus and Associated Apparatus for Use in Class I, II, and III Division 1, Hazardous (Classified) Locations,* 2002.

UL 924, *Standard for Emergency Lighting and Power Equipment,* 1995.

UL 1093, *Standard for Halogenated Agent Fire Extinguishers,* 1995.

UL 1313, *Nonmetallic Safety Cans for Petroleum Products,* 1993.

UL 1479, *Standard for Fire Tests of Through-Penetration Firestops,* 2003.

UL 1803, *Standard for Factory Follow-up on Third Party Certified Portable Fire Extinguishers,* 1994.

UL 1975, *Standard for Fire Tests for Foamed Plastics Used for Decorative Purposes,* 1996.

UL 2079, *Standard for Tests for Fire Resistance of Building Joint Systems,* 1998.

UL 2080, *Standard for Fire Resistant Tanks for Flammable and Combustible Liquids,* 2000.

UL 2085, *Standard for Insulated Aboveground Tanks for Flammable and Combustible Liquids,* 1997.

UL 2129, *Standard for Halocarbon Clean Agent Fire Extinguishers,* 1999.

UL 2200, *Standard for Safety for Stationary Engine Generator Assemblies,* 1998.

UL 2208, *Standard for Solvent Distillation Units,* 1996.

UL 2245, *Standard for Below-Grade Vaults for Flammable Liquid Storage Tanks,* 1999.

UL 2368, *Standard for Fire Exposure Testing of Intermediate Bulk Containers for Flammable and Combustible Liquids,* 2001.

2.3.17 ULC Publications. Underwriters' Laboratories of Canada, 7 Underwriters Road, Toronto, Ontario M1R 3B4, Canada.

ULC-S503, *Standard for Carbon-Dioxide Fire Extinguishers,* 2005.

ULC-S504, *Standard for Dry Chemical Fire Extinguishers,* 2002.

ULC-S507, *Standard for Water Fire Extinguishers,* 2005.

ULC-S508, *Standard for Rating and Testing of Fire Extinguishers and Fire Extinguishing Agents,* 2002.

ULC-S512, *Standard for Halogenated Agent Hand and Wheeled Fire Extinguishers,* 1987.

2.3.18 UN Publication. United Nations Headquarters, New York, NY 10017.

United Nations, *Recommendations on the Transport of Dangerous Goods,* Chapter 6, Rev. 4, 2004.

2.3.19 U.S. Government Publications. U.S. Government Printing Office, Washington, DC 20402.

FAA A/C 150/5390-2A, *Heliport Design Advisory Circular,* January 20, 1994.

ICC, *Rules for Construction of Unfired Pressure Vessels,* prior to April 1, 1967.

ICC, *Rules for Construction of Unfired Pressure Vessels,* April 1, 1967.

Title 16, Code of Federal Regulations, Parts 1500 and 1507, U.S. Consumer Product Safety Commission.

Title 16, Code of Federal Regulations, Part 1632, Standard for the Flammability of Mattresses and Mattress Pads, January 1, 1990.

Title 18, Code of Federal Regulations, "Importation, Manufacture, Distribution and Storage of Explosive Materials."

Title 29, Code of Federal Regulations, Parts 1910.1000 and 1910.1200.

Title 40, Code of Federal Regulations, Parts 152.175 and 156.10(i)(A).

Title 49, Code of Federal Regulations, Transportation.

2.3.20 Other Publication. *Merriam-Webster's Collegiate Dictionary,* 11th edition, Merriam-Webster, Inc., Springfield, MA, 2003.

2.4 References for Extracts in Mandatory Sections.

NFPA 10, *Standard for Portable Fire Extinguishers,* 2002 edition.

NFPA 13, *Standard for the Installation of Sprinkler Systems,* 2002 edition.

NFPA 14, *Standard for the Installation of Standpipe and Hose Systems,* 2003 edition.

NFPA 20, *Standard for the Installation of Stationary Pumps for Fire Protection,* 2003 edition.

NFPA 25, *Standard for the Inspection, Testing, and Maintenance of Water-Based Fire Protection Systems,* 2002 edition.

NFPA 30, *Flammable and Combustible Liquids Code,* 2003 edition.

NFPA 30A, *Code for Motor Fuel Dispensing Facilities and Repair Garages,* 2003 edition.

NFPA 30B, *Code for the Manufacture and Storage of Aerosol Products,* 2002 edition.

NFPA 31, *Standard for the Installation of Oil-Burning Equipment,* 2001 edition.

NFPA 33, *Standard for Spray Application Using Flammable or Combustible Materials,* 2003 edition.

NFPA 34, *Standard for Dipping and Coating Processes Using Flammable or Combustible Liquids,* 2003 edition.

NFPA 45, *Standard on Fire Protection for Laboratories Using Chemicals,* 2004 edition.

NFPA 51B, *Standard for Fire Prevention During Welding, Cutting, and Other Hot Work,* 2003 edition.

NFPA 52, *Vehicular Fuel Systems Code,* 2006 edition.

NFPA 55, *Standard for the Storage, Use, and Handling of Compressed Gases and Cryogenic Fluids in Portable and Stationary Containers, Cylinders, and Tanks,* 2005 edition.

NFPA 58, *Liquefied Petroleum Gas Code,* 2004 edition.

NFPA 61, *Standard for the Prevention of Fires and Dust Explosions in Agricultural and Food Processing Facilities,* 2002 edition.

NFPA 68, *Guide for Venting of Deflagrations,* 2002 edition.

NFPA 69, *Standard on Explosion Prevention Systems,* 2002 edition (for definitions only).

NFPA 70, *National Electrical Code®,* 2005 edition.

NFPA 72®, National Fire Alarm Code®, 2002 edition.

NFPA 80, *Standard for Fire Doors and Fire Windows,* 1999 edition.

NFPA 88A, *Standard for Parking Structures,* 2002 edition (for definitions only).

NFPA 90A, *Standard for the Installation of Air-Conditioning and Ventilating Systems,* 2002 edition.

NFPA *101®, Life Safety Code®,* 2006 edition.

NFPA 101B, *Code for Means of Egress for Buildings and Structures,* 2002 edition.

NFPA 102, *Standard for Grandstands, Folding and Telescopic Seating, Tents, and Membrane Structures,* 1995 edition.

NFPA 140, *Standard on Motion Picture and Television Production Studio Soundstages and Approved Production Facilities,* 2004 edition.

NFPA 211, *Standard for Chimneys, Fireplaces, Vents, and Solid Fuel-Burning Appliances,* 2003 edition.

NFPA 220, *Standard on Types of Building Construction,* 2006 edition.

NFPA 271, *Standard for Heat and Visible Smoke Release Rates for Materials and Products Using an Oxygen Consumption Calorimeter,* 2004 edition, (Chapter 19).

NFPA 303, *Fire Protection Standard for Marinas and Boatyards,* 2006 edition.

NFPA 307, *Standard for the Construction and Fire Protection of Marine Terminals, Piers, and Wharves,* 2006 edition.

NFPA 312, *Standard for Fire Protection of Vessels During Construction, Conversion, Repair, and Lay-Up,* 2006 edition.

NFPA 318, *Standard for the Protection of Semiconductor Fabrication Facilities,* 2006 edition.

NFPA 402, *Guide for Aircraft Rescue and Fire Fighting Operations,* 2002 edition.

NFPA 407, *Standard for Aircraft Fuel Servicing,* 2001 edition.

NFPA 415, *Standard on Airport Terminal Buildings, Fueling Ramp Drainage, and Loading Walkways,* 2002 edition.

NFPA 418, *Standard for Heliports,* 2001 edition.

NFPA 430, *Code for the Storage of Liquid and Solid Oxidizers,* 2004 edition.

NFPA 432, *Code for the Storage of Organic Peroxide Formulations,* 2002 edition.

NFPA 434, *Code for the Storage of Pesticides,* 2002 edition.

NFPA 472, *Standard for Professional Competence of Responders to Hazardous Materials Incidents,* 2002 edition.

NFPA 654, *Standard for the Prevention of Fire and Dust Explosions from the Manufacturing, Processing, and Handling of Combustible Particulate Solids,* 2006 edition.

NFPA 914, *Code for Fire Protection of Historic Structures,* 2001 edition.

NFPA 1031, *Standard for Professional Qualifications for Fire Inspector and Plan Examiner,* 2003 edition.

NFPA 1124, *Code for the Manufacture, Transportation, Storage, and Retail Sales of Fireworks and Pyrotechnic Articles,* 2006 edition.

NFPA 1141, *Standard for Fire Protection in Planned Building Groups,* 2003 edition.

NFPA 1144, *Standard for Protection of Life and Property from Wildfire,* 2002 edition.

NFPA 5000®, Building Construction and Safety Code®, 2006 edition.

ASCE 7, *Minimum Design Loads for Buildings and Other Structures,* 2002.

Chapter 3 Definitions

3.1 General. The definitions contained in this chapter shall apply to the terms used in this *Code.* Where terms are not defined in this chapter or within another chapter, they shall be defined using their ordinarily accepted meanings within the context in which they are used. *Merriam-Webster's Collegiate Dictionary,* 11th edition, shall be the source for the ordinarily accepted meaning.

3.2 NFPA Official Definitions.

3.2.1* Approved. Acceptable to the authority having jurisdiction.

3.2.2* Authority Having Jurisdiction (AHJ). An organization, office, or individual responsible for enforcing the requirements of a code or standard, or for approving equipment, materials, an installation, or a procedure.

3.2.3* Code. A standard that is an extensive compilation of provisions covering broad subject matter or that is suitable for adoption into law independently of other codes and standards.

3.2.4 Guide. A document that is advisory or informative in nature and that contains only nonmandatory provisions. A guide may contain mandatory statements such as when a guide can be used, but the document as a whole is not suitable for adoption into law.

3.2.5 Labeled. Equipment or materials to which has been attached a label, symbol, or other identifying mark of an organization that is acceptable to the authority having jurisdiction and concerned with product evaluation, that maintains periodic inspection of production of labeled equipment or materials, and by whose labeling the manufacturer indicates compliance with appropriate standards or performance in a specified manner.

3.2.6* Listed. Equipment, materials, or services included in a list published by an organization that is acceptable to the authority having jurisdiction and concerned with evaluation of products or services, that maintains periodic inspection of production of listed equipment or materials or periodic evaluation of services, and whose listing states that either the equipment, material, or service meets appropriate designated standards or has been tested and found suitable for a specified purpose.

3.2.7 Recommended Practice. A document that is similar in content and structure to a code or standard but that contains only nonmandatory provisions using the word "should" to indicate recommendations in the body of the text.

3.2.8 Shall. Indicates a mandatory requirement.

3.2.9 Should. Indicates a recommendation or that which is advised but not required.

3.2.10 Standard. A document, the main text of which contains only mandatory provisions using the word "shall" to indicate requirements and which is in a form generally suitable for mandatory reference by another standard or code or for adoption into law. Nonmandatory provisions shall be located in an appendix or annex, footnote, or fine-print note and are not to be considered a part of the requirements of a standard.

3.3 General Definitions.

3.3.1* Absolute Pressure. Pressure based on a zero reference point, the perfect vacuum. [**55,** 2005]

3.3.2 Access Box. An approved secure box, accessible by the authority having jurisdiction's master key or control, containing entrance keys or other devices to gain access to a structure or area.

3.3.3 Addition. An increase in the building area, aggregate floor area, height or number of stories of a structure. [**ASCE 7:**9.2.1]

3.3.4* Aerosol. A product that is dispensed from an aerosol container by a propellant. [**30B,** 2002]

3.3.5 Airport (Aerodrome). An area on land or water that is used or intended to be used for the landing and takeoff of aircraft and includes buildings and facilities. [**402,** 2002]

3.3.6 Airport Ramp. Any outdoor area, including aprons and hardstands, where aircraft can be positioned, stored, serviced, or maintained, irrespective of the nature of the surface of the area. [**415,** 2002]

3.3.7* Aisle Width (Storage Rack). The horizontal dimension between the face of the loads in racks under consideration. [**13,** 2002]

3.3.8 Alarm. A warning of danger.

3.3.9 Alarm Signal. See 3.3.208.1.

3.3.10 Alleyway. An accessible clear space between storage piles or groups of piles suitable for housekeeping operations, visual inspection of piling areas, and initial fire-fighting operations.

3.3.11 Alternative. A system, condition, arrangement, material, or equipment submitted for approval to the authority having jurisdiction and the fire chief as a substitute for a code requirement. [**1141,** 2003]

3.3.12 ANSI/ASME. The designation for American National Standards Institute publication sponsored and published by the American Society of Mechanical Engineers.

3.3.13 Area.

3.3.13.1 ***Back Stock Area.*** The area of a mercantile occupancy that is physically separated from the sales area and not intended to be accessible to the public. [**30B,** 2002]

3.3.13.2 ***Consumer Fireworks Retail Sales (CFRS) Area.*** The portion of a consumer fireworks retail sales facility or store,

including the immediately adjacent aisles, where consumer fireworks are located for the purpose of retail display and sale to the public. [**1124,** 2006]

3.3.13.3 ***Control Area.*** A designated area, either indoors or outdoors, within which hazardous materials are allowed to be stored, used, handled, or dispensed in quantities not exceeding the maximum allowable quantity (MAQ).

3.3.13.4 ***Fire Area.*** An area of a building separated from the remainder of the building by construction having a fire resistance of at least 1 hour and having all communicating openings properly protected by an assembly having a fire resistance rating of at least 1 hour. [**30,** 2003]

3.3.13.5 ***Indoor Area.*** An area that is within a building or structure having overhead cover, other than a structure qualifying as "weather protection" in accordance with 6.5.2 of NFPA 55, *Standard for the Storage, Use, and Handling of Compressed Gases and Cryogenic Fluids in Portable and Stationary Containers, Cylinders, and Tanks. (See also 3.3.13.8, Outdoor Area.)* [**55,** 2005]

3.3.13.6 ***Inside Liquid Storage Area.*** A room or building used for the storage of liquids in containers or portable tanks, separated from other types of occupancies. [**30,** 2003]

3.3.13.7 ***Organic Peroxide Storage Area.*** An area used for the storage of organic peroxide formulations. [**432,** 2002]

3.3.13.8 ***Outdoor Area.*** An area that is either outside the confines of a building, or an area sheltered from the elements by overhead cover, that is protected from weather exposure by an exterior wall that obstructs not more than 25 percent of the building boundary.

3.3.13.9 ***Sales Display Area.*** The area of a mercantile occupancy that is open to the public for the purpose of viewing and purchasing goods, wares, and merchandise. Individuals are free to circulate among the items, which are typically displayed on shelves, racks, or on the floor. [**30B,** 2002]

3.3.13.10 ***Smoking Area.*** A designated area where smoking is permitted within a premises in which smoking is otherwise generally prohibited.

3.3.13.11* ***Spray Area.*** Any area in which dangerous quantities of flammable or combustible vapors, mists, residues, dusts, or deposits are present due to the operation of spray processes. It can be either enclosed or unenclosed and includes: (a) any area in the direct path of a spray application process; (b) the interior of any exhaust plenum and any exhaust duct leading from the spray process; (c) the interior of any limited finishing workstation, spray booth, or spray room as herein defined; (d) the interior of any air recirculation particulate filter, solvent concentrator unit, solvent distillation (recovery) unit, or recirculation air supply unit. [**33,** 2003]

3.3.14 ASME. American Society of Mechanical Engineers. [**58,** 2004]

3.3.15 ASME Container (or Tank). See 3.3.65.1.

3.3.16* Available Height for Storage. The maximum height at which commodities can be stored above the floor and still maintain adequate clearance from structural members and the required clearance below sprinklers. [**13,** 2002]

3.3.17* Baled Cotton. A natural seed fiber wrapped and secured in industry-accepted materials, usually consisting of burlap, woven polypropylene, or sheet polyethylene, and secured with steel, synthetic, or wire bands, or wire; also includes linters (lint removed from the cottonseed) and motes (residual materials from the ginning process).

3.3.17.1 ***Block.*** A basic yard storage unit for baled cotton comprising multiple-row storage with clear spaces on all sides.

3.3.17.2* ***Densely Packed Baled Cotton.*** Cotton, made into banded bales, with a packing density of at least 22 lb/ft^3 (360 kg/m^2), and dimensions complying with the following: a length of 55 in. (ca. 1400 mm ± 20 mm), a width of 21 in. (ca. 530 mm ± 20 mm) and a height of 27.6 in. to 35.4 in. (700 mm to 900 mm).

3.3.17.3 ***Fire-Packed Baled Cotton.*** A cotton bale within which a fire has been packed as a result of a process in which ginning is the most frequent cause.

3.3.17.4 ***Naked Cotton Bale.*** An unwrapped cotton bale secured with wire or steel straps.

3.3.18 Barrel (bbl). A unit of volume used in the petroleum industry that is equal to 42 U.S. gal (159 L or 0.159 m^3). [**30,** 2003]

3.3.19 Barricade (Explosives or Fireworks). A natural or artificial barrier that effectively screens a magazine, building, railway, or highway from the effects of an explosion in a magazine or building containing explosives. [**1124,** 2006]

3.3.19.1 ***Artificial Barricade (Explosives or Fireworks).*** An artificial mound or revetted wall of earth of a minimum thickness of 3 ft (0.9 m). [**1124,** 2006]

3.3.19.2 ***Natural Barricade (Explosives or Fireworks).*** A natural outdoor feature(s), such as hills or trees, with a density sufficient to prevent surrounding exposures that require protection from being seen from a magazine or building containing explosives when the trees are bare of leaves. [**1124,** 2006]

3.3.20 Basement. Story of a building wholly below grade or partly below and partly above grade, located so that the vertical distance from grade to the floor below is greater than the vertical distance from grade to the floor above. [***5000,*** 2006]

3.3.21 Battery (Lead-Acid).

3.3.21.1* ***Valve-Regulated (VRLA).*** A lead-acid battery consisting of sealed cells furnished with a valve that opens to vent the battery whenever the internal pressure of the battery exceeds the ambient pressure by a set amount.

3.3.21.2* ***Vented (Flooded).*** A lead-acid battery consisting of cells that have electrodes immersed in liquid electrolyte.

3.3.22 Battery System (Lead-Acid). A system that consists of these interconnected subsystems: (1) lead-acid batteries; (2) battery chargers; and (3) a collection of rectifiers, inverters, converters, and associated electrical equipment as required for a particular application.

3.3.23 Block. See 3.3.17.1.

3.3.24 Board of Appeals. A group of persons appointed by the governing body of the jurisdiction adopting this *Code* for the purpose of hearing and adjudicating differences of opinion between the authority having jurisdiction and the citizenry in the interpretation, application, and enforcement of this *Code.*

3.3.25* Boiling Point. The temperature at which the vapor pressure of a liquid equals the surrounding atmospheric pressure. For purposes of defining the boiling point, atmospheric pressure shall be considered to be 14.7 psia (760 mm Hg). For mixtures that do not have a constant boiling point, the 20 percent evaporated point of a distillation performed in accordance with ASTM D 86, *Standard Method of Test for Distillation of Petroleum Products,* shall be considered to be the boiling point. [**30,** 2003]

3.3.26* Boil-Over. An event in the burning of certain oils in an open-top tank when, after a long period of quiescent burning, there is a sudden increase in fire intensity associated with expulsion of burning oil from the tank. [**30,** 2003]

3.3.27* Building. Any structure used or intended for supporting or sheltering any use or occupancy. [***101,*** 2006]

3.3.27.1* ***Airport Terminal Building.*** A structure used primarily for air passenger enplaning or deplaning, including ticket sales, flight information, baggage handling, and other necessary functions in connection with air transport operations. This term includes any extensions and satellite buildings used for passenger handling or aircraft flight service functions. Aircraft loading walkways and "mobile lounges" are excluded. [**415,** 2002]

3.3.27.2 ***Apartment Building.*** See 3.3.165.2.

3.3.27.3 ***Attached Building.*** A building having only one common wall with another building having other types of occupancies. [**30,** 2003]

3.3.27.4 ***Bulk Merchandising Retail Building.*** See 3.3.165.4.

3.3.27.5* ***Existing Building.*** A building erected or officially authorized prior to the effective date of the adoption of this edition of the *Code* by the agency or jurisdiction. [***101,*** 2006]

3.3.27.6* ***High-Rise Building.*** A building where the floor of an occupiable story is greater than 75 ft (23 m) above the lowest level of fire department vehicle access. [***5000,*** 2006]

3.3.27.7* ***Important Building.*** A building that is considered not expendable in an exposure fire. [**30,** 2003]

3.3.27.8 ***Mini-Storage Building.*** See 3.3.165.25.1.

3.3.27.9 ***Private Building.*** A building or the portion of a building that normally is not frequented by or open to the public.

3.3.27.10 ***Satellite.*** A structure that can be adjacent to but separated from the airport terminal building, accessible aboveground or through subway passages, and used to provide flight service operations, such as passenger check-in, waiting rooms, food service, enplaning or deplaning, etc. [**415,** 2002]

3.3.27.11 ***Storage Tank Building.*** A three-dimensional space that is enclosed by a roof and a wall that covers more than one-half of the possible area of the sides of the space, is of sufficient size to allow entry by personnel, will likely limit the dissipation of heat or dispersion of vapors, and restricts access for fire fighting. [**30,** 2003]

3.3.28 Bulk Oxygen System. See 3.3.233.2.

3.3.29 Bulk Plant or Terminal. That portion of a property where liquids are received by tank vessel, pipelines, tank car, or tank vehicle and are stored or blended in bulk for the purpose of distributing such liquids by tank vessel, pipeline, tank car, tank vehicle, portable tank, or container. [**30,** 2003]

3.3.30 Burn-It. A fire-fighting strategy that allows for the free-burn of a tire fire.

3.3.31 Bury-It. A fire-fighting strategy in which a tire pile is buried with soil, sand, gravel, cement dust, or other cover material.

3.3.32 Certificate of Fitness. A written document issued by the authority having jurisdiction to any person for the purpose of granting permission to such person to conduct or engage in any operation or act for which certification is required.

3.3.33 CFR. The Code of Federal Regulations of the United States Government.

3.3.34 CGA. Compressed Gas Association.

3.3.35 Chemical Heat of Combustion (Hc). The amount of heat released, in Btu/lb (kJ/g), when a substance is oxidized to yield stable end products, including water as a vapor, as measured under actual fire conditions in a normal ambient (air) atmosphere. [**30B,** 2002]

3.3.36 Chemical Name. The scientific designation of a chemical in accordance with the nomenclature system developed by the International Union of Pure and Applied Chemistry or the Chemical Abstracts Service rules of nomenclature, or a name that clearly identifies a chemical for the purpose of conducting an evaluation.

3.3.37 Chemical Plant. A large integrated plant or that portion of such a plant, other than a refinery or distillery, where liquids are produced by chemical reactions or used in chemical reactions. [**30,** 2003]

3.3.38* Chip. A wood chip of various species used in the manufacture of pulp.

3.3.39 Classification of Occupancy Hazards for Portable Fire Extinguishers.

3.3.39.1 ***Extra (High) Hazard.*** Extra hazard occupancies are locations where the total amount of Class A combustibles and Class B flammables present, in storage, production, use, finished product, or combination thereof, is over and above those expected in occupancies classed as ordinary (moderate) hazard. These occupancies could consist of woodworking; vehicle repair; aircraft and boat servicing; cooking areas; individual product display showrooms; product convention center displays; and storage and manufacturing processes such as painting, dipping, and coating, including flammable liquid handling. Also included is warehousing of or in-process storage of other than Class I and Class II commodities. [**10,** 2002]

3.3.39.2 ***Light (Low) Hazard.*** Light hazard occupancies are locations where the total amount of Class A combustible materials, including furnishings, decorations, and contents, is of minor quantity. This can include some buildings or rooms occupied as offices, classrooms, churches, assembly halls, guest room areas of hotels/motels, and so forth. This classification anticipates that the majority of content items are either noncombustible or so arranged that a fire is not likely to spread rapidly. Small amounts of Class B flammables used for duplicating machines, art departments, and so forth, are included, provided that they are kept in closed containers and safely stored. [**10,** 2002]

3.3.39.3 *Ordinary (Moderate) Hazard.* Ordinary hazard occupancies are locations where the total amount of Class A combustibles and Class B flammables are present in greater amounts than expected under light (low) hazard occupancies. These occupancies could consist of dining areas, mercantile shops and allied storage, light manufacturing, research operations, auto showrooms, parking garages, workshop or support service areas of light (low) hazard occupancies, and warehouses containing Class I or Class II commodities as defined by NFPA 13, *Standard for the Installation of Sprinkler Systems.* [**10,** 2002]

3.3.40 Cleanroom. A room in which the concentration of airborne particles is controlled to specified limits, including areas below the raised floor and above the ceiling grid if these areas are part of the air path and within the rated construction. [*5000,* 2006]

3.3.41 Clean Zone. A defined space in which the concentration of airborne particles is controlled to specified limits. [**318,** 2006]

3.3.42 Clear Space. An area free of combustible materials but that can contain noncombustible materials that cannot transmit an exposure fire.

3.3.43 Closed System Use. See 3.3.244.1.

3.3.44 Clothes Dryer. A device used to dry wet laundry by means of heat derived from the combustion of fuel or from electric heating elements. [**211,** 2003]

3.3.45 Code.

3.3.45.1 *Building Code.* The building code referenced in Section 2.2.

3.3.45.2 *Electrical Code.* The electrical code referenced in Section 2.2.

3.3.45.3 *Mechanical Code.* The mechanical code referenced in Section 2.2.

3.3.45.4 *Plumbing Code.* The plumbing code referenced in Section 2.2.

3.3.46 Cold Deck. A single ranked pile of logs with individual logs of regular or irregular length usually 20 ft to 50 ft (6.1 m to 15.2 m) long, but greater than 8 ft (2.4 m) long.

3.3.47 Column (Paper). A single vertical stack of rolls of paper.

3.3.48 Combustible (Material). A material that, in the form in which it is used and under the conditions anticipated, will ignite and burn; a material that does not meet the definition of noncombustible or limited-combustible. [*101,* 2006]

3.3.49* Combustible Dust. A combustible particulate solid that presents a fire or deflagration hazard when suspended in air or some other oxidizing medium over a range of concentrations, regardless of particle size or shape. [**654,** 2006]

3.3.50* Combustible Fiber. Any material in a fibrous or shredded form that readily ignites when heat sources are present.

3.3.51 Combustible Liquid. See 3.3.148.1.

3.3.52 Combustible Particulate Solid. See 3.3.216.1.

3.3.53 Combustible Refuse. All combustible or loose rubbish, litter, or waste materials generated by an occupancy that are refused, rejected, or considered worthless and are disposed of by incineration on the premises where generated or periodically transported from the premises.

3.3.54* Combustible Waste. Combustible or loose waste material that is generated by an establishment or process and, if salvageable, is retained for scrap or reprocessing on the premises where generated or transported to a plant for processing.

3.3.55 Combustion. A chemical process of oxidation that occurs at a rate fast enough to produce heat and usually light in the form of either a glow or flame.

3.3.56 Commodity. Combinations of products, packing material, and container upon which the commodity classification is based. [**13,** 2002]

3.3.57* Common Path of Travel. The portion of exit access that must be traversed before two separate and distinct paths of travel to two exits are available. [*101,* 2006]

3.3.58 Compartment.

3.3.58.1* *Fire Compartment.* A space within a building that is enclosed by fire barriers on all sides, including the top and bottom. [*101,* 2006]

3.3.58.2* *Smoke Compartment.* A space within a building enclosed by smoke barriers on all sides, including the top and bottom. [*101,* 2006]

3.3.59 Condition, Existing. See 3.3.91.

3.3.60 Construction Documents. Documents that consist of scaled design drawings and specifications for the purpose of construction of new facilities or modification to existing facilities. *(See also 3.3.207, Shop Drawings.)*

3.3.61 Consumer Fireworks. See 3.3.111.1.

3.3.62 Consumer Fireworks Retail Sales Area. See 3.3.13.2.

3.3.63 Consumer Fireworks Retail Sales Facility (CFRS Facility). A permanent or temporary building or structure, CFRS stand, tent, canopy, or membrane structure that is used primarily for the retail display and sale of consumer fireworks to the public. [**1124,** 2006]

3.3.64* Consumer Fireworks Retail Sales (CFRS) Stand. A temporary or permanent building or structure that has a floor area not greater than 800 ft^2 (74 m^2), other than tents, canopies, or membrane structures, that is used primarily for the retail display and sale of consumer fireworks to the public. [**1124,** 2006]

3.3.65 Container. A vessel, including cylinders, tanks, portable tanks, and cargo tanks, used for transporting or storing materials.

3.3.65.1 *ASME Container.* A container constructed in accordance with the ASME Code. [**58,** 2004]

3.3.65.2 *Closed Container.* A container as herein defined, so sealed by means of a lid or other device that neither liquid nor vapor will escape from it at ordinary temperatures. [**30A,** 2003]

3.3.65.3 *Compressed Gas Container.* A pressure vessel designed to hold compressed gas at an absolute pressure greater than 1 atmosphere at 68°F (20°C) that includes cylinders, containers, and tanks. [**55,** 2005]

3.3.65.4 *Container (Flammable or Combustible Liquid).* Any vessel of 119 gal (450 L) or less capacity used for transporting or storing liquids. [**30,** 2003]

3.3.65.5 *Cryogenic Fluids Container.* A cryogenic vessel used for transportation, handling, or storage.

3.3.65.6 *LP-Gas Container.* A vessel, including cylinders, tanks, portable tanks, and cargo tanks, used for the transporting or storing of LP-Gases. [**58,** 2004]

3.3.66 Control Area. See 3.3.13.3.

3.3.67* Conventional Pallets. A material-handling aid designed to support a unit load with openings to provide access for material-handling devices. [**13,** 2002]

3.3.68 Cooking Fire. The noncommercial, residential burning of materials not exceeding 3 ft (0.9 m) in diameter and 2 ft (0.6 m) in height, other than rubbish in which the fuel burned is contained in an outdoor fireplace, a barbecue grill, or a barbecue pit for the purpose of preparing food.

3.3.69 Cordwood. Logs 8 ft (2.4 m) or less in length customarily intended for pulpwood or fuel uses.

3.3.70 Core. The central tube around which paper is wound to form a roll. [**13,** 2002]

3.3.71* Corrosive. A chemical that causes visible destruction of, or irreversible alterations in, materials by chemical action at the site of contact.

3.3.72* Covered Fuse. A fuse or designed point of ignition that is protected against accidental ignition by contact with a spark, smoldering items, or small open flame. [**1124,** 2006]

3.3.73 Crude Petroleum. Hydrocarbon mixtures that have a flash point below 150°F (65.6°C) and that have not been processed in a refinery. [**30,** 2003]

3.3.74 Cryogenic Fluid. A fluid with a boiling point lower than –130°F (–90°C) at an absolute pressure of 14.7 psia (101.325 kPa). [**55,** 2005]

3.3.75* Cultural Properties. Buildings, structures, or sites, or portions thereof, that are culturally significant, or that house culturally significant collections. [**914,** 2001]

3.3.76 Cylinder. A pressure vessel designed for pressures higher than 40 psia (276 kPa) and having a circular cross-section. It does not include a portable tank, multiunit tank car tank, cargo tank, or tank car. [**55,** 2005]

3.3.76.1 *Cylinder Containment Vessel.* A gastight recovery vessel designed so that a leaking compressed gas container can be placed within its confines, thereby encapsulating the leaking container. [**55,** 2005]

3.3.77 Deflagration. Propagation of a combustion zone at a velocity that is less than the speed of sound in the unreacted medium. [**68,** 2002]

3.3.78 Detectors.

3.3.78.1 *Air Sampling–Type Detector.* A detector that consists of a piping or tubing distribution network that runs from the detector to the area(s) to be protected. An aspiration fan in the detector housing draws air from the protected area back to the detector through air sampling ports, piping, or tubing. At the detector, the air is analyzed for fire products.

3.3.78.2* *Fixed-Temperature Detector.* A device that responds when its operating element becomes heated to a predetermined level. [*72,* 2002]

3.3.78.3 *Heat Detector.* A fire detector that detects either abnormally high temperature or rate of temperature rise, or both. [*72,* 2002]

3.3.78.4* *Line-Type Detector.* A device in which detection is continuous along a path. [*72,* 2002]

3.3.78.5 *Smoke Detector.* A device that detects visible or invisible particles of combustion. [*72,* 2002]

3.3.78.6 *Spot-Type Detector.* A detector in which the detecting element is concentrated at a particular location. Typical examples are bimetallic detectors, fusible alloy detectors, certain pneumatic rate-of-rise detectors, certain smoke detectors, and thermoelectric detectors. [*72,* 2002]

3.3.79 Detonation. Propagation of a combustion zone at a velocity that is greater than the speed of sound in the unreacted medium. [**68,** 2002]

3.3.80 Distillery. A plant or that portion of a plant where liquids produced by fermentation are concentrated and where the concentrated products are also mixed, stored, or packaged. [**30,** 2003]

3.3.81 Distributor. A business engaged in the sale or resale, or both of compressed gases or cryogenic fluids, or both. [**55,** 2005]

3.3.82 DOT. U.S. Department of Transportation.

3.3.83 Driveway. A clear space suitable for fire-fighting operations by motorized fire apparatus.

3.3.84 Dwelling Unit. One or more rooms arranged for complete, independent housekeeping purposes, with space for eating, living, and sleeping; facilities for cooking; and provisions for sanitation. [*5000,* 2006]

3.3.84.1 *One- and Two-Family Dwelling Unit.* See 3.3.165.19.1.

3.3.85 Emergency. A fire, explosion, or hazardous condition that poses an immediate threat to the safety of life or damage to property.

3.3.86 Emergency Relief Venting. An opening, construction method, or device that will automatically relieve excessive internal pressure due to an exposure fire. [**30,** 2003]

3.3.87 Excess Flow Control. A fail-safe system or approved means designed to shut off flow due to a rupture in pressurized piping systems. [**55,** 2005]

3.3.88 Excess Flow Valve. A valve inserted into a compressed gas cylinder, portable tank, or stationary tank that is designed to positively shut off the flow of gas in the event that its predetermined flow is exceeded.

3.3.89* Exhausted Enclosure. An appliance or piece of equipment that consists of a top, a back, and two sides providing a means of local exhaust for capturing gases, fumes, vapors, and mists. [*5000,* 2006]

3.3.90* Existing. That which is already in existence on the date this edition of the *Code* goes into effect. [*101,* 2006]

3.3.91 Existing Condition. Any situation, circumstance, or physical makeup of any structure, premise, or process that was ongoing or in effect prior to the adoption of this *Code.* [**1141,** 2003]

3.3.92* Exit. That portion of a means of egress that is separated from all other spaces of a building or structure by con-

struction or equipment as required to provide a protected way of travel to the exit discharge. [*101*, 2006]

3.3.92.1* ***Horizontal Exit.*** A way of passage from one building to an area of refuge in another building on approximately the same level, or a way of passage through or around a fire barrier to an area of refuge on approximately the same level in the same building that affords safety from fire and smoke originating from the area of incidence and areas communicating therewith. [*101*, 2006]

3.3.93 Exit Access. That portion of a means of egress that leads to an exit. [*101*, 2006]

3.3.94 Exit Discharge. That portion of a means of egress between the termination of an exit and a public way. [*101*, 2006]

3.3.95 Explosion. The bursting or rupture of an enclosure or a container due to the development of internal pressure from a deflagration. [**69,** 2002]

3.3.96* Explosive Material. Any chemical compound, mixture, or device, the primary or common purpose of which is to function by explosion. [*5000*, 2006]

3.3.97 Facility. As applied to access and water supply, a structure or use in a fixed location including exterior storage, use, and handling areas that relates to the occupancies and operations covered by this *Code.*

3.3.97.1 ***Hazardous Material Storage Facility.*** See 3.3.131.

3.3.97.2 ***Limited Care Facility.*** See 3.3.165.15.

3.3.97.3 ***Motor Fuel Dispensing Facility.*** See 3.3.165.24.

3.3.97.3.1 ***Fleet Vehicle Motor Fuel Dispensing Facility.*** See 3.3.165.24.1.

3.3.97.3.2 ***Marine Motor Fuel Dispensing Facility.*** See 3.3.165.24.2.

3.3.97.3.3 ***Motor Fuel Dispensing Facility Located Inside a Building.*** See 3.3.165.24.3.

3.3.98 Fines (Wood). Small pieces or splinters of wood byproducts that can pass through a 0.25 in. (6.4 mm) screen.

3.3.99 Fire.

3.3.99.1 ***Class A Fires.*** Fires in ordinary combustible materials, such as wood, cloth, paper, rubber, and many plastics. [**10,** 2002]

3.3.99.2 ***Class B Fires.*** Fires in flammable liquids, combustible liquids, petroleum greases, tars, oils, oil-based paints, solvents, lacquers, alcohols, and flammable gases. [**10,** 2002]

3.3.99.3 ***Class C Fires.*** Fires that involve energized electrical equipment. [**10,** 2002]

3.3.99.4 ***Class D Fires.*** Fires in combustible metals, such as magnesium, titanium, zirconium, sodium, lithium, and potassium. [**10,** 2002]

3.3.99.5 ***Class K Fires.*** Fires in cooking appliances that involve combustible cooking media (vegetable or animal oils and fats. [**10,** 2002]

3.3.100 Fire, Recreational. See 3.3.197.

3.3.101 Fire Alarm System. See 3.3.233.8.

3.3.102 Fire Compartment. See 3.3.58.1.

3.3.103 Fire Door Assembly. Any combination of a fire door, a frame, hardware, and other accessories that together provide a specific degree of fire protection to the opening. [**80,** 1999]

3.3.104 Fire Hazard. Any situation, process, material, or condition that, on the basis of applicable data, can cause a fire or explosion or that can provide a ready fuel supply to augment the spread or intensity of a fire or explosion, all of which pose a threat to life or property. [**914,** 2001]

3.3.105* Fire Hydrant. A valved connection on a water supply system having one or more outlets and that is used to supply hose and fire department pumpers with water. [**1141,** 2003]

3.3.106 Fire Department Access Road. The road or other means developed to allow access and operational setup for fire-fighting and rescue apparatus.

3.3.107* Fire Lane. A fire department access road, which is marked with approved signs or other approved notices.

3.3.108 Fire Point. The lowest temperature at which a liquid will ignite and achieve sustained burning when exposed to a test flame in accordance with ASTM D 92, *Standard Test Method for Flash and Fire Points by Cleveland Open Cup.* [**30,** 2003]

3.3.109 Fire Retardant. A liquid, solid, or gas that tends to inhibit combustion when applied on, mixed in, or combined with combustible materials.

3.3.110 Fire Watch. The assignment of a person or persons to an area for the express purpose of notifying the fire department, the building occupants, or both of an emergency; preventing a fire from occurring; extinguishing small fires; or protecting the public from fire or life safety dangers.

3.3.111* Fireworks. Any composition or device for the purpose of producing a visible or an audible effect for entertainment purposes by combustion, deflagration, or detonation, and that meets the definition of *Consumer Fireworks* or *Display Fireworks* as set forth in this *Code.* [**1124,** 2006]

3.3.111.1* ***Consumer Fireworks.*** Small fireworks devices containing restricted amounts of pyrotechnic composition, designed primarily to produce visible or audible effects by combustion, that comply with the construction, chemical composition, and labeling regulations of the U.S. Consumer Product Safety Commission (CPSC), as set forth in CPSC 16 CFR 1500 and 1507, 49 CFR 172, and APA Standard 87-1, *Standard for the Construction and Approval for Transportation of Fireworks, Novelties, and Theatrical Pyrotechnics.* [**1124,** 2006]

3.3.111.2* ***Display Fireworks.*** Large fireworks devices that are explosive materials intended for use in fireworks displays and designed to produce visible or audible effects by combustion, deflagration, or detonation, as set forth in CPSC 16 CFR 1500 and 1507, 49 CFR 172, and APA Standard 87-1, *Standard for the Construction and Approval for Transportation of Fireworks, Novelties, and Theatrical Pyrotechnics.* [**1124,** 2006]

3.3.112 Flame Break. A solid material without holes or other openings, used to retard the spread of flame. [**1124,** 2006]

3.3.113* Flame Spread. The propagation of flame over a surface. [*101*, 2006]

3.3.114 Flame Spread Index. A comparative measure, expressed as a dimensionless number, derived from visual measurements of the spread of flame versus time for a material tested in accordance with NFPA 255, *Standard Method of Test of Surface Burning Characteristics of Building Materials*, ASTM E 84, *Standard Test Method for Surface Burning Characteristics of Building Materials*, or UL 723, *Standard for Test for Surface Burning Characteristics of Burning Materials.* [***101,*** 2006]

3.3.115 Flammable Vapors. Flammable vapors are the concentration of flammable constituents in air that exceed 25 percent of their lower flammability limit (LFL).

3.3.116* Flash Point. The minimum temperature of a liquid at which sufficient vapor is given off to form an ignitible mixture with the air, near the surface of the liquid or within the vessel used, as determined by the appropriate test procedure and apparatus specified in 1.7.4 of NFPA 30, *Flammable and Combustible Liquids Code.* [**30,** 2003]

3.3.117 Floor Area.

3.3.117.1* ***Gross Floor Area.*** The floor area within the inside perimeter of the outside walls of the building under consideration with no deduction for hallways, stairs, closets, thickness of interior walls, columns, or other features. [***5000,*** 2006]

3.3.117.2 ***Net Floor Area.*** The floor area within the inside perimeter of the outside walls, or the outside walls and fire walls of the building under consideration with deductions for hallways, stairs, closets, thickness of interior walls, columns, or other features. [***5000,*** 2006]

3.3.118 Forecasting. The ability to predict fire progression in a scrap tire storage location prior to the completion of the inventory fire break using heavy equipment.

3.3.119* Fugitive Emissions. Releases of flammable vapor that continuously or intermittently occur from process equipment during normal operations. [**30,** 2003]

3.3.120 Gallon. U.S. Standard. 1 U.S. gal = 0.833 Imperial gal = 231 in.^{3} = 3.785 L. [**58,** 2004]

3.3.121 Garage. A building or a portion of a building in which one or more self-propelled vehicles carrying volatile flammable liquid for fuel or power are kept for use, sale, storage, rental, repair, exhibition, or demonstrating purposes, and all that portion of a building that is on or below the floor or floors in which such vehicles are kept and that is not separated therefrom by suitable cutoffs. [***5000,*** 2006]

3.3.122 Gas.

3.3.122.1* ***Compressed Gas.*** A material, or mixture of materials, that (1) is a gas at 68°F (20°C) or less at 14.7 psia (101.3 kPa) of pressure, and (2) has a boiling point of 68°F (20°C) or less at 14.7 psia (101.3 kPa) that is either liquefied, nonliquefied, or in solution, except those gases that have no other health or physical hazard properties are not considered to be compressed until the pressure in the packaging exceeds 41 psia (282.5 kPa) at 68° (20°C). [***5000,*** 2006]

3.3.122.1.1 ***Compressed Gas Mixtures.*** A mixture of two or more compressed gases contained in a packaging, the hazard properties of which are represented by the properties of the mixture as a whole.

3.3.122.1.2 ***Compressed Gases in Solution.*** Nonliquefied gases that are dissolved in a solvent.

3.3.122.1.3 ***Liquefied Compressed Gases.*** Gases that are contained in a packaging under the charged pressure and are partially liquid at a temperature of 68°F (20°C).

3.3.122.1.4 ***Nonliquefied Compressed Gases.*** Gases, other than those in solution, that are contained in a packaging under the charged pressure and are entirely gaseous at a temperature of 68°F (20°C).

3.3.122.2 ***Corrosive Gas.*** A gas that causes visible destruction of or irreversible alterations in living tissue by chemical action at the site of contact. [**55,** 2005]

3.3.122.3 ***Flammable Gas.*** A material that is a gas at 68°F (20°C) or less at an absolute pressure of 14.7 psia (101.325 kPa), that is ignitable at an absolute pressure of 14.7 psia (101.325 kPa) when in a mixture of 13 percent or less by volume with air, or that has a flammable range at an absolute pressure of 14.7 psia (101.325 kPa) with air of at least 12 percent, regardless of the lower limit. [**55,** 2005]

3.3.122.4 ***Flammable Liquefied Gas.*** A liquefied compressed gas that, when under a charged pressure, is partially liquid at a temperature of 68°F (20°C) and is flammable. [**55,** 2005]

3.3.122.5 ***Highly Toxic Gas.*** A chemical that has a median lethal concentration (LC_{50}) in air of 200 ppm by volume or less of gas or vapor, or 2 mg/L or less of mist, fume, or dust, when administered by continuous inhalation for 1 hour (or less if death occurs within 1 hour) to albino rats weighing between 0.44 lb and 0.66 lb (200 g and 300 g) each. [**55,** 2005]

3.3.122.6* ***Inert Gas.*** Any gas that is nonflammable, nonreactive, and noncontaminating.

3.3.122.7 ***Irritant Gas.*** A chemical that is not corrosive, but that causes a reversible inflammatory effect on living tissue by chemical action at the site of contact. A chemical is a skin irritant if, when tested on the intact skin of albino rabbits by the methods of 16 CFR 1500.41, for an exposure of 4 or more hours or by other appropriate techniques, it results in an empirical score of 5 or more. A chemical is classified as an eye irritant if so determined under the procedure listed in 16 CFR 1500.42, or other appropriate techniques. [**55,** 2005]

3.3.122.8 ***Liquefied Gas.*** A gas, other than in solution, that in a packaging under the charged pressure exists both as a liquid and a gas at a temperature of 68°F (20°C). [**30,** 2003]

3.3.122.9 ***Liquefied Natural Gas (LNG).*** A fluid in the cryogenic liquid state that is composed predominantly of methane and that can contain minor quantities of ethane, propane, or nitrogen. [**52,** 2006]

3.3.122.10 ***Liquefied Petroleum Gas (LP-Gas).*** Any material having a vapor pressure not exceeding that allowed for commercial propane that is composed predominantly of the following hydrocarbons, either by themselves or as mixtures: propane, propylene, butane (normal butane or isobutane), and butylenes. [**58,** 2004]

3.3.122.11 ***Nonflammable Gas.*** A gas that does not meet the definition of a flammable gas. [**55,** 2005]

3.3.122.12* ***Other Gas.*** A gas that is not a corrosive gas, flammable gas, highly toxic gas, oxidizing gas, pyrophoric gas, toxic gas, or unstable reactive gas with a hazard rating of Class 2, Class 3, or Class 4 gas. [**55,** 2005]

3.3.122.13 ***Oxidizing Gas.*** A gas that can support and accelerate combustion of other materials. [**55,** 2005]

3.3.122.14 ***Pyrophoric Gas.*** A gas with an autoignition temperature in air at or below 130°F (54.4°C). [**55,** 2005]

3.3.122.15 ***Scavenged Gas.*** A residual process gas that is collected for treatment or release at a location remote from the site of use.

3.3.122.16 ***Simple Asphyxiant Gas.*** A gas that does not provide sufficient oxygen to support life and that has none of the other physical or health hazards.

3.3.122.17 ***Toxic Gas.*** A gas with a median lethal concentration (LC_{50}) in air of more than 200 ppm, but not more than 2000 ppm by volume of gas or vapor, or more than 2 mg/L, but not more than 20 mg/L of mist, fume, or dust, when administered by continuous inhalation for 1 hour (or less if death occurs within 1 hour) to albino rats weighing between 0.44 lb and 0.66 lb (200 g and 300 g) each. [**55,** 2005]

3.3.122.18* ***Unstable Reactive Gas.*** A gas that, in the pure state or as commercially produced, will vigorously polymerize, decompose, or condense, become self-reactive, or otherwise undergo a violent chemical change under conditions of shock, pressure, or temperature. [**55,** 2005]

3.3.123* Gas Cabinet. A fully enclosed, noncombustible enclosure used to provide an isolated environment for compressed gas cylinders in storage and use. [***5000,*** 2006]

3.3.124 Gas Manufacturer/Producer. A business that produces compressed gases or cryogenic fluids, or both, or fills portable or stationary gas containers, cylinders, or tanks. [**55,** 2005]

3.3.125 Gas Room. See 3.3.200.2.

3.3.126 Ground Kettle. A container that could be mounted on wheels and is used for heating tar, asphalt, or similar substances.

3.3.127 Handling. The deliberate movement of material by any means to a point of storage or use.

3.3.128* Hazard of Contents.

3.3.128.1 ***High Hazard.*** High hazard contents include materials defined as hazardous materials in 3.3.156.3, whether stored, used, or handled. [***5000:***6.3.2.4.1.1]

3.3.128.1.1 ***High Hazard Level 1 Contents.*** High hazard Level 1 contents include materials that present a detonation hazard, limited to, explosives; unclassified detonable organic peroxides; Class 4 oxidizers; detonable pyrophoric materials ; and unstable (reactive) materials, Class 3 detonable, and Class 4. [***5000:***6.3.2.4.2]

3.3.128.1.2 ***High Hazard Level 2 Contents.*** High hazard Level 2 contents include materials that present a deflagration hazard or a hazard from accelerated burning, including but not limited to: Class I, Class II or Class III-A flammable or combustible liquids that are used or stored in normally open containers or systems, or in closed containers or systems at gauge pressures of more than 15 psi (103 kPa); combustible dusts stored, used, or generated in a manner creating a severe fire or explosion hazard; flammable gases and flammable cryogenic liquids; Class I organic peroxides; Class 3 solid or liquid oxidizers that are used or stored in normally open containers or systems, or in closed containers or systems at gauge pressures of more than 15 psi (103 kPa); nondetonable pyrophoric materials; Class 3 nondetonable unstable (reactive) materials; and Class 3 water-reactive materials. [***5000:***6.3.2.4.3]

3.3.128.1.3 ***High Hazard Level 3 Contents.*** High hazard Level 3 contents include materials that readily support combustion or present a physical hazard including, but not limited to, Level 2 and Level 3 aerosols; Class I, Class II, or Class III-A flammable or combustible liquids that are used or stored in normally closed containers or systems at gauge pressures of less than 15 psi (103 kPa); consumer fireworks, 1.4 G; flammable solids, other than dusts classified as high hazard Level 2, stored, used, or generated in a manner creating a high fire hazard; Class II and Class III organic peroxides; Class 2 solid or liquid oxidizers; Class 3 solid or liquid oxidizers that are used or stored in normally closed containers or systems at gauge pressures of less than 15 psi (103 kPa); oxidizing gases and oxidizing cryogenic liquids; Class 2 unstable (reactive) materials; and Class 2 water-reactive materials. [***5000:***6.3.2.4.4]

3.3.128.1.4 ***High Hazard Level 4 Contents.*** High hazard Level 4 contents include materials that are acute health hazards including, but not limited to, corrosives; highly toxic materials; and toxic materials [***5000:***6.3.2.4.5]

3.3.128.1.5 ***High Hazard Level 5 Contents.*** High hazard Level 5 contents include hazardous production materials (HPM) used in the fabrication of semiconductors or semiconductor research and development. [***5000:***6.3.2.4.6]

3.3.128.2* ***Low Hazard Contents.*** Contents that are of such low combustibility that no self-propagating fire therein can occur. [***5000:***6.3.2.2]

3.3.128.3* ***Ordinary Hazard Contents.*** Contents that are likely to burn with moderate rapidity or to give off a considerable volume of smoke. [***5000:***6.3.2.3]

3.3.129* Hazard Rating. The numerical rating of the health, flammability, and self-reactivity, and other hazards of the material, including its reaction with water, specified in NFPA 704, *Standard System for the Identification of the Hazards of Materials for Emergency Response.* [**55,** 2005]

3.3.130 Hazardous Material. See 3.3.156.3.

3.3.131 Hazardous Material Storage Facility. A building, a portion of a building, or exterior area used for the storage of hazardous materials in excess of exempt amounts.

3.3.132 Hazardous Materials Storage Locker. A movable prefabricated structure, manufactured primarily at a site other than the final location of the structure and transported completely assembled or in a ready-to-assemble package to the final location. It is intended to meet local, state, and federal requirements for outside storage of hazardous materials. [**30,** 2003]

3.3.133* Hazardous Reaction or Hazardous Chemical Reaction. Reactions that result in dangers beyond the fire problems relating to flash point and boiling point of either the reactants or of the products. [**30,** 2003]

3.3.134* Heliport. An identifiable area located on land, on water, or on a structure, that also includes any existing buildings or facilities thereon, used or intended to be used for landing and takeoff of helicopters. [**418,** 2001]

3.3.135 Hogged Material. Mill waste consisting mainly of hogged bark but possibly including a mixture of bark, chips, dust, or other by-products from trees; also includes material designated as hogged fuel.

3.3.136 Home.

3.3.136.1 ***Day-Care Home.*** See 3.3.165.6.

3.3.136.2 ***Nursing Home.*** See 3.3.165.18.

3.3.137 Horizontal Exit. See 3.3.92.1.

3.3.138* Immediately Dangerous to Life and Health (IDLH). A concentration of airborne contaminants, normally expressed in parts per million (ppm) or milligrams per cubic meter, that represents the maximum level from which one could escape within 30 minutes without any escape-impairing symptoms or irreversible health effects. [**55,** 2005]

3.3.139 Imminent Danger. A condition or practice in an occupancy or structure that poses a danger that could reasonably be expected to cause death, serious physical harm, or serious property loss.

3.3.140* Incident Commander. The person who is responsible for all decisions relating to the management of the incident and is in charge of the incident site. [**472,** 2002]

3.3.141 Incidental Liquid Use or Storage. Use or storage as a subordinate activity to that which establishes the occupancy or area classification. [**30,** 2003]

3.3.142 Indicating Valve. See 3.3.245.1.

3.3.143 Initiating Device Circuit. A circuit to which automatic or manual initiating devices are connected where the signal received does not identify the individual device operated. [***72,*** 2002]

3.3.144 Inside Liquid Storage Area. See 3.3.13.6.

3.3.145 Jurisdiction. A governmental unit or political division or a subdivision.

3.3.146 Limit.

3.3.146.1* ***Ceiling Limit.*** The maximum concentration of an airborne contaminant to which a person can be exposed. [***5000,*** 2006]

3.3.146.2* ***Permissible Exposure Limit (PEL).*** The maximum permitted 8-hour, time-weighted average concentration of an airborne contaminant. [**55,** 2005]

3.3.146.3* ***Short-Term Exposure Limit (STEL).*** The concentration to which it is believed that workers can be exposed continuously for a short period of time without suffering from irritation, chronic or irreversible tissue damage, or narcosis of a degree sufficient to increase the likelihood of accidental injury, impairment of self-rescue, or the material reduction of work efficiency, without exceeding the daily permissible exposure limit (PEL). [**55,** 2005]

3.3.147* Limited-Combustible (Material). Refers to a building construction material not complying with the definition of noncombustible *(see 3.3.156.9)* that, in the form in which it is used, has a potential heat value not exceeding 3500 Btu/lb (8141 kJ/kg), where tested in accordance with NFPA 259, *Standard Test Method for Potential Heat of Building Materials,* and includes either of the following: (1) materials having a structural base of noncombustible material, with a surfacing not exceeding a thickness of ⅛ in. (3.2 mm) that has a flame spread index not greater than 50; (2) materials, in the form and thickness used, having neither a flame spread index greater than 25 nor evidence of continued progressive combustion, and of such composition that surfaces that would be exposed by cutting through the material on any plane would have neither a flame spread index greater than 25 nor evidence of continued progressive combustion. [***101,*** 2006]

3.3.148 Liquid.

3.3.148.1 ***Combustible Liquid.*** Any liquid that has a closed-cup flash point at or above 100°F (37.8°C), as determined by the test procedures and apparatus set forth in 1.7.4 of NFPA 30, *Flammable and Combustible Liquids Code.* Combustible liquids are classified as Class II or Class III as follows: (1) *Class II Liquid* — any liquid that has a flash point at or above 100°F (37.8°C) and below 140°F (60°C); (2) *Class IIIA* — any liquid that has a flash point at or above 140°F (60°C), but below 200°F (93°C); (3) *Class IIIB* — any liquid that has a flash point at or above 200°F (93°C). [**30,** 2003]

3.3.148.2 ***Flammable Liquid.*** Any liquid that has a closed-cup flash point below 100°F (37.8°C), as determined by the test procedures and apparatus set forth in 1.7.4 of NFPA 30, *Flammable and Combustible Liquids Code.* Flammable liquids are classified as Class I as follows: (a) *Class I Liquid* — any liquid that has a closed-cup flash point below 100°F (37.8°C) and a Reid vapor pressure not exceeding 40 psia (2068.6 mm Hg) at 100°F (37.8°C), as determined by ASTM D 323, *Standard Method of Test for Vapor Pressure of Petroleum Products (Reid Method).* Class I liquids are further classified as follows: (1) Class IA liquids — those liquids that have flash points below 73°F (22.8°C) and boiling points below 100°F (37.8°C); (2) Class IB liquids — those liquids that have flash points below 73°F (22.8°C) and boiling points at or above 100°F (37.8°C); (3) Class IC liquids — those liquids that have flash points at or above 73°F (22.8°C), but below 100°F (37.8°C). [**30,** 2003]

3.3.148.3 ***Highly Volatile Liquid.*** A liquid with a boiling point of less than 68°F (20°C).

3.3.148.4 ***Stable Liquid.*** Any liquid not defined as unstable. [**30,** 2003]

3.3.149 Log. Felled tree from which all the branches have been removed.

3.3.150 Loose House. A separate detached building in which unbaled combustible fibers are stored.

3.3.151 Lumber. Wood from felled trees having a section produced by lengthwise sawing or chipping of logs or other solid wood of large dimensions and possible crosscutting and/or further machining to obtain a certain size and includes boards, dimension lumber, timber, and similar wood products.

3.3.152 Manual Fire Alarm Box. A manually operated device used to initiate an alarm signal. [***72,*** 2002]

3.3.153 Manual Pull Station. See 3.3.152, Manual Fire Alarm Box.

3.3.154 Marine Terminal. A facility comprising one or more berths, slips, piers, wharves, loading and unloading areas, warehouses, and storage yards used for the transfer of people and/or cargo between waterborne carriers and land. [**307,** 2006]

3.3.155 Marine Vessel. A water craft or other artificial contrivance used as a means of transportation in or on the water.

3.3.156 Material.

3.3.156.1 ***Combustible (Material).*** See 3.3.48.

3.3.156.2 ***Compatible Material.*** A material that, when in contact with an oxidizer, will not react with the oxidizer or promote or initiate its decomposition. [**430,** 2004]

3.3.156.3 ***Hazardous Material.*** A chemical or substance that is classified as a physical hazard material or a health hazard material, whether the chemical or substance is in usable or waste condition. *(See also 3.3.156.5, Health Hazard Material, and 3.3.156.10, Physical Hazard Material.)* [***5000,*** 2006]

3.3.156.4 ***Hazardous Production Material (HPM).*** A solid, liquid, or gas associated with semiconductor manufacturing that has a degree-of-hazard rating of 3 or 4 in health, flammability, instability, or water reactivity in accordance with NFPA 704 and that is used directly in research, laboratory, or production processes that have as their end product materials that are not hazardous. [***5000,*** 2006]

3.3.156.5 ***Health Hazard Material.*** A chemical or substance classified as a toxic, highly toxic, or corrosive material in accordance with the definitions set forth in this *Code.* [***5000,*** 2006]

3.3.156.6* ***Highly Toxic Material.*** A material that produces a lethal dose or lethal concentration that falls within any of following categories: (1) a chemical that has a median lethal dose (LD_{50}) of 50 mg/kg or less of body weight when administered orally to albino rats weighing between 200 g and 300 g each; (2) a chemical that has a median lethal dose (LD_{50}) of 200 mg/kg or less of body weight when administered by continuous contact for 24 hours, or less if death occurs within 24 hours, with the bare skin of albino rabbits weighing between 2 kg and 3 kg each; (3) a chemical that has a median lethal concentration (LC_{50}) in air of 200 parts per million by volume or less of gas or vapor, or 2 mg/L or less of mist, fume, or dust, when administered by continuous inhalation for 1 hour, or less if death occurs within 1 hour, to albino rats weighing between 200 g and 300 g each. [***5000,*** 2006]

3.3.156.7 ***Hogged Material.*** See 3.3.135.

3.3.156.8 ***Incompatible Material.*** Materials that, when in contact with each other, have the potential to react in a manner that generates heat, fumes, gases or by-products that are hazardous to life and property. [***5000,*** 2006]

3.3.156.9 ***Noncombustible Material.*** A material that, in the form in which it is used and under the conditions anticipated, will not ignite, burn, support combustion, or release flammable vapors, when subjected to fire or heat. Materials that are reported as passing ASTM E 136, *Standard Test Method for Behavior of Materials in a Vertical Tube Furnace at 750 Degrees C,* shall be considered noncombustible materials. [***5000,*** 2006]

3.3.156.10 ***Physical Hazard Material.*** A chemical or substance classified as a combustible liquid, explosive, flammable cryogen, flammable gas, flammable liquid, flammable solid, organic peroxide, oxidizer, oxidizing cryogen, pyrophoric, unstable (reactive), or water-reactive material. [***5000,*** 2006]

3.3.156.11 ***Toxic Material.*** A material that produces a lethal dose or a lethal concentration within any of the following categories: (1) a chemical or substance that has a median lethal dose (LD_{50}) of more than 50 mg/kg but not more than 500 mg/kg of body weight when administered orally to albino rats weighing between 200 g and 300 g each; (2) a chemical or substance that has a median lethal dose (LD_{50}) of more than 200 mg/kg but not more than 1000 mg/kg of body weight when administered by continuous contact for 24 hours, or less if death occurs within 24 hours, with the bare skin of albino rabbits weighing between 2 kg and 3 kg each; (3) a chemical or substance that has a median lethal concentration (LC_{50}) in air of more than 200 parts per million but not more than 2000 parts per million by volume of gas or vapor, or more than 2 mg/L but not more than 20 mg/L of mist, fume, or dust when administered by continuous inhalation for 1 hour, or less if death occurs within 1 hour, to albino rats weighing between 200 g and 300 g each. [***5000,*** 2006]

3.3.156.12* ***Unstable (Reactive) Material.*** A material that, in the pure state or as commercially produced, will vigorously polymerize, decompose, or condense, become self-reactive, or otherwise undergo a violent chemical change under conditions of shock, pressure, or temperature. [***5000,*** 2006]

3.3.156.13* ***Water-Reactive Material.*** A material that explodes; violently reacts; produces flammable, toxic, or other hazardous gases; or evolves enough heat to cause self-ignition or ignition of nearby combustibles upon exposure to water or moisture. [***5000,*** 2006]

3.3.157 Material Safety Data Sheet (MSDS). Written or printed material concerning a hazardous material that is prepared in accordance with the provisions of OSHA 29 CFR 1910.1200.

3.3.158* Maximum Allowable Quantity (MAQ). The quantity of hazardous material permitted in a control area.

3.3.159* Means of Egress. A continuous and unobstructed way of travel from any point in a building or structure to a public way consisting of three separate and distinct parts: (1) the exit access, (2) the exit, and (3) the exit discharge. [***101,*** 2006]

3.3.160 Means of Escape. A way out of a building or structure that does not conform to the strict definition of means of egress but does provide an alternate way out. [***101,*** 2006]

3.3.161 Mezzanine. An intermediate level between the floor and the ceiling of any room or space. [***101,*** 2006]

3.3.162 Motor Vehicle Fluid. A fluid that is a flammable, combustible, or hazardous material, such as crankcase fluids, fuel, brake fluids, transmission fluids, radiator fluids, and gear oil.

3.3.163 Nesting. A method of securing cylinders upright in a tight mass using a contiguous three-point contact system whereby all cylinders in a group have a minimum of three contact points with other cylinders or a solid support structure (for example, a wall or railing). [**55,** 2005]

3.3.164 Normal Temperature and Pressure (NTP). A temperature of 70°F (21.1°C) and a pressure of 1 atmosphere [14.7 psia (101.3 kPa)].

3.3.165 Occupancy. The purpose for which a building or other structure, or part thereof, is used or intended to be used. [**ASCE 7:**1.2]

3.3.165.1* ***Ambulatory Health Care Occupancy.*** A building or portion thereof used to provide services or treatment simultaneously to four or more patients that provides, on an outpatient basis, one or more of the following: (1) treatment for patients that renders the patients incapable of taking action for self-preservation under emergency conditions without the assistance of others; (2) anesthesia that renders the patients incapable of taking action for self-preservation under emergency conditions without the assistance of others; (3) emergency or urgent care for patients who, due to the nature of their injury or illness, are incapable of taking action for self-preservation under emergency conditions without the assistance of others [***101,*** 2006]

3.3.165.2* ***Apartment Building.*** A building or portion thereof containing three or more dwelling units with independent cooking and bathroom facilities. [***5000,*** 2006]

3.3.165.3* ***Assembly Occupancy.*** An occupancy (1) used for a gathering of 50 or more persons for deliberation, worship, entertainment, eating, drinking, amusement, awaiting transportation, or similar uses; or (2) used as a special amusement building, regardless of occupant load. [***101,*** 2006]

3.3.165.4 ***Bulk Merchandising Retail Building.*** A building in which the sales area includes the storage of combustible materials on pallets, in solid piles, or in racks in excess of 12 ft (3660 mm) in storage height. [***5000,*** 2006]

3.3.165.5* ***Business Occupancy.*** An occupancy used for the transaction of business other than mercantile. [***5000,*** 2006]

3.3.165.6* ***Day-Care Home.*** A building or portion of a building in which more than 3 but not more than 12 clients receive care, maintenance, and supervision, by other than their relative(s) or legal guardian(s), for less than 24 hours per day. [***101,*** 2006]

3.3.165.7* ***Day-Care Occupancy.*** An occupancy in which four or more clients receive care, maintenance, and supervision, by other than their relatives or legal guardians, for less than 24 hours per day. [***5000,*** 2006]

3.3.165.8* ***Detention and Correctional Occupancy.*** An occupancy used to house one or more persons under varied degrees of restraint or security where such occupants are mostly incapable of self-preservation because of security measures not under the occupants' control. [***5000,*** 2006]

3.3.165.8.1 ***Detention and Correctional Use Condition.*** For application of the life safety in Section 20.7, the resident user category is divided into the five use conditions.

3.3.165.8.1.1 ***Use Condition I — Free Egress.*** Free movement is allowed from sleeping areas and other spaces where access or occupancy is permitted to the exterior via means of egress that meet the requirements of NFPA *101, Life Safety Code.* [***101,*** 2006]

3.3.165.8.1.2 ***Use Condition II — Zoned Egress.*** Free movement is allowed from sleeping areas and any other occupied smoke compartment to one or more other smoke compartments. [***101,*** 2006]

3.3.165.8.1.3 ***Use Condition III — Zoned Impeded Egress.*** Free movement is allowed within individual smoke compartments, such as within a residential unit comprised of individual sleeping rooms and a group activity space, with egress impeded by remote-controlled release of means of egress from such a smoke compartment to another smoke compartment. [***101,*** 2006]

3.3.165.8.1.4 ***Use Condition IV — Impeded Egress.*** Free movement is restricted from an occupied space, and remote-controlled release is provided to allow movement from all sleeping rooms, activity spaces, and other occupied areas within the smoke compartment to another smoke compartment. [***101,*** 2006]

3.3.165.8.1.5 ***Use Condition V — Contained.*** Free movement is restricted from an occupied space, and staff-controlled manual release at each door is provided to allow movement from all sleeping rooms, activity spaces, and other occupied areas within the smoke compartment to another smoke compartment. [***101,*** 2006]

3.3.165.9* ***Dormitory.*** A building or a space in a building in which group sleeping accommodations are provided for more than 16 persons who are not members of the same family in one room, or a series of closely associated rooms under joint occupancy and single management, with or without meals, but without individual cooking facilities. [***101,*** 2006]

3.3.165.10* ***Educational Occupancy.*** An occupancy used for educational purposes through the twelfth grade by six or more persons for 4 or more hours per day or more than 12 hours per week. [***5000,*** 2006]

3.3.165.11* ***Health Care Occupancy.*** An occupancy used for purposes of medical or other treatment or care of four or more persons where such occupants are mostly incapable of self-preservation due to age, physical or mental disability, or because of security measures not under the occupants' control. [***5000,*** 2006]

3.3.165.12 ***Hospital.*** A building or portion thereof used on a 24-hour basis for the medical, psychiatric, obstetrical, or surgical care of four or more inpatients. [***101,*** 2006]

3.3.165.13* ***Hotel.*** A building or groups of buildings under the same management in which there are sleeping accommodations for more than 16 persons and primarily used by transients for lodging with or without meals. [***101,*** 2006]

3.3.165.14* ***Industrial Occupancy.*** An occupancy in which products are manufactured or in which processing, assembling, mixing, packaging, finishing, decorating, or repair operations are conducted. [***5000,*** 2006]

3.3.165.15* ***Limited Care Facility.*** A building or portion of a building used on a 24-hour basis for the housing of four or more persons who are incapable of self-preservation because of age; physical limitations due to accident or illness; or limitations such as mental retardation/developmental disability, mental illness, or chemical dependency. [***101,*** 2006]

3.3.165.16 ***Lodging or Rooming House.*** A building or portion thereof that does not qualify as a one- or two-family dwelling, that provides sleeping accommodations for a total of 16 or fewer people on a transient or permanent basis, without personal care services, with or without meals, but without separate cooking facilities for individual occupants. [***101,*** 2006]

3.3.165.17* ***Mercantile Occupancy.*** An occupancy used for the display and sale of merchandise. [***5000,*** 2006]

3.3.165.17.1 ***Class A Mercantile Occupancy.*** All mercantile occupancies having an aggregate gross area of more than 30,000 ft^2 (2800 m^2) or occupying more than three stories for sales purposes. [***101,*** 2006]

3.3.165.17.2 ***Class B Mercantile Occupancy.*** All mercantile occupancies of more than 3000 ft^2 (280 m^2), but not more than 30,000 ft^2 (2800 m^2), aggregate gross area and occupying not more than three stories for sales purposes. [***101,*** 2006]

3.3.165.17.3 ***Class C Mercantile Occupancy.*** All mercantile occupancies of not more than 3000 ft^2 (280 m^2) gross area and used for sales purposes occupying one story only. [***101,*** 2006]

3.3.165.18 ***Nursing Home.*** A building or portion of a building used on a 24-hour basis for the housing and nursing care of four or more persons who, because of mental or physical incapacity, might be unable to provide for their

own needs and safety without the assistance of another person. [*5000,* 2006]

3.3.165.19 ***One- and Two-Family Dwelling.*** One- and two-family dwellings include buildings containing not more than two dwelling units in which each dwelling unit is occupied by members of a single family with not more than three outsiders, if any, accommodated in rented rooms. [*101,* 2006]

3.3.165.19.1 ***One- and Two-Family Dwelling Unit.*** A building that contains not more than two dwelling units with independent cooking and bathroom facilities. [*5000,* 2006]

3.3.165.20* ***Parking Structure.*** A building, structure, or portion thereof used for the parking, storage, or both, of motor vehicles. [**88A,** 2002]

3.3.165.20.1 ***Basement and Underground Parking Structures.*** Parking structures that are located below grade. A basement parking structure has other occupancies above it and an underground parking structure has no occupancy other than parking above it. Basement and underground parking structures are considered as specific cases of enclosed parking structures.

3.3.165.20.2 ***Enclosed Parking Structure.*** Any parking structure that is not an open parking structure. [**88A,** 2002]

3.3.165.20.3 ***Open Parking Structure.*** A parking structure that, at each parking level, has wall openings open to the atmosphere, for an area of not less than 1.4 ft^2 for each linear foot (0.4 m^2 for each linear meter) of its exterior perimeter. Such openings are distributed over 40 percent of the building perimeter or uniformly over two opposing sides. Interior wall lines and column lines are at least 20 percent open, with openings distributed to provide ventilation. [**88A,** 2002]

3.3.165.21 ***Repair Garages.***

3.3.165.21.1 ***Major Repair Garage.*** A building or portions of a building where major repairs, such as engine overhauls, painting, body and fender work, and repairs that require draining of the motor vehicle fuel tank are performed on motor vehicles, including associated floor space used for offices, parking, or showrooms.

3.3.165.21.2 ***Minor Repair Garage.*** A building or portions of a building used for lubrication, inspection, and minor automotive maintenance work, such as engine tune-ups, replacement of parts, fluid changes (e.g., oil, antifreeze, transmission fluid, brake fluid, air conditioning refrigerants, etc.), brake system repairs, tire rotation, and similar routine maintenance work, including associated floor space used for offices, parking, or showrooms.

3.3.165.22* ***Residential Board and Care Occupancy.*** A building or portion thereof that is used for lodging and boarding of four or more residents, not related by blood or marriage to the owners or operators, for the purpose of providing personal care services. [*5000,* 2006]

3.3.165.23* ***Residential Occupancy.*** An occupancy that provides sleeping accommodations for purposes other than health care or detention and correctional. [*101,* 2006]

3.3.165.24 ***Motor Fuel Dispensing Facility.*** That portion of a property where motor fuels are stored and dispensed from fixed equipment into the fuel tanks of motor vehicles or marine craft or into approved containers, including all equipment used in connection therewith. [**30A,** 2003]

3.3.165.24.1 ***Fleet Vehicle Motor Fuel Dispensing Facility.*** A motor fuel dispensing facility at a commercial, industrial, governmental, or manufacturing property where motor fuels are dispensed into the fuel tanks of motor vehicles that are used in connection with the business or operation of that property by persons within the employ of such business or operation. [**30A,** 2003]

3.3.165.24.2 ***Marine Motor Fuel Dispensing Facility.*** A motor fuel dispensing facility at or adjacent to shore, a pier, a wharf, or a floating dock where motor fuels are dispensed into the fuel tanks of marine craft. [**30A,** 2003]

3.3.165.24.3* ***Motor Fuel Dispensing Facility Located Inside a Building.*** That portion of a motor fuel dispensing facility located within the perimeter of a building or building structure that also contains other occupancies. [**30A,** 2003]

3.3.165.25* ***Storage Occupancy.*** An occupancy used primarily for the storage or sheltering of goods, merchandise, products, vehicles, or animals. [*5000,* 2006]

3.3.165.25.1* ***Mini-Storage Building.*** A storage occupancy partitioned into areas that are rented or leased for the purposes of storing personal or business items where all of the following apply: (1) the storage areas are separated from each other by less than a 1-hour fire resistance rated barrier, (2) the owner of the facility does not have unrestricted access, and (3) the items being stored are concealed from view from outside the unit.

3.3.166 Occupant Load. The total number of persons that might occupy a building or portion thereof at any one time. [*5000,* 2006]

3.3.167 Open System Use. See 3.3.244.2.

3.3.168 Operating Unit (Vessel) or Process Unit (Vessel). The equipment in which a unit operation or unit process is conducted. *(See also 3.3.240, Unit Operation or Unit Process.)* [**30,** 2003]

3.3.169 Operating Pressure. The pressure at which a system operates.

3.3.170 Operations. A general term that includes, but is not limited to, the use, transfer, storage, and processing of liquids. [**30,** 2003]

3.3.171 Organic Peroxide. Any organic compound having a double oxygen or peroxy (-O-O-) group in its chemical structure. [**432,** 2002]

3.3.171.1* ***Organic Peroxide Formulation.*** A pure organic peroxide or a mixture of one or more organic peroxides with one or more other materials in various combinations and concentrations. [**432,** 2002]

3.3.171.2 ***Organic Peroxide Storage Area.*** See 3.3.13.7.

3.3.172 OSHA. The Occupational Safety and Health Administration of the U.S. Department of Labor. [**55,** 2005]

3.3.173* Oxidizer. Any material that readily yields oxygen or other oxidizing gas, or that readily reacts to promote or initiate combustion of combustible materials and can undergo a vigorous self-sustained decomposition due to contamination or heat exposure. For the purpose of this *Code,* oxidizers are classified according to the system listed in 3.3.173.1 through 3.3.173.4. [**430,** 2004]

3.3.173.1 *Class 1.* An oxidizer that does not moderately increase the burning rate of combustible materials with which it comes into contact.

3.3.173.2 *Class 2.* An oxidizer that causes a moderate increase in the burning rate of combustible materials with which it comes into contact.

3.3.173.3 *Class 3.* An oxidizer that causes a severe increase in the burning rate of combustible materials with which it comes into contact.

3.3.173.4 *Class 4.* An oxidizer that can undergo an explosive reaction due to contamination or exposure to thermal or physical shock and that causes a severe increase in the burning rate of combustible materials with which it comes into contact.

3.3.174* Packaged Fireworks Merchandise. A consumer fireworks device or group of consumer fireworks devices that has been packaged within an unperforated container or packaging material by the manufacturer, distributor, or seller for retail display and sale as a unit. [**1124,** 2006]

3.3.175 Packaging. A commodity wrapping, cushioning, or container. [**13,** 2002]

3.3.176 Paper. Felted sheets made from natural fibrous materials, usually vegetable but sometimes mineral or animal, and formed on a fine wire screen by means of water suspension.

3.3.177 Patch Kettle. Any pot or container with a capacity of less than 6 gal (22.7 L) used for preheating tar, asphalt, pitch, or similar substances for the repair of roofs, streets, floors, pipes, or similar objects.

3.3.178 Permissible Exposure Limit (PEL). See 3.3.146.2.

3.3.179 Permit. A document issued by the authority having jurisdiction for the purpose of authorizing performance of a specified activity.

3.3.180 Peroxide-Forming Chemical. A chemical that, when exposed to air, forms explosive peroxides that are shock sensitive, pressure sensitive, or heat sensitive.

3.3.181* Personal Care. The care of residents who do not require chronic or convalescent medical or nursing care. [*101,* 2006]

3.3.182 Pesticide. Any substance or mixture of substances intended for preventing, destroying, repelling, or mitigating any pest or for use as a plant regulator, defoliant, or desiccant. [**434,** 2002]

3.3.183 Physical Hazard. A chemical for which there is scientifically valid evidence that the chemical is an organic peroxide or oxidizer.

3.3.184 Pier. A structure, usually of greater length that width and projecting from the shore into a body of water with direct access from land, that can be either open deck or provided with a superstructure. [**307:** 2.1.15]

3.3.185 Planned Building Groups. Multiple structures constructed on a parcel of land, excluding farmland, under the ownership, control, or development by an individual, a corporation, a partnership, or a firm. [**1141,** 2003]

3.3.186 Primary Containment. The first level of containment, consisting of the inside portion of that container that comes into immediate contact on its inner surface with the material being contained.

3.3.187 Private Building. See 3.3.27.9.

3.3.188* Process or Processing. An integrated sequence of operations. [**30,** 2003]

3.3.189 Process Unit (Vessel). See 3.3.168, Operating Unit (Vessel) or Process Unit (Vessel).

3.3.190 Professional Engineer. An individual technically and legally qualified to practice the profession of engineering.

3.3.191 Proprietary Information. Information regarding compounds or ingredients used in a process or production that do not qualify as trade secrets but that provide an industry or business with a competitive advantage.

3.3.192 Protection for Exposures. Fire protection for structures on property adjacent to liquid storage that is provided by (1) a public fire department or (2) a private fire brigade maintained on the property adjacent to the liquid storage, either of which is capable of providing cooling water streams to protect the property adjacent to the liquid storage. [**30,** 2003]

3.3.193 Public Way. A street, alley, or other similar parcel of land essentially open to the outside air deeded, dedicated, or otherwise permanently appropriated to the public for public use and having a clear width and height of not less than 10 ft (3050 mm). [*101,* 2006]

3.3.194 Pyrophoric. A chemical that spontaneously ignites in air at or below a temperature of 130°F (54.5°C).

3.3.195* Rack. Any combination of vertical, horizontal, and diagonal members that supports stored materials.

3.3.195.1 *Double-Row Racks.* Two single-row racks placed back-to-back having a combined width up to 12 ft (3.7 m), with aisles at least 3.5 ft (1.1 m) on each side. [**13,** 2002]

3.3.195.2* *Movable Racks.* Racks on fixed rails or guides.

3.3.195.3 *Multiple-Row Racks.* Racks greater than 12 ft (3.7 m) wide or single- or double-row racks separated by aisles less than 3.5 ft (1.1 m) wide having an overall width greater than 12 ft (3.7 m). [**13,** 2002]

3.3.195.4* *Portable Racks.* Racks that are not fixed in place.

3.3.195.5 *Single-Row Racks.* Racks that have no longitudinal flue space and that have a width up to 6 ft (1.8 m) with aisles at least 3.5 ft (1.1 m) from other storage. [**13,** 2002]

3.3.196* Ramp. A walking surface that has a slope steeper than 1 in 20. [*101,* 2006]

3.3.197 Recreational Fire. The noncommercial burning of materials other than rubbish for pleasure, religious, ceremonial, cooking, or similar purposes in which the fuel burned is not contained in an incinerator, a barbecue grill, or a barbecue pit, and the total fuel area is not exceeding 3 ft (0.9 m) in diameter and 2 ft (0.6 m) in height.

3.3.198 Refinery. A plant in which flammable or combustible liquids are produced on a commercial scale from crude petroleum, natural gasoline, or other hydrocarbon sources. [**30,** 2003]

3.3.199 Relocatable Power Tap. A device for indoor use consisting of an attachment plug on one end of a flexible cord and two or more receptacles on the opposite end, and has overcurrent protection.

3.3.200 Room.

3.3.200.1 ***Cutoff Room.*** A room within a building and having at least one exterior wall. [**30,** 2003]

3.3.200.2* ***Gas Room.*** A separately ventilated, fully enclosed room in which only compressed gases, cryogenic fluids, associated equipment and supplies are stored or used. [**55,** 2005]

3.3.200.3 ***Inside Room.*** A room totally enclosed within a building and having no exterior walls. [**30,** 2003]

3.3.201 Row. A minimum yard storage unit comprised of adjoining cotton bales.

3.3.202 Safety Can. A listed container, of not more than 5.3 gal (20 L) capacity, having a spring-closing lid and spout cover and so designed that it will safely relieve internal pressure when subjected to fire exposure. [**30,** 2003]

3.3.203 Sales Display Area. See 3.3.13.9.

3.3.204 Salvage Vehicle. A vehicle that is dismantled for parts or awaiting destruction.

3.3.205 Self-Closing. Equipped with an approved device that ensures closing after opening. [***101,*** 2006]

3.3.206 Separation of Hazards. Physically separated by a specified distance, construction, or appliance. [**55,** 2005]

3.3.207 Shop Drawings. Scaled working drawings, equipment cutsheets, and design calculations. *(See 3.3.12, Plan, in NFPA 1031.)* [**1031,** 2003]

3.3.208 Signal.

3.3.208.1 ***Alarm Signal.*** A signal indicating an emergency that requires immediate action, such as a signal indicative of fire. [*72,* 2002]

3.3.208.2 ***Fire Alarm Signal.*** A signal initiated by a fire alarm-initiating device such as a manual fire alarm box, automatic fire detector, waterflow switch, or other device in which activation is indicative of the presence of a fire or fire signature. [*72,* 2002]

3.3.208.3 ***Supervisory Signal.*** A signal indicating the need for action in connection with the supervision of guard tours, the fire suppressions or equipment, or the maintenance features of related systems. [*72,* 2002]

3.3.208.4 ***Trouble Signal.*** A signal initiated by the fire alarm system or device indicative of a fault in a monitored circuit or component. [*72,* 2002]

3.3.209 Simple Asphyxiant Gas. See 3.3.122.16.

3.3.210 Smoke Alarm. A single or multiple station alarm responsive to smoke. [*72,* 2002]

3.3.211* Smoke Barrier. A continuous membrane, or a membrane with discontinuities created by protected openings, where such membrane is designed and constructed to restrict the movement of smoke. [***5000,*** 2006]

3.3.212 Smoke Compartment. See 3.3.58.2.

3.3.213* Smoke Partition. A continuous membrane that is designed to form a barrier to limit the transfer of smoke. [***101,*** 2006]

3.3.214 Smoking. The use or carrying of a lighted pipe, cigar, cigarette, tobacco, or any other type of smoking substance.

3.3.215 Smoking Area. See 3.3.13.10.

3.3.216 Solid.

3.3.216.1* ***Combustible Particulate Solid.*** Any combustible solid material comprised of distinct particles or pieces, regardless of size, shape, or chemical composition, that is capable of being pneumatically conveyed. [**69,** 2002]

3.3.216.2* ***Flammable Solid.*** A solid substance, other than a substance defined as a blasting agent or explosive, that is liable to cause fire resulting from friction or retained heat from manufacture, that has an ignition temperature below 212°F (100°C), or which burns so vigorously or persistently when ignited that it creates a serious hazard.

3.3.217 Solid Shelving. Solid, slatted, and other types of shelving located within racks that obstruct sprinkler water penetration down through the racks.

3.3.218 Special Use. See 3.3.244.3.

3.3.219 Spray Area. See 3.3.13.11.

3.3.220* Spray Booth. A power-ventilated enclosure for a spray application operation or process that confines and limits the escape of the material being sprayed, including vapors, mists, dusts, and residues that are produced by the spraying operation and conducts or directs these materials to an exhaust system. [**33,** 2003]

3.3.221* Spray Room. A power-ventilated fully enclosed room used exclusively for open spraying of flammable or combustible materials. [**33,** 2003]

3.3.222 Standard Cubic Foot of Gas. Cubic foot of gas at 14.7 psia (101 kPa) and 70°F (21°C). [**55,** 2005]

3.3.223 Standard Temperature and Pressure (STP). A temperature of 70°F (21°C) and a pressure of 1 atmosphere (14.7 psi or 760 mm Hg).

3.3.224 Standpipe System. See 3.3.233.11.

3.3.225 Storage.

3.3.225.1 ***Banded Tire Storage.*** Storage in which a number of tires are strapped together.

3.3.225.2 ***Cartoned Storage.*** Storage consisting of corrugated cardboard or paperboard containers that fully enclose the commodity.

3.3.225.3 ***Detached Storage.*** Storage in a separate building or in an outside area located away from all structures.

3.3.225.4 ***High-Piled Storage.*** Solid-piled, palletized, rack storage, bin box, and shelf storage in excess of 12 ft (3.7 m) in height. [**13,** 2002]

3.3.225.5 ***Isolated Storage.*** Storage in a different storage room or in a separate and detached building located at a safe distance.

3.3.225.6* ***Laced Tire Storage.*** Tires stored where the sides of the tires overlap, creating a woven or laced appearance. [**13,** 2002]

3.3.225.7* ***Miscellaneous Tire Storage.*** The storage of rubber tires that is incidental to the main use of the building. Storage areas shall not exceed 2000 ft^2 (186 m^2). On-tread storage piles, regardless of storage method, shall not exceed 25 ft (7.6 m) in the direction of the wheel holes. Acceptable storage arrangements include (a) on-floor, on-side storage up to 12 ft (3.7 m) high; (b) on-floor, on-tread storage up to 5 ft (1.5 m) high; (c) double-row or multirow

fixed or portable rack storage on-side or on-tread up to 5 ft (1.5 m) high; (d) single-row fixed or portable rack storage on-side or on-tread up to 12 ft (3.7 m) high; and (e) laced tires in racks up to 5 ft (1.5 m) in height. [**13,** 2002]

3.3.225.8 ***On-Side Tire Storage.*** Tires stored horizontally or flat. [**13,** 2002]

3.3.225.9 ***On-Tread Tire Storage.*** Tires stored vertically or on their treads. [**13,** 2002]

3.3.225.10 ***Palletized Storage.*** Storage of commodities on pallets or other storage aids that form horizontal spaces between tiers of storage. [**13,** 2002]

3.3.225.11 ***Segregated Storage.*** Storage located in the same room or inside area that is physically separated by distance from incompatible materials.

3.3.225.12 ***Yard Storage.*** Storage of commodities in outdoor areas.

3.3.226 Storage Aids. Commodity storage devices, such as pallets, dunnage, separators, and skids. [**13,** 2002]

3.3.227* Store. As used in Chapter 65, a building classified as a mercantile occupancy that contains a variety of merchandise and that is not used primarily for the retail sales of consumer fireworks. [**1124,** 2006]

3.3.228 Story. The portion of a building located between the upper surface of a floor and the upper surface of the floor or roof next above. [***5000,*** 2006]

3.3.228.1* ***Occupiable Story.*** A story occupied by people on a regular basis. [***101,*** 2006]

3.3.229 Street. A public thoroughfare that has been dedicated for vehicular use by the public and can be used for access by fire department vehicles. [***101,*** 2006]

3.3.230* Street Floor. A story or floor level accessible from the street or from outside the building at ground level, with the floor level at the main entrance located not more than three risers above or below ground level, and arranged and utilized to qualify as the main floor. [**101B,** 2002]

3.3.231* Structure. That which is built or constructed. [***101,*** 2006]

3.3.232 Summarily Abate. To immediately judge a condition to be a fire hazard to life or property and to order immediate correction of such condition.

3.3.233 System. Several items of equipment assembled, grouped, or otherwise interconnected for the accomplishment of a purpose or function.

3.3.233.1 ***Automatic Fire Extinguishing System.*** Any system that is designed and installed to detect a fire and subsequently discharge an extinguishing agent without human activation or direction. [**1141,** 2003]

3.3.233.2 ***Bulk Oxygen System.*** An assembly of equipment, such as oxygen storage containers, pressure regulators, pressure relief devices, vaporizers, manifolds, and interconnecting piping, with a storage capacity of more than 20,000 ft^3 (scf) (566 m^3) of oxygen including unconnected reserves on hand at the site. The bulk oxygen system terminates at the point where oxygen at service pressure first enters the supply line. The oxygen containers are either stationary or movable, and the oxygen is stored as a compressed gas or cryogenic fluid. [**55,** 2005]

3.3.233.3 ***Central Station Fire Alarm System.*** A system or group of systems in which the operations of circuits and devices are transmitted automatically to, recorded in, maintained by, and supervised from a listed central station that has competent and experienced servers and operators who, upon receipt of a signal, take such action as required by *NFPA 72.* Such service is to be controlled and operated by a person, firm, or corporation whose business is the furnishing, maintaining, or monitoring of supervised fire alarm systems. [***72,*** 2002]

3.3.233.4 ***Compressed Gas System.*** An assembly of equipment designed to contain, distribute, or transport compressed gases. [**318,** 2006]

3.3.233.5 ***Continuous Gas Detection System.*** A gas detection system in which the instrument is maintained in continuous operation and the interval between sampling of any point does not exceed 30 minutes. [**55,** 2005]

3.3.233.6 ***Cylinder Containment System.*** A gastight recovery system comprised of equipment or devices that can be placed over a leak in a compressed gas container, thereby stopping or controlling the escape of gas from the leaking container. [**55,** 2005]

3.3.233.7 ***Dedicated Smoke-Control System.*** A system that is intended for the purpose of smoke control only, which are separate systems of air moving and distribution equipment that do not function under normal building operating conditions.

3.3.233.8 ***Fire Alarm System.*** A system or portion of a combination system that consists of components and circuits arranged to monitor and annunciate the status of fire alarm or supervisory signal-initiating devices and to initiate the appropriate response to those signals. [***72,*** 2002]

3.3.233.9 ***Fire Protection System.*** Any fire alarm device or system or fire extinguishing device or system, or their combination, that is designed and installed for detecting, controlling, or extinguishing a fire or otherwise alerting occupants, or the fire department, or both, that a fire has occurred. [**1141,** 2003]

3.3.233.10 ***Nondedicated Smoke-Control System.*** A smoke-control system that shares components with some other system(s), such as the building HVAC system, which changes its mode of operation to achieve the smoke-control objective.

3.3.233.11 ***Standpipe System.*** An arrangement of piping, valves, hose connections, and allied equipment installed in a building or structure, with the hose connections located in such a manner that water can be discharged in streams or spray patterns through attached hose and nozzles, for the purpose of extinguishing a fire, thereby protecting a building or structure and its contents in addition to protecting the occupants. This is accomplished by means of connections to water supply systems or by means of pumps, tanks, and other equipment necessary to provide an adequate supply of water to the hose connections. [**14,** 2003]

3.3.233.12 ***Treatment System.*** An assembly of equipment capable of processing a hazardous gas and reducing the gas concentration to a predetermined level at the point of discharge from the system to the atmosphere. [**55,** 2005]

3.3.233.13* ***Vapor Processing System.*** A system designed to capture and process vapors displaced during transfer or

filling operations by use of mechanical or chemical means. [**30,** 2003]

3.3.233.14* ***Vapor Recovery System.*** A system designed to capture and retain, without processing, vapors displaced during transfer or filling operations. [**30,** 2003]

3.3.234 Tactics. The method of securing the objectives laid out in the strategy through the use of personnel and equipment to achieve optimum results.

3.3.235 Tank.

3.3.235.1 ***Aboveground Storage Tank.*** A horizontal or vertical tank that is listed and intended for fixed installation, without backfill, above or below grade and is used within the scope of its approval or listing. [**30A,** 2003]

3.3.235.2 ***Aboveground Tank.*** A tank that is installed above grade, at grade, or below grade without backfill. [**30,** 2003]

3.3.235.2.1 ***Protected Aboveground Tank.*** An aboveground storage tank that is listed in accordance with UL 2085, *Standard for Protected Aboveground Tanks for Flammable and Combustible Liquids,* or an equivalent test procedure that consists of a primary tank provided with protection from physical damage and fire-resistive protection from exposure to a high-intensity liquid pool fire. [**30,** 2003]

3.3.235.3 ***ASME Tank.*** See 3.3.65.1, ASME Container.

3.3.235.4 ***Portable Tank.*** Any closed vessel having a liquid capacity over 60 gal (230 L) and not intended for fixed installation. This includes intermediate bulk containers (IBCs) as defined and regulated by the U.S. Department of Transportation. [**30,** 2003]

3.3.235.5 ***Secondary Containment Tank.*** A tank that has an inner and outer wall with an interstitial space (annulus) between the walls and that has a means for monitoring the interstitial space for a leak. [**30,** 2003]

3.3.235.6* ***Stationary Tank.*** A packaging designed primarily for stationary installations not intended for loading, unloading, or attachment to a transport vehicle as part of its normal operation in the process of use. [**55,** 2005]

3.3.235.7 ***Storage Tank.*** Any vessel having a liquid capacity that exceeds 60 gal (230 L), is intended for fixed installation, and is not used for processing. [**30,** 2003]

3.3.236 Temporary Wiring. Approved wiring for power and lighting during a period of construction, remodeling, maintenance, repair, or demolition, and decorative lighting, carnival power and lighting, and similar purposes.

3.3.237 Tire.

3.3.237.1 ***Rubber Tires.*** Pneumatic tires for passenger automobiles, aircraft, light and heavy trucks, trailers, farm equipment, construction equipment (off-the-road), and buses. [**13,** 2002]

3.3.237.2 ***Scrap Tire.*** A tire that can no longer be used for its original purpose due to wear or damage.

3.3.238 Toxic Material. See 3.3.156.11.

3.3.239 Unauthorized Discharge. A release or emission of materials in a manner that does not conform to the provisions of this *Code* or applicable public health and safety regulations.

3.3.240 Unit Operation or Unit Process. A segment of a physical or chemical process that might or might not be integrated with other segments to constitute the manufacturing sequence. [**30,** 2003]

3.3.241 Unit Process. See 3.3.240, Unit Operation or Unit Process.

3.3.242 Unit (Vessel), Operating or Process. See 3.3.168.

3.3.243 Unstable (Reactive) Material. See 3.3.156.12.

3.3.244 Use.

3.3.244.1* ***Closed System Use (Material).*** A solid or liquid hazardous material in a closed vessel or system that remains closed during normal operations where vapors emitted by the product are not liberated outside of the vessel or system and the product is not exposed to the atmosphere during normal operations, and all uses of compressed gases. [***5000,*** 2006]

3.3.244.2* ***Open System Use (Material).*** Use of a solid or liquid hazardous material in a vessel or system that is continuously open to the atmosphere during normal operations and where vapors are liberated, or the product is exposed to the atmosphere during normal operations. [***5000,*** 2006]

3.3.244.3 ***Special Use.*** A use that includes, but is not limited to, events or occurrences during which life safety–threatening situations or fire hazards exist or are likely to exist as determined by the AHJ.

3.3.245 Valve.

3.3.245.1 ***Indicating Valve.*** A valve that has components that show if the valve is open or closed. Examples are outside screw and yoke (OS&Y) gate valves and underground gate valves with indicator posts.

3.3.245.2 ***Reduced Flow Valve.*** A valve equipped with a restricted flow orifice that is designed to reduce the maximum flow from the valve under full flow conditions.

3.3.245.3 ***Valve Outlet Cap or Plug.*** A removable device that forms a gastight seal on the outlet to the control valve that is provided on a source containing a compressed gas or cryogenic fluid. [**55,** 2005]

3.3.245.4 ***Valve Protection Cap.*** A rigid, removable cover provided for container valve protection during handling, transportation, and storage. [**55,** 2005]

3.3.245.5 ***Valve Protection Device.*** A device attached to the neck ring or body of a cylinder for the purpose of protecting the cylinder valve from being struck or from being damaged by the impact resulting from a fall or an object striking the cylinder.

3.3.246* Vapor Pressure. The pressure, measured in pounds per square inch, absolute (psia), exerted by a liquid, as determined by ASTM D 323, *Standard Method of Test for Vapor Pressure of Petroleum Products (Reid Method).* [**30,** 2003]

3.3.247 Vapor Processing System. See 3.3.233.13.

3.3.248 Vapor Recovery System. See 3.3.233.14.

3.3.249 Warehouses.

3.3.249.1 ***General-Purpose Warehouse.*** A separate, detached building or portion of a building used only for warehousing-type operations. [**30,** 2003]

3.3.249.2 ***Liquid Warehouse.*** A separate, detached building or attached building used for warehousing-type operations for liquids. [**30,** 2003]

3.3.250 Water Capacity. The amount of water at 60°F (16°C) required to fill a container. [**58,** 2004]

3.3.251* Wharf. A structure at the shoreline that has a platform built along and parallel to a body of water with either an open deck or a superstructure. [**307,** 2006]

3.3.252 Wildland/Urban Interface. An area where improved property and wildland fuels meet at a well-defined boundary. [**1144,** 2002]

3.3.253 Wood Panel. Board or sheet made from veneers, particles, or fibers of wood and includes plywood, oriented strandboard, and similar wood products.

3.3.254 Written Notice. A notification in writing delivered in person to the individual or parties intended, or delivered at, or sent by certified or registered mail to, the last residential or business address of legal record.

3.4 Special Performance-Based Definitions.

3.4.1 Alternative Calculation Procedure. A calculation procedure that differs from the procedure originally employed by the design team but that provides predictions for the same variables of interest. [***101,*** 2006]

3.4.2 Analysis.

3.4.2.1 *Sensitivity Analysis.* An analysis performed to determine the degree to which a predicted output will vary given a specified change in an input parameter, usually in relation to models. [***5000,*** 2006]

3.4.2.2 *Uncertainty Analysis.* An analysis performed to determine the degree to which a predicted value will vary. [***5000,*** 2006]

3.4.3 Data Conversion. The process of developing the input data set for the assessment method of choice. [***101,*** 2006]

3.4.4 Design Fire Scenario. See 3.4.9.1.

3.4.5* Design Specification. A building characteristic and other conditions that are under the control of the design team. [***5000,*** 2006]

3.4.6 Design Team. A group of stakeholders including, but not limited to, representatives of the architect, client, and any pertinent engineers and other designers. [***101,*** 2006]

3.4.7* Exposure Fire. A fire that starts at a location that is remote from the area being protected and grows to expose that which is being protected. [***101,*** 2006]

3.4.8* Fire Model. A structured approach to predicting one or more effects of a fire. [***101,*** 2006]

3.4.9* Fire Scenario. A set of conditions that defines the development of fire, the spread of combustion products throughout a building or portion of a building, the reactions of people to fire, and the effects of combustion products. [***101,*** 2006]

3.4.9.1 *Design Fire Scenario.* A fire scenario selected for evaluation of a proposed design. [**914,** 2001]

3.4.10* Fuel Load. The total quantity of combustible contents of a building, space, or fire area. [***5000,*** 2006]

3.4.11 Incapacitation. A condition under which humans do not function adequately and become unable to escape untenable conditions. [***101,*** 2006]

3.4.12 Input Data Specification. Information required by the verification method. [***101,*** 2006]

3.4.13 Occupant Characteristics. The abilities or behaviors of people before and during a fire. [***101,*** 2006]

3.4.14* Performance Criteria. Threshold values on measurement scales that are based on quantified performance objectives. [***101,*** 2006]

3.4.15* Proposed Design. A design developed by a design team and submitted to the authority having jurisdiction for approval. [***101,*** 2006]

3.4.16 Safe Location. A location remote or separated from the effects of a fire so that such effects no longer pose a threat. [***101,*** 2006]

3.4.17 Safety Factor. A factor applied to a predicted value to ensure that a sufficient safety margin is maintained. [***101,*** 2006]

3.4.18 Safety Margin. The difference between a predicted value and the actual value where a fault condition is expected. [***101,*** 2006]

3.4.19 Sensitivity Analysis. See 3.4.2.1.

3.4.20 Stakeholder. An individual, or representative of same, having an interest in the successful completion of a project. [***101,*** 2006]

3.4.21 Uncertainty Analysis. See 3.4.2.2.

3.4.22 Verification Method. A procedure or process used to demonstrate or confirm that the proposed design meets the specified criteria. [***101,*** 2006]

Chapter 4 General Requirements

4.1* Goals and Objectives.

4.1.1* Goals. The goals of this *Code* shall be to provide a reasonable level of safety, property protection, and public welfare from the hazards created by fire, explosion, and other hazardous conditions.

4.1.2* Objectives. To achieve the goals stated in 4.1.1, the goals and objectives of 4.1.3 through 4.1.5 shall be used to determine the intent of this *Code.*

4.1.3* Safety. This *Code* shall provide for life safety by reducing the probability of injury or death from fire, explosions, or events involving hazardous materials.

4.1.3.1 Safety from Fire.

4.1.3.1.1* Safety-from-Fire Goals. The fire safety goals of this *Code* shall be as follows:

(1) To provide an environment for the occupants in a building or facility and for the public near a building or facility that is reasonably safe from fire and similar emergencies
(2) To protect fire fighters and emergency responders

4.1.3.1.2 Safety-from-Fire Objectives.

4.1.3.1.2.1 Buildings and facilities shall be designed, constructed, and maintained to protect occupants who are not intimate with the initial fire development for the amount of time needed to evacuate, relocate, or defend in place.

4.1.3.1.2.2* Buildings shall be designed and constructed to provide reasonable safety for fire fighters and emergency responders during search and rescue operations.

4.1.3.1.2.3 Buildings shall be designed, located, and constructed to reasonably protect adjacent persons from injury or death as a result of a fire.

4.1.3.1.2.4 Buildings shall be designed, located, and constructed to provide reasonable access to the building for emergency responders.

4.1.3.1.2.5* Operations shall be conducted at facilities in a safe manner that minimizes, reduces, controls, or mitigates the risk of fire injury or death for the operators, while protecting the occupants not intimate with initial fire development for the amount of time needed to evacuate, relocate, or defend in place.

4.1.3.2 Safety During Building Use.

4.1.3.2.1* Safety-During-Building-Use Goal. The safety-during-building-use goal of this *Code* shall be to provide an environment for the occupants of the building that is reasonably safe during the normal use of the building.

4.1.3.2.2 Safety-During-Building-Use Objectives.

4.1.3.2.2.1 Buildings shall be designed and constructed to reduce the probability of death or injury of persons from falling during normal use of the building.

4.1.3.2.2.2 Buildings shall be designed and constructed to provide for reasonably safe crowd movement during emergency and nonemergency conditions.

4.1.3.2.2.3 Buildings shall be designed and constructed to provide reasonable life safety for occupants and workers during construction and demolition.

4.1.3.2.2.4 Buildings shall be designed and constructed to provide reasonable notification to occupants of fire and other emergency situations.

4.1.3.2.2.5 Buildings shall be designed and constructed to provide reasonable signage and lighting to identify hazards, exits, means of egress, and other building safety features.

4.1.3.3 Safety from Hazardous Materials.

4.1.3.3.1 Safety-from-Hazardous-Materials Goal. The safety-from-hazardous-materials goal of this *Code* shall be to provide an environment for the occupants in a building or facility and to those adjacent to a building or facility that is reasonably safe from exposures to adverse affects from hazardous materials present therein.

4.1.3.3.2 Safety-from-Hazardous-Materials Objectives.

4.1.3.3.2.1 The storage, use, or handling of hazardous materials in a building or facility shall be accomplished in a manner that provides a reasonable level of safety for occupants and for those adjacent to a building or facility from health hazards, illness, injury, or death during normal storage, use, or handling operations and conditions.

4.1.3.3.2.2* The storage, use, or handling of hazardous materials in a building or facility shall be accomplished in a manner that provides a reasonable level of safety for occupants and for those adjacent to a building or facility from illness, injury, or death due to the following conditions:

(1) An unplanned release of the hazardous material
(2) A fire impinging upon the hazardous material or the involvement of the material in a fire
(3) The application of an external force on the hazardous material that is likely to result in an unsafe condition

4.1.4 Property Protection.

4.1.4.1 Property Protection Goal. The property protection goal of this *Code* shall be to limit damage created by a fire, explosion, or event associated with hazardous materials to a reasonable level to the building or facility and adjacent property.

4.1.4.2 Property Protection Objectives.

4.1.4.2.1* Prevention of Ignition. The facility shall be designed, constructed, and maintained, and operations associated with the facility shall be conducted, to prevent unintentional explosions and fires that result in failure of or damage to adjacent compartments, emergency life safety systems, adjacent properties, adjacent outside storage, and the facility's structural elements.

4.1.4.2.2* Fire Spread and Explosions. In the event that a fire or explosion occurs, the building or facility shall be sited, designed, constructed, or maintained, and operations associated with the facility shall be conducted and protected, to reasonably reduce the impact of unwanted fires and explosions on the adjacent compartments, emergency life safety systems, adjacent properties, adjacent outside storage, and the facility's structural elements.

4.1.4.2.3 Structural Integrity. The facility shall be designed, constructed, protected, and maintained, and operations associated with the facility shall be conducted, to provide a reasonable level of protection for the facility, its contents, and adjacent properties from building collapse due to a loss of structural integrity resulting from a fire.

4.1.4.2.4 Hazardous Materials. The facility shall be designed, constructed, and maintained, and operations associated with the facility shall be conducted, to provide reasonable property protection from damage resulting from fires, explosions, and other unsafe conditions associated with the storage, use, and handling of hazardous materials therein.

4.1.5 Public Welfare.

4.1.5.1* Public Welfare Goal. The public welfare goal of this *Code* shall be to maintain a high probability that buildings and facilities that provide a public welfare role for a community continue to perform the function for their intended purpose following a fire, explosion, or hazardous materials event.

4.1.5.2* Public Welfare Objective. Buildings and facilities that provide a public welfare role for a community shall be designed, constructed, maintained, and operated to provide reasonable assurance of continued function following a fire, explosion, or hazardous materials event.

4.2 Assumptions.

4.2.1* Single Fire Source.

4.2.1.1 The fire protection methods of this *Code* shall assume that multiple simultaneous fire incidents will not occur.

4.2.1.2 The single fire source assumption shall not preclude the evaluation of multiple design fire scenarios as required by Section 5.4.

4.2.2* Single Hazardous Material Release.

4.2.2.1 The protection methods of this *Code* shall assume that multiple simultaneous unauthorized releases of hazardous materials from different locations will not occur.

4.2.2.2 The single hazardous material release assumption shall not preclude the evaluation of multiple design scenarios as required by Section 5.4.

4.2.3* Incidents Impinging on Hazardous Materials. The protection methods of this *Code* shall assume that a fire, explosion, hazardous materials release, or external force that creates a dangerous condition has the potential to impinge on hazardous materials being stored, handled, or used in the building or facility under normal conditions. *(See Section 5.4 for performance-based design scenarios.)*

4.3 Compliance Options. Compliance with the goals and objectives of Section 4.1 shall be provided in accordance with either of the following:

(1) The prescriptive-based provisions per 4.3.1
(2) The performance-based provisions per 4.3.2

4.3.1 Prescriptive-Based Option.

4.3.1.1 A prescriptive-based option shall be in accordance with Chapter 1 through Chapter 4 and Chapter 10 through Chapter 73 of this *Code*.

4.3.1.2 Where specific requirements contained in Chapter 20 for occupancies differ from general requirements contained in Chapter 1 through Chapter 4 and Chapter 10 through Chapter 73, the requirements of Chapter 20 shall govern.

4.3.2 Performance-Based Option.

4.3.2.1 A performance-based option shall be in accordance with Chapter 1 through Chapter 5 of this *Code*.

4.3.2.2 Prescriptive requirements shall be permitted to be used as part of the performance approach, if they, in conjunction with the performance features, meet the overall goals and objectives of this *Code*.

4.4 Fundamental Requirements.

4.4.1 Multiple Safeguards.

4.4.1.1 The design of every building or structure intended for human occupancy shall be such that reliance for property protection and safety to life does not depend solely on any single safeguard.

4.4.1.2 Additional safeguard(s) shall be provided for property protection and life safety in the event that any single safeguard is ineffective due to inappropriate human actions, building failure, or system failure.

4.4.2 Appropriateness of Safeguards. Every building or structure shall be provided with means of egress and other safeguards of the kinds, numbers, locations, and capacities appropriate to the individual building or structure, with due regard to the following:

(1) Characteristics of the occupancy
(2) Capabilities of the occupants
(3) Number of persons exposed
(4) Fire protection available
(5) Capabilities of response personnel
(6) Height and type of construction of the building or structure
(7) Other factors necessary to provide occupants with a reasonable degree of safety
(8) Other factors necessary to protect the building and contents from damage

4.4.3 Means of Egress.

4.4.3.1 Unobstructed Egress.

4.4.3.1.1 In every occupied building or structure, means of egress from all parts of the building shall be maintained free and unobstructed.

4.4.3.1.2 No lock or fastening shall be permitted that prevents free escape from the inside of any building other than in health care occupancies and detention and correctional occupancies where staff are continually on duty and effective provisions are made to remove occupants in case of fire or other emergency.

4.4.3.1.3 Means of egress shall be accessible to the extent necessary to ensure reasonable safety for occupants having impaired mobility.

4.4.3.2 Awareness of Egress System.

4.4.3.2.1 Every exit shall be clearly visible, or the route to reach every exit shall be conspicuously indicated.

4.4.3.2.2 Each means of egress, in its entirety, shall be arranged or marked so that the way to a place of safety is indicated in a clear manner.

4.4.3.2.3 Lighting. Illumination of means of egress shall be provided. [*See 5.3.4(10).*]

4.4.4* Occupant Notification. In every building or structure of such size, arrangement, or occupancy that a fire itself could not provide adequate occupant warning, fire alarm systems shall be provided where necessary to warn occupants of the existence of fire.

4.4.5 Vertical Openings. Every vertical opening between the floors of a building shall be suitably enclosed or protected, as necessary, to provide the following:

(1) Reasonable safety to occupants while using the means of egress by preventing spread of fire, smoke, or fumes through vertical openings from floor to floor to allow occupants to complete their use of the means of egress
(2) Limitation of damage to the buildings and its contents

4.4.6 System Design/Installation. Any fire protection system, building service equipment, feature of protection, or safeguard provided to achieve the goals of this *Code* shall be designed, installed, and approved in accordance with applicable codes and standards referenced in Chapter 2.

4.5 General Requirements.

4.5.1 Authority Having Jurisdiction (AHJ).

4.5.1.1 The AHJ shall determine whether the provisions of this *Code* are met.

4.5.1.2 Where it is evident that a reasonable degree of safety is provided, any requirement shall be permitted to be modified if its application would be hazardous under normal occupancy conditions in the judgment of the AHJ.

4.5.2 Historic Structures and Cultural Resource Buildings. The provisions of this *Code* shall be permitted to be modified by the AHJ for buildings or structures identified and classified as historic structures in accordance with Section 20.17.

4.5.3 Provisions in Excess of *Code* Requirements. Nothing in this *Code* shall be construed to prohibit a better type of building construction, an additional means of egress, or an otherwise safer condition than that specified by the minimum requirements of this *Code.*

4.5.4 Conditions for Occupancy. No new construction or existing building shall be occupied in whole or in part in violation of the provisions of this *Code* unless the following conditions exist:

(1) A plan of correction has been approved.
(2) The occupancy classification remains the same.
(3) No serious life safety hazard exists as judged by the AHJ.

4.5.5 Warrant of Fitness.

4.5.5.1 Where compliance with this *Code* is effected by means of a performance-based design, the owner shall annually certify compliance with the conditions and limitations of the design by submitting a warrant of fitness acceptable to the AHJ.

4.5.5.2 The warrant of fitness shall attest that the building features, systems, and use have been inspected and confirmed to remain consistent with design specifications outlined in the documentation required by 5.1.8 and 5.7.3 and that they continue to satisfy the goals and objectives specified in Section 4.1. *(See 5.1.11.)*

4.5.6 Construction, Repair, and Improvement Operations.

4.5.6.1 Buildings or portions of buildings shall be permitted to be occupied during construction, repair, alterations, or additions only where required means of egress and required fire protection features are in place and continuously maintained for the portion occupied or where alternative life safety measures and building protection measures acceptable to the AHJ are in place.

4.5.6.2 Escape Facilities.

4.5.6.2.1 In buildings under construction, adequate escape facilities shall be maintained at all times for the use of construction workers.

4.5.6.2.2 Escape facilities shall consist of doors, walkways, stairs, ramps, fire escapes, ladders, or other approved means or devices arranged in accordance with the general principles of the *Code* insofar as they can reasonably be applied to buildings under construction.

4.5.6.3 Flammable, hazardous, or explosive substances or equipment for repairs or alterations shall be permitted in a building while the building is occupied if the condition of use and safeguards provided do not create any additional danger or impediment to egress beyond the normally permissible conditions in the building and is such that materials are safeguarded when the building is unoccupied.

4.5.7* Changes of Occupancy.

4.5.7.1 In any building or structure, whether or not a physical alteration is needed, a change from one occupancy classification to another shall be permitted only where such a structure, building, or portion thereof conforms with the requirements of this *Code* that apply to new construction for the proposed new use, except as follows:

(1) Where, in the opinion of the AHJ, the proposed occupancy or change in use is not more hazardous than the existing use, based on life safety and fire risk, the AHJ shall be permitted to approve such change of occupancy provided compliance with the requirements of this *Code* for buildings of like occupancy or use are specifically incorporated to safeguard the life, health, and welfare of persons.
(2) Change of tenants or ownership shall not be construed to be a change of occupancy classification where the nature of use and assigned occupancy classification remain the same.

4.5.7.2 Where specifically permitted elsewhere in the *Code,* existing construction features shall be permitted to be continued in use in conversions.

4.5.8 Maintenance, Inspection, and Testing.

4.5.8.1 Whenever or wherever any device, equipment, system, condition, arrangement, level of protection, fire-resistive construction, or any other feature is required for compliance with the provisions of this *Code,* such device, equipment, system, condition, arrangement, level of protection, fire-resistive construction, or other feature shall thereafter be continuously maintained in accordance with applicable NFPA requirements or requirements developed as part of a performance-based design, or as directed by the AHJ. [***101:***4.6.12.1]

4.5.8.2 No existing life safety feature shall be removed or reduced where such feature is a requirement for new construction. [***101:***4.6.12.2]

4.5.8.3* Existing life safety features obvious to the public, if not required by the *Code,* shall be either maintained or removed. [***101:***4.6.12.3]

4.5.8.4 Any device, equipment, system, condition, arrangement, level of protection, fire-resistive construction, or any other feature requiring periodic testing, inspection, or operation to ensure its maintenance shall be tested, inspected, or operated as specified elsewhere in this *Code* or as directed by the AHJ. [***101:***4.6.12.4]

4.5.8.5 Maintenance, inspection, and testing shall be performed under the supervision of a responsible person who shall ensure that testing, inspection, and maintenance are made at specified intervals in accordance with applicable NFPA standards or as directed by the AHJ. [***101:***4.6.12.5]

Chapter 5 Performance-Based Option

5.1* General.

5.1.1 Application. The requirements of this chapter shall apply to facilities designed to the performance-based option permitted by Section 4.3.

5.1.2 Goals and Objectives. The performance-based design shall meet the goals and objectives of this *Code* in accordance with Section 4.1 and Section 4.2.

5.1.3* Approved Qualifications. The performance-based design shall be prepared by a person with qualifications acceptable to the AHJ.

5.1.4* Plan Submittal Documentation. When a performance-based design is submitted to the AHJ for review and approval, the owner shall document, in an approved format, each performance objective and applicable scenario, including any calculation methods or models used in establishing the proposed design's fire and life safety performance.

5.1.5* Independent Review. The AHJ shall be permitted to require an approved, independent third party to review the proposed design and provide an evaluation of the design to the AHJ at the expense of the owner.

5.1.6 Sources of Data. Data sources shall be identified and documented for each input data requirement that is required to be met using a source other than a required design scenario, an assumption, or a facility design specification.

5.1.6.1 The degree of conservatism reflected in such data shall be specified, and a justification for the source shall be provided.

5.1.6.2 Copies of all references relied upon by the performance-based design to support assumptions, design features, or any other part of the design shall be made available to the AHJ if requested.

5.1.7 Final Determination. The AHJ shall make the final determination as to whether the performance objectives have been met.

5.1.8* Operations and Maintenance Manual. An approved Operations and Maintenance (O&M) Manual shall be provided by the owner to the AHJ and the fire department and shall be maintained at the facility in an approved location.

5.1.9* Information Transfer to the Fire Service. Where a performance-based design is approved and used, the designer shall ensure that information regarding the operating procedures of the performance-based designed fire protection system is transferred to the owner and to the local fire service for inclusion in the pre-fire plan.

5.1.10* Design Feature Maintenance.

5.1.10.1 The design features required for the facility to meet the performance goals and objectives shall be maintained by the owner and be readily accessible to the AHJ for the life of the facility.

5.1.10.2 The facility shall be maintained in accordance with all documented assumptions and design specifications.

5.1.10.2.1 Any proposed changes or variations from the approved design shall be approved by the AHJ prior to the actual change.

5.1.10.2.2 Any approved changes to the original design shall be maintained in the same manner as the original design.

5.1.11* Annual Certification. Where a performance-based design is approved and used, the property owner shall annually certify that the design features and systems have been maintained in accordance with the approved original performance-based design and assumptions and any subsequent approved changes or modifications to the original performance-based design.

5.1.12 Hazardous Materials.

5.1.12.1 Performance-based designs for facilities containing high hazard contents shall identify the properties of hazardous materials to be stored, used, or handled and shall provide adequate and reliable safeguards to accomplish the following objectives, considering both normal operations and possible abnormal conditions:

(1) Minimize the potential occurrence of unwanted releases, fire, or other emergency incidents resulting from the storage, use, or handling of hazardous materials
(2) Minimize the potential failure of buildings, equipment, or processes involving hazardous materials by ensuring that such buildings, equipment, or processes are reliably designed and are suitable for the hazards present
(3) Minimize the potential exposure of people or property to unsafe conditions or events involving an unintended reaction or release of hazardous materials
(4) Minimize the potential for an unintentional reaction that results in a fire, explosion, or other dangerous condition
(5) Provide a means to contain, treat, neutralize, or otherwise handle plausible releases of hazardous materials to minimize the potential for adverse impacts to persons or property outside of the immediate area of a release
(6) Provide appropriate safeguards to minimize the risk of and limit damage and injury that could result from an explosion involving hazardous materials that present explosion hazards
(7) Detect hazardous levels of gases or vapors that are dangerous to health and alert appropriate persons or mitigate the hazard when the physiological warning properties for such gases or vapors are inadequate to warn of danger prior to personal injury
(8) Maintain power to provide for continued operation of safeguards and important systems that are relied upon to prevent or control an emergency condition involving hazardous materials
(9) Maintain ventilation where ventilation is relied upon to minimize the risk of emergency conditions involving hazardous materials
(10) Minimize the potential for exposing combustible hazardous materials to unintended sources of ignition and for exposing any hazardous material to fire or physical damage that can lead to endangerment of people or property

5.1.12.2 A process hazard analysis and off-site consequence analysis shall be conducted when required by the AHJ to ensure that people and property are satisfactorily protected from potentially dangerous conditions involving hazardous materials. The results of such analyses shall be considered when determining active and passive mitigation measures used in accomplishing the objectives of 4.1.3.3.2 and 4.1.4.2.

5.1.12.3 Written procedures for pre-start-up safety reviews, normal and emergency operations, management of change, emergency response, and accident investigation shall be developed prior to beginning operations at a facility designed in accordance with Section 5.1. Such procedures shall be developed with the participation of employees.

5.1.13 Special Definitions. A list of special terms used in this chapter shall be as follows:

(1) Design Fire Scenario. *(See 3.4.9.1.)*
(2) Design Specification. *(See 3.4.5.)*
(3) Design Team. *(See 3.4.6.)*
(4) Exposure Fire. *(See 3.4.7.)*
(5) Fire Model. *(See 3.4.8.)*
(6) Fire Scenario. *(See 3.4.9.)*
(7) Fuel Load. *(See 3.4.10.)*
(8) Input Data Specification. *(See 3.4.12.)*
(9) Occupant Characteristics. *(See 3.4.13.)*
(10) Performance Criteria. *(See 3.4.14.)*

(11) Proposed Design. *(See 3.4.15.)*
(12) Safety Factor. *(See 3.4.17.)*
(13) Safety Margin. *(See 3.4.18.)*
(14) Sensitivity Analysis. *(See 3.4.2.1.)*
(15) Stakeholder. *(See 3.4.20.)*
(16) Uncertainty Analysis. *(See 3.4.2.2.)*
(17) Verification Method. *(See 3.4.22.)*

5.2 Performance Criteria.

5.2.1 General. A design shall meet the objectives specified in Section 4.1 if, for each required design scenario, assumption, and design specification, the performance criteria of 5.2.2 are met.

5.2.2* Specific Performance Criteria.

5.2.2.1* Fire Conditions. No occupant who is not intimate with ignition shall be exposed to instantaneous or cumulative untenable conditions.

5.2.2.2* Explosion Conditions. The facility design shall provide an acceptable level of safety for occupants and for individuals immediately adjacent to the property from the effects of unintentional detonation or deflagration.

5.2.2.3* Hazardous Materials Exposure. The facility design shall provide an acceptable level of safety for occupants and for individuals immediately adjacent to the property from the effects of an unauthorized release of hazardous materials or the unintentional reaction of hazardous materials.

5.2.2.4* Property Protection. The facility design shall limit the effects of all required design scenarios from causing an unacceptable level of property damage.

5.2.2.5* Public Welfare. For facilities that serve a public welfare role as defined in 4.1.5, the facility design shall limit the effects of all required design scenarios from causing an unacceptable interruption of the facility's mission.

5.2.2.6 Occupant Protection from Untenable Conditions. Means shall be provided to evacuate, relocate, or defend in place occupants not intimate with ignition for sufficient time so that they are not exposed to instantaneous or cumulative untenable conditions from smoke, heat, or flames.

5.2.2.7 Emergency Responder Protection. Buildings shall be designed and constructed to reasonably prevent structural failure under fire conditions for sufficient time to enable fire fighters and emergency responders to conduct search and rescue operations.

5.2.2.8 Occupant Protection from Structural Failure. Buildings shall be designed and constructed to reasonably prevent structural failure under fire conditions for sufficient time to protect the occupants.

5.3 Retained Prescriptive Requirements.

5.3.1 Systems and Features. All fire protection systems and features of the building shall comply with applicable NFPA standards for those systems and features.

5.3.2 Electrical Systems. Electrical systems shall comply with applicable NFPA standards for those systems.

5.3.3 General. The design shall comply with the following requirements in addition to the performance criteria of Section 5.2 and the methods of Section 5.4 through Section 5.7:

(1) Fundamental requirements in Section 10.1
(2) Fire drills in Section 10.6
(3) Smoking in Section 10.10
(4) Open outdoor fires, incinerators, and outdoor fireplaces in Section 10.11
(5) Fire department access in Section 18.2.3

Exception: A performance-based design shall be permitted subject to acceptance by the AHJ where local conditions do not permit compliance with Section 18.2.

(6) Access to structures or areas in Section 18.2
(7) Fire protection markings in Section 10.12
(8) Vacant buildings and premises in Section 10.13
(9) Combustible vegetation in Section 10.14
(10) Safeguards during building construction, alteration, and demolition operations in Chapter 16

5.3.4 Means of Egress. The design shall comply with the following NFPA *101, Life Safety Code*, requirements in addition to the performance criteria of Section 5.2 and the methods of Section 5.4 through Section 5.7:

(1) Changes in level in means of egress: 7.1.7 of NFPA *101*
(2) Guards: 7.1.8 of NFPA *101*
(3) Doors: 7.2.1 of NFPA *101*
(4) Stairs: 7.2.2 of NFPA *101*

Exception: The provisions of 7.2.2.5.1, 7.2.2.5.2, 7.2.2.6.2, 7.2.2.6.3, and 7.2.2.6.4 of NFPA 101 shall be exempted.

(5) Ramps: 7.2.5 of NFPA *101*

Exception: The provisions of 7.2.5.3.1, 7.2.5.5, and 7.2.5.6.1 of NFPA 101 shall be exempted.

(6) Fire escape ladders: 7.2.9 of NFPA *101*
(7) Alternating tread devices: 7.2.11 of NFPA *101*
(8) Capacity of means of egress: Section 7.3 of NFPA *101*

Exception: The provisions of 7.3.3 and 7.3.4 of NFPA 101 shall be exempted.

(9) Impediments to egress: 7.5.2 of NFPA *101*
(10) Illumination of means of egress: Section 7.8 of NFPA *101*
(11) Emergency lighting: Section 7.9 of NFPA *101*
(12) Marking of means of egress: Section 7.10 of NFPA *101*

5.3.5 Equivalency. Equivalent designs for the features covered in the retained prescriptive requirements mandated by 5.3.1 through 5.3.4 shall be addressed in accordance with the equivalency provisions of Section 1.4.

5.4* Design Scenarios.

5.4.1 General.

5.4.1.1 The proposed design shall be considered to meet the goals and objectives if it achieves the performance criteria for each required design scenario. The AHJ shall approve the parameters involved with required design scenarios.

5.4.1.2* Design scenarios shall be evaluated for each required scenario using a method acceptable to the AHJ and appropriate for the conditions. Each scenario shall be as challenging and realistic as any that could realistically occur in the building.

5.4.1.3* Scenarios selected as design scenarios shall include, but not be limited to, those specified in 5.4.2 through 5.4.5.

5.4.1.3.1 Design fire scenarios demonstrated by the design team to the satisfaction of the AHJ as inappropriate for the building use and conditions shall not be required to be evaluated fully.

5.4.1.3.2 Fire Design Scenario 8 *(see 5.4.2.8)* shall not be required to be applied to fire protection systems or features for which both the level of reliability and the design performance in the absence of the system or feature are acceptable to the AHJ.

5.4.1.4 Each design scenario used in the performance-based design proposal shall be translated into input data specifications, as appropriate for the calculation method or model.

5.4.1.5 Any design scenario specifications that the design analyses do not explicitly address or incorporate and that are, therefore, omitted from input data specifications shall be identified, and a sensitivity analysis of the consequences of that omission shall be performed.

5.4.1.6 Any design scenario specifications modified in input data specifications, because of limitations in test methods or other data generation procedures, shall be identified, and a sensitivity analysis of the consequences of the modification shall be performed.

5.4.2 Required Design Scenarios — Fire.

5.4.2.1* Fire Design Scenario 1. Fire Design Scenario 1 involves an occupancy-specific design scenario representative of a typical fire for the occupancy.

5.4.2.1.1 This design scenario shall explicitly account for the following:

(1) Occupant activities
(2) Number and location
(3) Room size
(4) Furnishings and contents
(5) Fuel properties and ignition sources
(6) Ventilation conditions

5.4.2.1.2 The first item ignited and its location shall be explicitly defined.

5.4.2.2* Fire Design Scenario 2. Fire Design Scenario 2 involves an ultrafast-developing fire in the primary means of egress with interior doors open at the start of the fire. This design scenario shall address the concern regarding a reduction in the number of available means of egress.

5.4.2.3* Fire Design Scenario 3. Fire Design Scenario 3 involves a fire that starts in a normally unoccupied room that can potentially endanger a large number of occupants in a large room or other area. This design scenario shall address the concern regarding a fire starting in a normally unoccupied room and migrating into the space that can, potentially, hold the greatest number of occupants in the building.

5.4.2.4* Fire Design Scenario 4. Fire Design Scenario 4 involves a fire that originates in a concealed wall- or ceiling-space adjacent to a large occupied room. This design scenario shall address the concern regarding a fire originating in a concealed space that does not have either a detection system or suppression system and then spreading into the room within the building that can, potentially, hold the greatest number of occupants.

5.4.2.5* Fire Design Scenario 5. Fire Design Scenario 5 involves a slowly developing fire, shielded from fire protection systems, in close proximity to a high occupancy area. This design scenario shall address the concern regarding a relatively small ignition source causing a significant fire.

5.4.2.6* Fire Design Scenario 6. Fire Design Scenario 6 involves the most severe fire resulting from the largest possible fuel load characteristic of the normal operation of the building. This design scenario shall address the concern regarding a rapidly developing fire with occupants present.

5.4.2.7* Fire Design Scenario 7. Fire Design Scenario 7 involves an outside exposure fire. This design scenario shall address the concern regarding a fire starting at a location remote from the area of concern and either spreading into the area, blocking escape from the area, or developing untenable conditions within the area.

5.4.2.8* Fire Design Scenario 8. Fire Design Scenario 8 involves a fire originating in ordinary combustibles in a room or area with each passive or active fire protection system or feature independently rendered ineffective. This set of design scenarios shall address concerns regarding each fire protection system or fire protection feature, considered individually, being unreliable or becoming unavailable. This scenario shall not be required to be applied to fire protection systems or features for which both the level of reliability and the design performance in the absence of the system are acceptable to the AHJ.

5.4.3 Required Design Scenarios — Explosion.

5.4.3.1* Explosion Design Scenario 1.

5.4.3.1.1 Explosion Design Scenario 1 is the detonation or deflagration of explosive materials being manufactured, stored, handled, or used in a facility.

5.4.3.1.2 Explosion Design Scenario 1 shall address the concern regarding safety of individuals not intimate with the explosion and property protection of adjacent properties and buildings.

5.4.4* Required Design Scenarios — Hazardous Materials.

5.4.4.1 Hazardous Materials Design Scenario 1. Hazardous Materials Design Scenario 1 involves an unauthorized release of hazardous materials from a single control area. This design scenario shall address the concern regarding the spread of hazardous conditions from the point of release.

5.4.4.2 Hazardous Materials Design Scenario 2. Hazardous Materials Design Scenario 2 involves an exposure fire on a location where hazardous materials are stored, used, handled, or dispensed. This design scenario shall address the concern regarding how a fire in a facility affects the safe storage, handling, or use of hazardous materials.

5.4.4.3 Hazardous Materials Design Scenario 3. Hazardous Materials Design Scenario 3 involves the application of an external factor to the hazardous material that is likely to result in a fire, explosion, toxic release, or other unsafe condition. This design scenario shall address the concern regarding the initiation of a hazardous materials event by the application of heat, shock, impact, or water onto a hazardous material being stored, used, handled, or dispensed in the facility.

5.4.4.4 Hazardous Materials Design Scenario 4.

5.4.4.4.1 Hazardous Materials Design Scenario 4 involves an unauthorized discharge with each protection system independently rendered ineffective. This set of design hazardous materials scenarios shall address concern regarding each protection system or protection feature, considered individually, being unreliable or becoming unavailable.

5.4.4.4.2* Hazardous Materials Design Scenario 4 shall not be required to be applied to protection systems or features for which both the level of reliability and the design performance in the absence of the system are acceptable to the AHJ.

5.4.5 Required Design Scenarios — Safety During Building Use.

5.4.5.1* Building Use Design Scenario 1. Building Use Design Scenario 1 involves an event in which the maximum occupant load is in the assembly building and an emergency event occurs blocking the principal exit/entrance to the building. This design scenario shall address the concern of occupants having to take alternative exit routes under crowded conditions.

5.4.5.2 Building Use Design Scenario 2. Building Use Design Scenario 2 involves a fire in an area of a building undergoing construction or demolition while the remainder of the building is occupied. The normal fire suppression system in the area undergoing construction or demolition has been taken out of service. This design scenario shall address the concern regarding the inoperability of certain building fire safety features during construction and demolition in a partially occupied building.

5.5 Evaluation of Proposed Designs.

5.5.1 General.

5.5.1.1 A proposed design's performance shall be assessed relative to each performance objective in Section 4.1 and each applicable scenario in Section 5.4, with the assessment conducted through the use of appropriate calculation methods.

5.5.1.2 The choice of assessment methods shall require the approval of the AHJ.

5.5.2 Use. The design professional shall use the assessment methods to demonstrate that the proposed design achieves the goals and objectives, as measured by the performance criteria in light of the safety margins and uncertainty analysis, for each scenario, given the assumptions.

5.5.3 Input Data.

5.5.3.1 Data.

5.5.3.1.1 Input data for computer fire models shall be obtained in accordance with ASTM E 1591, *Standard Guide for Data for Fire Models.*

5.5.3.1.2 Data for use in analytical models that are not computer-based fire models shall be obtained using appropriate measurement, recording, and storage techniques to ensure the applicability of the data to the analytical method being used.

5.5.3.2 Data Requirements. A complete listing of input data requirements for all models, engineering methods, and other calculation or verification methods required or proposed as part of the performance-based design shall be provided.

5.5.3.3 Uncertainty and Conservatism of Data. Uncertainty in input data shall be analyzed and, as determined appropriate by the AHJ, addressed through the use of conservative values.

5.5.4 Output Data. The assessment methods used shall accurately and appropriately produce the required output data from input data based on the design specifications, assumptions, and scenarios.

5.5.5 Validity. Evidence shall be provided confirming that the assessment methods are valid and appropriate for the proposed facility, use, and conditions.

5.6* Safety Factors. Approved safety factors shall be included in the design methods and calculations to reflect uncertainty in the assumptions, data, and other factors associated with the performance-based design.

5.7 Documentation Requirements.

5.7.1* General.

5.7.1.1 All aspects of the design, including those described in 5.7.2 through 5.7.14, shall be documented.

5.7.1.2 The format and content of the documentation shall be acceptable to the AHJ.

5.7.2* Technical References and Resources.

5.7.2.1 The AHJ shall be provided with sufficient documentation to support the validity, accuracy, relevance, and precision of the proposed methods.

5.7.2.2 The engineering standards, calculation methods, and other forms of scientific information provided shall be appropriate for the particular application and methodologies used.

5.7.3 Facility Design Specifications. All details of the proposed facility design that affect the ability of the facility to meet the stated goals and objectives shall be documented.

5.7.4 Performance Criteria. Performance criteria, with sources, shall be documented.

5.7.5 Occupant Characteristics. Assumptions about occupant characteristics shall be documented.

5.7.6 Design Scenarios. Descriptions of design hazards scenarios shall be documented.

5.7.7 Input Data. Input data to models and assessment methods, including sensitivity analysis, shall be documented.

5.7.8 Output Data. Output data from models and assessment methods, including sensitivity analysis, shall be documented.

5.7.9 Safety Factors. Safety factors utilized shall be documented.

5.7.10 Prescriptive Requirements. Retained prescriptive requirements shall be documented.

5.7.11* Modeling Features.

5.7.11.1 Assumptions made by the model user, and descriptions of models and methods used, including known limitations, shall be documented.

5.7.11.2 Documentation shall be provided that the assessment methods have been used validly and appropriately to address the design specifications, assumptions, and scenarios.

5.7.12 Evidence of Modeler Capability. The design team's relevant experience with the models, test methods, databases, and other assessment methods used in the performance-based design proposal shall be documented.

5.7.13 Performance Evaluation. The performance evaluation summary shall be documented.

5.7.14 Use of Performance-Based Design Option. Design proposals shall include documentation that provides anyone involved in ownership or management of the facility with all of the following notification:

(1) The facility was approved as a performance-based design with certain specified design criteria and assumptions.
(2) Any remodeling, modification, renovation, change in use, or change in the established assumptions requires a re-evaluation and re-approval.

Chapter 6 Classification of Occupancy

6.1 Classification of Occupancy.

6.1.1 General.

6.1.1.1 Occupancy Classification. The occupancy of a building or structure, or portion of a building or structure, shall be classified in accordance with 6.1.2 through 6.1.13. Occupancy classification shall be subject to the ruling of the AHJ where there is a question of proper classification in any individual case. [*101*:6.1.1.1]

6.1.1.2 Special Structures. Occupancies in special structures shall conform to the requirements of Section 20.16. [*101*:6.1.1.2]

6.1.2 Assembly. For requirements, see Section 20.1. [*101:* 6.1.2]

6.1.2.1* Definition — Assembly Occupancy. An occupancy (1) used for a gathering of 50 or more persons for deliberation, worship, entertainment, eating, drinking, amusement, awaiting transportation, or similar uses; or (2) used as a special amusement building, regardless of occupant load. [*101*:6.1.2.1]

6.1.2.2 Small Assembly Uses. Occupancy of any room or space for assembly purposes by fewer than 50 persons in another occupancy and incidental to such other occupancy shall be classified as part of the other occupancy and shall be subject to the provisions applicable thereto. [*101*:6.1.2.2]

6.1.3 Educational. For requirements, see Section 20.2. [*101*:6.1.3]

6.1.3.1* Definition — Educational Occupancy. An occupancy used for educational purposes through the twelfth grade by six or more persons for 4 or more hours per day or more than 12 hours per week. [*101*:6.1.3.1]

6.1.3.2 Other Occupancies. Other occupancies associated with educational institutions shall be in accordance with the appropriate parts of this *Code* and NFPA *101*. [*101*:6.1.3.2]

6.1.3.3 Incidental Instruction. In cases where instruction is incidental to some other occupancy, the section of this *Code* and NFPA *101* governing such other occupancy shall apply. [*101*:6.1.3.3]

6.1.4 Day Care. For requirements, see Section 20.3. [*101*:6.1.4]

6.1.4.1* Definition — Day-Care Occupancy. An occupancy in which four or more clients receive care, maintenance, and supervision, by other than their relatives or legal guardians, for less than 24 hours per day. [*101*:6.1.4.1]

6.1.4.2 Other. (Reserved)

6.1.5 Health Care. For requirements, see Section 20.4. [*101*:6.1.5]

6.1.5.1* Definition — Health Care Occupancy. An occupancy used for purposes of medical or other treatment or care of four or more persons where such occupants are mostly incapable of self-preservation due to age, physical or mental disability, or because of security measures not under the occupants' control. [*101*:6.1.5.1]

6.1.5.2 Other. (Reserved)

6.1.6 Ambulatory Health Care. For requirements, see Section 20.6. [*101*:6.1.6]

6.1.6.1* Definition – Ambulatory Health Care Occupancy. A building or portion thereof used to provide services or treatment simultaneously to four or more patients that provides, on an outpatient basis, one or more of the following:

(1) Treatment for patients that renders the patients incapable of taking action for self-preservation under emergency conditions without the assistance of others
(2) Anesthesia that renders the patients incapable of taking action for self-preservation under emergency conditions without the assistance of others
(3) Emergency or urgent care for patients who, due to the nature of their injury or illness, are incapable of taking action for self-preservation under emergency conditions without the assistance of others [*101*:6.1.6.1]

6.1.6.2 Other. (Reserved)

6.1.7 Detention and Correctional. For requirements, see Section 20.7. [*101*:6.1.7]

6.1.7.1* Definition — Detention and Correctional Occupancy. An occupancy used to house one or more persons under varied degrees of restraint or security where such occupants are mostly incapable of self-preservation because of security measures not under the occupants' control. [*101*:6.1.7.1]

6.1.7.2* Nonresidential Uses. Within detention and correctional facilities, uses other than residential housing shall be in accordance with the appropriate chapter of this *Code* and NFPA *101*. *(See 22.1.2.3 and 23.1.2.3 of NFPA 101.)* [*101*:6.1.7.2]

6.1.8 Residential. For requirements, see Sections 20.5 and 20.8 through 20.11. [*101*:6.1.8]

6.1.8.1 Definition — Residential Occupancy. An occupancy that provides sleeping accommodations for purposes other than health care or detention and correctional. [*101*:6.1.8.1]

6.1.8.1.1* Definition — One- and Two-Family Dwelling Unit. A building that contains not more than two dwelling units with independent cooking and bathroom facilities. [*101*:6.1.8.1.1]

6.1.8.1.2 Definition — Lodging or Rooming House. A building or portion thereof that does not qualify as a one- or two-family dwelling, that provides sleeping accommodations for a total of 16 or fewer people on a transient or permanent basis, without personal care services, with or without meals, but with-

out separate cooking facilities for individual occupants. [*101*:6.1.8.1.2]

6.1.8.1.3* Definition — Hotel. A building or groups of buildings under the same management in which there are sleeping accommodations for more than 16 persons and primarily used by transients for lodging with or without meals. [*101*:6.1.8.1.3]

6.1.8.1.4* Definition — Dormitory. A building or a space in a building in which group sleeping accommodations are provided for more than 16 persons who are not members of the same family in one room, or a series of closely associated rooms, under joint occupancy and single management, with or without meals, but without individual cooking facilities. [*101*:6.1.8.1.4]

6.1.8.1.5 Definition — Apartment Building. A building or portion thereof containing three or more dwelling units with independent cooking and bathroom facilities. [*101*:6.1.8.1.5]

6.1.8.2 Other. (Reserved)

6.1.9 Residential Board and Care. For requirements, see Section 20.5. [*101*:6.1.9]

6.1.9.1* Definition — Residential Board and Care Occupancy. A building or portion thereof that is used for lodging and boarding of four or more residents, not related by blood or marriage to the owners or operators, for the purpose of providing personal care services. [*101*:6.1.9.1]

6.1.9.2 Other. (Reserved)

6.1.10 Mercantile. For requirements, see Section 20.12. [*101*:6.1.10]

6.1.10.1* Definition — Mercantile Occupancy. An occupancy used for the display and sale of merchandise. [*101*:6.1.10.1]

6.1.10.2 Other. (Reserved)

6.1.11 Business. For requirements, see Section 20.13. [*101*:6.1.11]

6.1.11.1* Definition — Business Occupancy. An occupancy used for the transaction of business other than mercantile. [*101*:6.1.11.1]

6.1.11.2 Other. (Reserved)

6.1.12 Industrial. For requirements, see Section 20.14. [*101*:6.1.12]

6.1.12.1* Definition — Industrial Occupancy. An occupancy in which products are manufactured or in which processing, assembling, mixing, packaging, finishing, decorating, or repair operations are conducted. [*101*:6.1.12.1]

6.1.12.2 Other. (Reserved)

6.1.13 Storage. For requirements, see Section 20.15. [*101*:6.1.13]

6.1.13.1* Definition — Storage Occupancy. An occupancy used primarily for the storage or sheltering of goods, merchandise, products, vehicles, or animals. [*101*:6.1.13.1]

6.1.13.2 Other. (Reserved)

6.1.14 Multiple Occupancies.

6.1.14.1 General.

6.1.14.1.1 Multiple occupancies shall comply with the requirements of 6.1.14.1 and one of the following:

(1) Mixed occupancies — 6.1.14.3
(2) Separated occupancies — 6.1.14.4[*101*:6.1.14.1.1]

6.1.14.1.2 Where exit access from an occupancy traverses another occupancy, the multiple occupancy shall be treated as a mixed occupancy. [*101*:6.1.14.1.2]

6.1.14.1.3* Where incidental to another occupancy, areas used as follows shall be permitted to be considered part of the predominant occupancy and shall be subject to the provisions of this *Code* and NFPA *101* that apply to the predominant occupancy:

(1) Mercantile, business, industrial, or storage use
(2)*Nonresidential use with an occupant load fewer than that established by Section 6.1 for the occupancy threshold [*101*:6.1.14.1.3]

6.1.14.2 Definitions.

6.1.14.2.1 Multiple Occupancy. A building or structure in which two or more classes of occupancy exist. [*101*:6.1.14.2.1]

6.1.14.2.2 Mixed Occupancy. A multiple occupancy where the occupancies are intermingled. [*101*:6.1.14.2.2]

6.1.14.2.3 Separated Occupancy. A multiple occupancy where the occupancies are separated by fire resistance–rated assemblies. [*101*:6.1.14.2.3]

6.1.14.3 Mixed Occupancies.

6.1.14.3.1 Each portion of the building shall be classified as to its use in accordance with Section 6.1. [*101*:6.1.14.3.1]

6.1.14.3.2 The means of egress facilities, type of construction, protection, and other safeguards in the building shall comply with the most restrictive fire and life safety requirements of the occupancies involved. [*101*:6.1.14.3.2]

6.1.14.4 Separated Occupancies.

6.1.14.4.1 Where separated occupancies are provided, each part of the building comprising a distinct occupancy, as described in this chapter, shall be completely separated from other occupancies by fire-resistive assemblies as specified in 6.1.14.4.2, 6.1.14.4.3, and Table 6.1.14.4.1(a) and Table 6.1.14.4.1(b), unless separation is provided by approved existing separations. [*101*:6.1.14.4.1]

6.1.14.4.2 Occupancy separations shall be classified as 3-hour fire resistance–rated, 2-hour fire resistance–rated, or 1-hour fire resistance–rated and shall meet the requirements of Chapter 8 of NFPA *101*. [*101*:6.1.14.4.2]

6.1.14.4.3 The fire resistance rating specified in Table 6.1.14.4.1(a) and Table 6.1.14.4.1(b) shall be permitted to be reduced by 1 hour, but in no case shall it be reduced to less than 1 hour, where the building is protected throughout by an approved automatic sprinkler system in accordance with NFPA 13 and supervised in accordance with 13.3.1.7 unless prohibited by the "daggered" entries in the tables. [*101*:6.1.14.4.3]

6.1.14.4.4 Occupancy separations shall be vertical, horizontal, or both or, when necessary, of such other form as required to provide complete separation between occupancy divisions in the building. [*101*:6.1.14.4.4]

Table 6.1.14.4.1(a) Required Separation of Occupancies (hours)*, Part 1

Occupancy	Assembly ≤ 300	Assembly >300 to ≤1000	Assembly >1000	Educational	Day-Care >12 Clients	Day-Care Homes	Health Care	Ambulatory Health Care	Detention & Correctional	One- & Two-Family Dwellings	Lodging or Rooming Houses	Hotels & Dormitories
Assembly ≤ 300		0	0	2	2	1	2†	2	2†	2	2	2
Assembly >300 to ≤1000			0	2	2	2	2†	2	2†	2	2	2
Assembly >1000				2	2	2	2†	2	2†	2	2	2
Educational					2	2	2†	2	2†	2	2	2
Day-Care >12 Clients						1	2†	2	2†	2	2	2
Day-Care Homes							2†	2	2†	2	2	2
Health Care								2†	2†	2†	2†	2†
Ambulatory Health Care									2†	2	2	2
Detention & Correctional										2†	2†	2†
One- & Two-Family Dwellings											1	1
Lodging or Rooming Houses												1
Hotels & Dormitories												

NP: Not permitted.

* The fire resistance rating is permitted to be reduced by 1 hour, but in no case to less than 1 hour, where the building is protected throughout by an approved automatic sprinkler system in accordance with NFPA 13 and supervised in accordance with 13.3.1.7.

† The 1-hour reduction due to the presence of sprinklers in accordance with the asterisk footnote is not permitted. [*101*:Table 6.1.14.4.1(a)]

Chapter 7 Reserved

Chapter 8 Reserved

Chapter 9 Reserved

Chapter 10 General Fire Safety

10.1 Fundamental Requirements.

10.1.1 Every new and existing building or structure shall be constructed, arranged, equipped, maintained, and operated in accordance with this *Code* so as to provide a reasonable level of life safety, property protection, and public welfare from the actual and potential hazards created by fire, explosion, and other hazardous conditions.

10.1.2* ***Life Safety Code.*** Every new and existing building shall comply with this *Code* and NFPA *101, Life Safety Code.*

10.1.3 Building Code. Where a building code has been adopted, all new construction shall comply with this *Code* and with the building code.

10.1.4 Any person who deliberately, or through negligence, sets fire to or causes the burning of any combustible material in such a manner as to endanger the safety of any person or property shall be deemed to be in violation of this *Code.*

10.1.5 The AHJ shall have the authority to prohibit any or all open flames or other sources of ignition where circumstances make such conditions hazardous.

10.2 Owner/Occupant Responsibilities.

10.2.1 The owner, operator, or occupant shall be responsible for compliance with this *Code.*

10.2.2 The AHJ shall be permitted to require the owner, operator, or occupant to provide tests or test reports, without expense to the AHJ, as proof of compliance with the intent of this *Code.*

10.2.3 The owner, operator, or occupant of a building that is deemed unsafe by the AHJ shall abate, through corrective action approved by the AHJ, the condition causing the building to be unsafe either by repair, rehabilitation, demolition, or other corrective action approved by the AHJ.

10.2.4 The owner, operator, or occupant, or any person in control of a building or premises shall keep records of all maintenance, inspections, and testing of fire protection systems, fire alarm systems, smoke control systems, emergency evacuation and relocation drills, emergency plans, emergency power, elevators, and other equipment as required by the AHJ.

Table 6.1.14.4.1(b) Required Separation of Occupancies (hours)*, Part 2

Occupancy	Apartment Buildings	Board & Care, Small	Board & Care, Large	Mercantile	Mercantile, Mall	Mercantile, Bulk Retail	Business	Industrial, General Purpose	Industrial, Special Purpose	Industrial, High Hazard	Storage, Low & Ordinary Hazard	Storage, High Hazard
Assembly ≤ 300	2	2	2	2	2	3	1	2	2	3	2	3
Assembly >300 to ≤1000	2	2	2	2	2	3	2	2	2	3	2	3
Assembly >1000	2	2	2	2	2	3	2	3	2	3	3	3
Educational	2	2	2	2	2	3	2	3	3	3	3	3
Dare-Care >12 Clients	2	2	2	2	2	3	2	3	3	3	3	3
Day-Care Homes	2	2	2	2	2	3	2	3	3	3	2	3
Health Care	2†	2†	2†	2†	2†	2†	2†	2†	2†	2†	2†	2†
Ambulatory Health Care	2	2	2	2	2	2†	1	2	2	2†	2	2†
Detention & Correctional	2†	2†	2†	2†	2†	2†	2†	2†	2†	NP	2†	NP
One- & Two-Family Dwellings	1	1	2	2	2	3	2	2	2	3	2	3
Lodging or Rooming Houses	1	2	2	2	2	3	2	2	2	3	2	3
Hotels & Dormitories	1	2	2	2	2	3	2	2	2	3	2	3
Apartment Buildings		2	2	2	2	3	2	2	2	3	2	3
Board & Care, Small			1	2	2	3	2	3	3	3	3	3
Board & Care, Large				2	2	3	2	3	3	3	3	3
Mercantile					0	3	2	2	2	3	2	3
Mercantile, Mall						3	2	3	3	3	2	3
Mercantile, Bulk Retail							2	2	2	3	2	2
Business								2	2	2	2	2
Industrial, General Purpose									1	1	1	1
Industrial, Special Purpose										1	1	1
Industrial, High Hazard											1	1
Storage, Low & Ordinary Hazard												1
Storage, High Hazard												

NP: Not permitted.

* The fire resistance rating is permitted to be reduced by 1 hour, but in no case to less than 1 hour, where the building is protected throughout by an approved automatic sprinkler system in accordance with NFPA 13 and supervised in accordance with 13.3.1.7.

† *The 1-hour reduction due to the presence of sprinklers* in accordance with the asterisk footnote is not permitted. [*101*:Table 6.1.14.4.1(b)].

10.2.5 All records required to be kept shall be maintained until their useful life has been served, as required by law, or as required by the AHJ.

10.3 Occupancy.

10.3.1 No new construction or existing building shall be occupied in whole or in part in violation of the provisions of this *Code.*

10.3.2 Existing buildings that are occupied at the time of adoption of this *Code* shall remain in use provided that the following conditions are met:

(1) The occupancy classification remains the same.
(2) No condition deemed hazardous to life or property exists that would constitute an imminent danger.

10.3.3* Buildings or portions of buildings, except for routine maintenance or repair, shall not be occupied during construction, repair, or alteration without the approval of the AHJ if required means of egress are impaired or required fire protection systems are out of service.

10.3.4 Change of Use or Occupancy Classification.

10.3.4.1 In any building or structure, whether or not a physical alteration is needed, a change from one use or occupancy classification to another shall comply with 4.6.7 of NFPA *101.* [***101***:4.6.11]

10.3.4.2 Occupancy classifications and subclassifications, as defined, shall be in accordance with Chapter 6.

10.4 Maintenance, Inspection, and Testing. Also see 4.5.8.

10.4.1 Whenever or wherever any device, equipment, system, condition, arrangement, level of protection, fire-resistive construction, or any other feature is required for compliance with the provisions of this *Code,* such device, equipment, system, condition, arrangement, level of protection, fire-resistive construction, or other feature shall thereafter be continuously maintained in accordance with applicable NFPA requirements or requirements developed as part of a performance-based design, or as directed by the AHJ. [***101***:4.6.12.1]

10.4.2 No existing life safety feature shall be removed or reduced where such feature is a requirement for new construction. [***101***:4.6.12.2]

10.4.3* Existing life safety features obvious to the public, if not required by the *Code,* shall be either maintained or removed. [***101***:4.6.12.3]

10.4.4 Any device, equipment, system, condition, arrangement, level of protection, fire-resistive construction, or any other feature requiring periodic testing, inspection, or operation to ensure its maintenance shall be tested, inspected, or operated as specified elsewhere in this *Code* or as directed by the AHJ. [***101***:4.6.12.4]

10.4.5 Maintenance, inspection, and testing shall be performed under the supervision of a responsible person who shall ensure that testing, inspection, and maintenance are made at specified intervals in accordance with applicable NFPA standards or as directed by the AHJ. [***101***:4.6.12.5]

10.5 Building Evacuation.

10.5.1 No person shall fail to leave a building when notified to do so when directed by the AHJ as a result of a known or perceived emergency.

10.5.2* No person shall fail to leave any overcrowded premises when ordered to do so by the AHJ.

10.6* Fire Drills.

10.6.1 Where Required. Emergency egress and relocation drills conforming to the provisions of this *Code* shall be conducted as specified by the provisions of Chapter 20 of this *Code* or Chapters 11 through 42 of NFPA *101,* or by appropriate action of the AHJ. Drills shall be designed in cooperation with the local authorities. [***101***:4.7.1]

10.6.2* Drill Frequency. Emergency egress and relocation drills, where required by Chapter 20 of this *Code* or Chapters 11 through 42 of NFPA *101,* or the AHJ, shall be held with sufficient frequency to familiarize occupants with the drill procedure and to establish conduct of the drill as a matter of routine. Drills shall include suitable procedures to ensure that all persons subject to the drill participate. [***101***:4.7.2]

10.6.3 Competency. Responsibility for the planning and conducting of drills shall be assigned only to competent persons qualified to exercise leadership.

10.6.4 Orderly Evacuation. When conducting drills, emphasis shall be placed on orderly evacuation rather than on speed. [***101***:4.7.3]

10.6.5* Simulated Conditions. Drills shall be held at expected and unexpected times and under varying conditions to simulate the unusual conditions that can occur in an actual emergency. [***101***:4.7.4]

10.6.6 Relocation Area. Drill participants shall relocate to a predetermined location and remain at such location until a recall or dismissal signal is given. [***101***:4.7.5]

10.6.7* A written record of each drill shall be completed by the person responsible for conducting the drill and maintained in an approved manner. [***101***:4.7.6]

10.7 Reporting of Fires and Other Emergencies.

10.7.1 Fire Reporting.

10.7.1.1 The person discovering any unwanted fire, regardless of magnitude, shall immediately notify the fire department.

10.7.1.2 Facilities that have established on-premises firefighting organizations and have coordinated and arranged procedures approved by the AHJ shall not need to notify the fire department.

10.7.1.3* The owner, manager, occupant, or any person in control of such building or premises, upon discovery of an unwanted fire or evidence of there having been an unwanted fire even though it has apparently been extinguished, shall immediately notify the fire department.

10.7.1.4 No person shall make, issue, post, or maintain any regulation or order, written or verbal, that would require any person to take any unnecessary delaying action prior to reporting a fire to the fire department.

10.7.2 Notification of unauthorized discharge of hazardous materials shall be in accordance with Chapter 60.

10.7.3 No person shall deliberately or maliciously turn in an alarm of fire when in fact that person knows that no fire exists.

10.7.4 It shall be a violation of this *Code* for any person to willfully make any false, fraudulent, misleading, or unfounded

report or statement or to willfully misrepresent any fact with the intention of misleading any fire department personnel or that interferes with the operation of the fire department.

10.8 Tampering with Fire Safety Equipment.

10.8.1 No person shall render any portable or fixed fire-extinguishing system or device or any fire-warning system inoperative or inaccessible.

10.8.1.1 As necessary during emergencies, maintenance, drills, prescribed testing, alterations, or renovations, portable or fixed fire-extinguishing systems or devices or any fire-warning system shall be permitted to be made inoperative or inaccessible.

10.8.2 No person shall render a system or device inoperative during an emergency unless by direction of the incident commander.

10.8.3 No person, except a person authorized by the AHJ, shall remove, unlock, destroy, or tamper with in any manner any locked gate, door, or barricade; chain; enclosure; sign; tag; or seal that has been required by the AHJ pursuant to this *Code.*

10.9 Emergency Plans.

10.9.1 Where Required. Emergency plans shall be provided for high-rise, health care, ambulatory health care, residential board and care, assembly, day-care centers, special amusement buildings, detention and correctional occupancies, underground and windowless structures, facilities storing or handling materials covered by Chapter 20, or where required by the AHJ.

10.9.2* Plan Requirements. Emergency plans shall be developed in accordance with NFPA 1600, *Standard on Disaster/Emergency Management and Business Continuity Programs,* and shall include the procedures for reporting of emergencies, occupant and staff response to emergencies, the type and coverage of building fire protection systems, and other items required by the AHJ.

10.9.2.1 Review. When required, emergency plans shall be submitted to the AHJ for review.

10.9.2.2 Maintenance. Emergency plans shall be reviewed and updated annually. Revised plans shall be submitted for review and updates shall be provided whenever changes are made in the occupancy or physical arrangement of the building or fire protection systems or features.

10.9.3 The owner shall provide floor plans to the fire department in a manner approved by the AHJ and the fire department.

10.10 Smoking.

10.10.1 Where smoking is considered a fire hazard, the AHJ shall be authorized to order the owner in writing to post "No Smoking" signs in conspicuous, designated locations where smoking is prohibited.

10.10.2 In areas where smoking is permitted, noncombustible ashtrays shall be provided.

10.10.3 Removal or destruction of any required "No Smoking" sign shall be prohibited.

10.10.4 Smoking or depositing any lighted or smoldering substance in a place where required "No Smoking" signs are posted shall be prohibited.

10.11 Open Fires, Incinerators, and Commercial Fireplaces.

10.11.1 Permits. Permits, where required, shall comply with Section 1.12.

10.11.1.1 Permits shall not be required for cooking and recreational fires.

10.11.1.2 Where burning is conducted on public property or the property of someone other than the permit applicant, the permit applicant shall demonstrate that permission has been obtained by the appropriate government agency, the owner, or the owner's authorized agent.

10.11.1.3 When limits for atmospheric conditions or hours restrict burning, such limits shall be designated in the permit restrictions.

10.11.1.4 Instructions or stipulations of permit shall be adhered to.

10.11.2 Open Fires.

10.11.2.1 Permitted open fires shall be located not less than 50 ft (15 m) from any structure.

10.11.2.2 Burning hours shall be prescribed by the AHJ.

10.11.2.3 Recreational fires shall not be located within 25 ft (7.6 m) of a structure or combustible material unless contained in an approved manner.

10.11.2.4 Conditions that could cause a fire to spread to within 25 ft (7.6 m) of a structure shall be eliminated prior to ignition.

10.11.3 Open fires and cooking fires shall be constantly attended by a competent person until such fire is extinguished. This person shall have a garden hose connected to the water supply or other fire-extinguishing equipment readily available for use.

10.11.4 The AHJ shall have the authority to prohibit any or all open fires when atmospheric conditions or local circumstances make such fires hazardous.

10.11.5 During that period of the year declared by the AHJ to be the dry season, it shall be unlawful to set fires to any brush or forest-covered land.

10.11.6 On such occasions when the chief executive of the jurisdiction declares a dry season and establishes special regulations on the use of any form of fire or smoking material, the AHJ shall have the authority to assist in the enforcement of such regulations.

10.11.7 For other than one- and two-family dwellings, no hibachi, gas-fired grill, charcoal grill, or other similar devices used for cooking, heating, or any other purpose, shall be used or kindled on any balcony or under any overhanging portion or within 10 ft (3 m) of any structure. Listed electric ranges, grills, or similar electrical apparatus shall be permitted.

10.11.8 Every commercial incinerator and commercial barbecue fireplace shall be equipped and maintained with a spark arrestor and shall be maintained in good condition, working order, and repair at all times.

10.11.9 Discontinuance. The AHJ shall be authorized to require any fire to be immediately discontinued if the fire is determined to constitute a hazardous condition.

10.12 Fire Protection Markings.

10.12.1 Premises Identification.

10.12.1.1* New and existing buildings shall have approved address numbers placed in a position to be plainly legible and visible from the street or road fronting the property.

10.12.1.2 Address numbers shall contrast with their background.

10.12.1.3 Address numbers shall be arabic numerals or alphabet letters.

10.12.2 Shaftways to Be Marked.

10.12.2.1 Every outside opening accessible to the fire department that opens directly on any hoistway or shaftway communicating between two or more floors in a building shall be plainly marked with the a sign in accordance with 10.12.2.2.

10.12.2.2 Shaftway signs shall be in red letters at least 6 in. (15.2 cm) high on a white background stating "SHAFTWAY."

10.12.2.3 Such warning signs shall be placed so as to be readily discernible from the outside of the building.

10.12.3* Stairway Marking.

10.12.3.1 Enclosed stairs meeting either of the following two conditions shall comply with 10.12.3.1.1 through 10.12.3.1.8:

(1) The stair is a new enclosed stair serving three or more stories.
(2) The stair is an existing enclosed stair serving five or more stories. [*101:*7.2.2.5.4.1]

10.12.3.1.1 The stairs shall be provided with special signage within the enclosure at each floor landing. [*101:*7.2.2.5.4.1(A)]

10.12.3.1.2 The signage shall indicate the floor level. [*101:*7.2.2.5.4.1(B)]

10.12.3.1.3 The signage shall indicate the terminus of the top and bottom of the stair enclosure. [*101:*7.2.2.5.4.1(C)]

10.12.3.1.4 The signage shall indicate the identification of the stair enclosure. [*101:*7.2.2.5.4.1(D)]

10.12.3.1.5 The signage shall indicate the floor level of, and the direction to, exit discharge. [*101:*7.2.2.5.4.1(E)]

10.12.3.1.6 The signage shall be located inside the enclosure approximately 60 in. (1525 mm) above the floor landing in a position that is visible when the door is in the open or closed position. [*101:*7.2.2.5.4.1(F)]

10.12.3.1.7 The signage shall comply with 14.14.6.5.1 and 14.14.6.5.2. [*101:*7.2.2.5.4.1(G)]

10.12.3.1.8 The floor level designation shall also be tactile in accordance with ICC/ANSI A117.1, *American National Standard for Accessible and Usable Buildings and Facilities.* [*101:*7.2.2.5.4.1(H)]

10.12.3.2 Wherever an enclosed stair requires travel in an upward direction to reach the level of exit discharge, special signs with directional indicators showing the direction to the level of exit discharge shall be provided at each floor level landing from which upward direction of travel is required, unless otherwise provided in 10.12.3.2.1 and 10.12.3.2.2, and the following also shall apply:

(1) Such signage shall comply with 14.14.6.5.1.
(2) Such signage shall be visible when the door is in the open or closed position. [*101:*7.2.2.5.4.2]

10.12.3.2.1 The requirement of 10.12.3.2 shall not apply where signs required by 10.12.3.1.1 are provided. [*101:*7.2.2.5.4.2(A)]

10.12.3.2.2 The requirement of 10.12.3.2 shall not apply to stairs extending not more than one story below the level of exit discharge where the exit discharge is clearly obvious. [*101:*7.2.2.5.4.2(B)]

10.12.3.3 The sign shall be painted or stenciled on the wall or on a separate sign securely attached to the wall. [*101:*7.2.2.5.4.3]

10.12.3.4 Letters and numerals shall be of bold type and of contrasting color to the background.

10.12.3.5 The stairway identification letter shall be located at the top of the sign in minimum 1 in. (25 mm) high lettering and shall be in accordance with 14.14.6.5.2. [*101:*7.2.2.5.4.4]

10.12.3.6 Roof access or the lack thereof shall be designated by a sign that reads ROOF ACCESS or NO ROOF ACCESS and located under the stairway identification letter. Lettering shall be a minimum of 1 in. (25 mm) high and shall be in accordance with 14.14.6.5.2. [*101:*7.2.2.5.4.5]

10.12.3.7 The floor level number shall be located in the middle of the sign in minimum 5 in. (125 mm) high numbers and shall be in accordance with 14.14.6.5.2. [*101:*7.2.2.5.4.6]

10.12.3.7.1 Mezzanine levels shall have the letter "M" or other appropriate identification letter preceding the floor number. [*101:*7.2.2.5.4.6]

10.12.3.7.2 Basement levels shall have the letter "B" or other appropriate identification letter preceding the floor level number. [*101:*7.2.2.5.4.6]

10.12.3.8 The lower and upper terminus of the stairway shall be placed at the bottom of the sign in minimum 1 in. (2.5 cm) high bold block lettering.

10.12.3.9 These signs shall be maintained in an approved manner.

10.12.3.10 Existing approved signs shall be permitted.

10.13 Vacant Buildings and Premises.

10.13.1 Every person owning or having charge or control of any vacant building or premises shall remove all combustible storage, waste, refuse, and vegetation and shall lock, barricade, or otherwise secure all windows, doors, and other openings to prohibit entry by unauthorized persons.

10.13.1.1 The requirement of 10.13.1 shall not apply to vacation or resort facilities or buildings used on a seasonal basis or the temporary vacancy of a building for tenant change or remodeling purposes.

10.13.2 All fire protection systems shall be maintained in service in vacant buildings.

10.13.2.1* With the approval of the AHJ, fire protection and fire alarm systems in vacant buildings shall be permitted to be removed from service.

10.13.2.2 When required by the AHJ, other systems or components pertaining to fire protection shall be maintained.

10.13.3 The AHJ shall have the authority to require an inspection and test of any fire protection system or fire alarm system that has been out of service for 30 days or more before restored back into service.

10.14 Combustible Vegetation.

10.14.1 Combustible vegetation, including natural cut Christmas trees, shall be in accordance with Table 10.14.1.

10.14.2 In any occupancy, limited quantities of combustible vegetation shall be permitted where the AHJ determines that adequate safeguards are provided based on the quantity and nature of the combustible vegetation.

Table 10.14.1 Provisions for Christmas Trees by Occupancy

Occupancy	No Trees Permitted	Cut Tree Permitted with Automatic Sprinkler Systems	Cut Tree Permitted Without Automatic Sprinkler Systems	Balled Tree Permitted
Ambulatory health care				X
Apartment buildings		Within unit	Within unit	X
Assembly	X			
Board and care	X			
Business		X		X
Day-care		X		X
Detention and correctional	X			
Dormitories	X			
Educational	X			
Health care				X
Hotels	X			
Industrial		X	X	X
Lodging and rooming		X		X
Mercantile		X		X
One and two family		X	X	X
Storage		X	X	X

10.14.3* Provisions for Fire Retardance.

10.14.3.1 Artificial vegetation and artificial Christmas trees shall be labeled or otherwise identified or certified by the manufacturer as being fire retardant.

10.14.3.2 Such fire retardance shall be demonstrated by each individual decorative vegetation item, including any decorative lighting, in an approved manner.

10.14.4 Vegetation and Christmas trees shall not obstruct corridors, exit ways, or other means of egress.

10.14.5 Only listed electrical lights and wiring shall be used on natural or artificial combustible vegetation, natural or artificial Christmas trees, and other similar decorations.

10.14.6 Electrical lights shall be prohibited on metal artificial trees.

10.14.7 Open flames such as from candles, lanterns, kerosene heaters, and gas-fired heaters shall not be located on or near combustible vegetation, Christmas trees, or other similar combustible materials.

10.14.8 Combustible vegetation and natural cut Christmas trees shall not be located near heating vents or other fixed or portable heating devices that could cause it to dry out prematurely or to be ignited.

10.14.9 Provisions for Natural Cut Trees.

10.14.9.1 Where a natural cut tree is permitted, the bottom end of the trunk shall be cut off with a straight fresh cut at least ½ in. (13 mm) above the end prior to placing the tree in a stand to allow the tree to absorb water.

10.14.9.2 The tree shall be placed in a suitable stand with water.

10.14.9.3 The water level shall be maintained above the fresh cut and checked at least once daily.

10.14.9.4* The tree shall be removed from the building immediately upon evidence of dryness.

10.14.10 Exterior Vegetation.

10.14.10.1 Cut or uncut weeds, grass, vines, and other vegetation shall be removed when determined by the AHJ to be a fire hazard.

10.14.10.2 When the AHJ determines that total removal of growth is impractical due to size or environmental factors, approved fuel breaks shall be established.

10.14.10.3 Designated areas shall be cleared of combustible vegetation to establish the fuel breaks.

10.15 Special Outdoor Events, Carnivals, and Fairs.

10.15.1 Permits. Permits, where required, shall comply with Section 1.12.

10.15.2 The AHJ shall be permitted to regulate all outdoor events such as carnivals and fairs as it pertains to access for emergency vehicles; access to fire protection equipment; placement of stands, concession booths, and exhibits; and the control of hazardous conditions dangerous to life and property.

10.15.3 Life Safety Evaluation. The AHJ shall be permitted to order a life safety evaluation in accordance with 12.4.1 of NFPA *101*.

10.15.4 Standby Fire Personnel. Where required by the AHJ, standby fire personnel shall be provided and comply with 1.7.15.

10.15.5 Portable Fire Extinguishers. A minimum of one portable fire extinguisher shall be provided for each concession stand where required by the AHJ in accordance with Section 13.6.

10.15.6 Smoke Alarms. A minimum of one single station smoke alarm shall be located in all stock or equipment trailers when they are used for sleeping purposes.

10.15.7 Electrical Equipment. Electrical equipment and installations shall comply with Section 11.1.

10.15.8 Cooking. Concession stands utilized for cooking shall have a minimum of 10 ft (3 m) of clearance on two sides and shall not be located within 10 ft (3 m) of amusement rides or devices.

10.15.9 Communications. Where required by the AHJ, a method of notifying the fire department in the event of an emergency shall be provided.

10.15.9.1 Methods of notifying the fire department shall consist of a telephone, an alarm system connected to the fire department or other approved agency, or other approved means.

10.15.9.2 Methods of notifying the fire department shall be readily available to the public.

10.15.10 Internal Combustion Power Sources.

10.15.10.1 Fueling. Fuel tanks shall be of adequate capacity to permit uninterrupted operation during normal operating hours.

10.15.10.2 Refueling. Refueling shall be conducted only when not in use.

10.15.10.3 Protection. Internal combustion power sources shall be isolated from contact with the public by either physical guards, fencing, or an enclosure.

10.15.10.4 Fire Extinguishers. A minimum of one portable fire extinguisher with a rating of not less than 2-A:10-B:C shall be provided.

10.15.11 Crop Maze.

10.15.11.1 Permits. Permits, where required, shall comply with Section 1.12.

10.15.11.2 The owner or operator of a crop maze amusement attraction shall advise all employees of the fire and life safety regulations established in this subsection prior to the employees assuming their respective duties.

10.15.11.3 The owner or operator of a crop maze or their employees shall provide safety instructions to the visitors and patrons of a crop maze prior to their entrance to the maze.

10.15.11.4 A minimum of two employees shall be on duty to monitor a crop maze during hours of operation. A minimum of one of the employees shall be located on an elevated platform a minimum of 10 ft (3 m) above the maze.

10.15.11.5 The owner or operator of a crop maze shall contact the local fire department and provide the fire department with the opportunity to prepare a pre-plan of the crop maze amusement attraction prior to the start of seasonal operations.

10.15.11.6* No open flame–producing devices or equipment shall be permitted within the confines of the crop maze.

10.15.11.7 No smoking shall be permitted within the confines of the crop maze.

10.15.11.8 No more than 200 person per acre, including adults and children, shall occupy the crop maze at any one time.

10.15.11.9 Motorized vehicles shall not be parked within 75 ft (23 m) of a crop maze.

10.15.11.10 A fuel break of a minimum of 20 ft (6 m) wide shall be cleared between a crop maze and any vehicles or vegetation outside the maze.

10.15.11.11 A public address system shall be readily available to employees at a crop maze to assist them in making announcements to the visitors or patrons of a crop maze in the event of an emergency. A bull horn or loud speaker shall suffice as a public address system.

10.15.11.12 The entrance and exit from a crop maze shall not be blocked or obstructed at any time the maze is open for business and occupied by the public.

10.15.11.13 Fireworks.

10.15.11.13.1 Fireworks shall not be discharged within a minimum of 300 ft (91 m) of any crop maze at any time.

10.15.11.13.2 The use of display fireworks shall comply with Chapter 65 in addition to the requirements of 10.15.11.13.

10.16* Outside Storage.

10.16.1 Outside storage of combustible materials shall not be located within 10 ft (3 m) of a property line.

10.16.2 The separation distance shall be allowed to be reduced to 3 ft (0.9 m) for storage not exceeding 6 ft (1.8 m) in height.

10.16.3 The separation distance shall be allowed to be reduced where the AHJ determines that no hazard to the adjoining property exists.

10.16.4 Combustible material shall not be stored beneath a building or structure unless specifically constructed or protected for this purpose.

10.16.5 Combustible storage in the open shall not exceed 20 ft (6.1 m) in height.

10.17 Parade Floats.

10.17.1 Permits. Permits, where required, shall comply with Section 1.12.

10.17.2 Decorative Material. Decorative material on parade floats shall be noncombustible or flame retardant.

10.17.3 Fire Protection. Motorized parade floats and towing apparatus shall be provided with a minimum 2-A:10-B:C-rated portable fire extinguisher readily accessible to the operator.

10.18 Powered Industrial Trucks. Powered industrial trucks shall be operated and maintained in accordance with NFPA 505, *Fire Safety Standard for Powered Industrial Trucks Including Type Designations, Areas of Use, Conversions, Maintenance, and Operations.*

10.19* Combustible Materials.

10.19.1 General. Storage of combustible materials shall be orderly.

10.19.2 Permits. Permits, where required, shall comply with Section 1.12.

10.19.3 Ceiling Clearance.

10.19.3.1 Storage shall be maintained 2 ft (610 mm) or more from the ceiling in nonsprinklered areas of buildings.

10.19.3.2* The clearance between the deflector and the top of storage shall be 18 in. (457 mm) or greater. [**13:**8.6.6.1]

10.19.3.2.1 The clearance between the deflector and the top of storage shall be permitted to be less than 18 in. (46 cm) when permitted by NFPA 13.

10.19.3.3 Where other standards specify greater clearance to storage minimums, they shall be followed. [**13:**8.6.6.2]

10.19.4 Means of Egress. Combustible material shall not be stored in exits.

10.19.5 Equipment Rooms.

10.19.5.1 Combustible material shall not be stored in boiler rooms, mechanical rooms, or electrical equipment rooms.

10.19.5.2 Materials and supplies for the operation and maintenance of the equipment in the room shall be permitted.

10.19.6 Attic, Under-Floor, and Concealed Spaces. Attic, under-floor, and concealed spaces used for storage of combustible materials shall comply with the protection from hazards requirements for storage rooms in NFPA *101*.

10.19.7 Fueled Equipment. Fueled equipment, including but not limited to motorcycles, mopeds, lawn-care equipment, and portable cooking equipment, shall not be stored, operated, or repaired within a building except under one of the following conditions:

(1) The building or room has been constructed for such use in accordance with the building code.
(2) The use is allowed by other provisions of this *Code*.

Chapter 11 Building Services

11.1 Electrical Fire Safety.

11.1.1 Section 11.1 shall apply to new, existing, permanent, or temporary electrical appliances, equipment, fixtures, or wiring.

11.1.1.1 Existing installations shall be permitted to be continued in use provided the lack of conformity does not present an imminent hazard danger.

11.1.2 All electrical appliances, fixtures, equipment, or wiring shall be installed and maintained in accordance with NFPA 70, *National Electrical Code*.

11.1.3 Permanent wiring shall be installed and maintained in accordance with NFPA 70.

11.1.4 Permanent wiring abandoned in place shall be tagged or otherwise identified at its termination and junction points as "Abandoned in Place" or removed from all accessible areas and insulated from contact with other live electrical wiring or devices.

11.1.5 Extension cords shall not be used as a substitute for permanent wiring.

11.1.5.1 Multiplug Adapters. Multiplug adapters, such as multiplug extension cords, cube adapters, strip plugs, and other devices, shall be listed and used in accordance with their listing.

11.1.5.2 Relocatable Power Taps.

11.1.5.2.1 Relocatable power taps shall be of the polarized or grounded type with overcurrent protection and shall be listed.

11.1.5.2.2 The relocatable power taps shall be directly connected to a permanently installed receptacle.

11.1.5.2.3 Relocatable power tap cords shall not extend through walls, ceilings, or floors; under doors or floor coverings; or be subject to environmental or physical damage.

11.1.5.3 Extension Cords.

11.1.5.3.1 Extension cords shall be plugged directly into an approved receptacle, power tap, or multiplug adapter and shall, except for approved multiplug extension cords, serve only one portable appliance.

11.1.5.3.2 The ampacity of the extension cords shall not be less than the rated capacity of the portable appliance supplied by the cord.

11.1.5.3.3 The extension cords shall be maintained in good condition without splices, deterioration, or damage.

11.1.5.3.4 Extension cords shall be grounded when servicing grounded portable appliances.

11.1.5.3.5 Extension cords and flexible cords shall not be affixed to structures; extend through walls, ceilings, or floors, or under doors or floor coverings; or be subject to environmental or physical damage.

11.1.6 Temporary Wiring.

11.1.6.1 Other Articles. Except as specifically modified in Article 590, all other requirements of NFPA 70 for permanent wiring shall apply to temporary wiring installations. [**70:**590.2(A)]

11.1.6.2 Approval. Temporary wiring methods shall be acceptable only if approved based on the conditions of use and any special requirements of the temporary installation. [**70:**590.2(B)]

11.1.6.3 During the Period of Construction. Temporary electrical power and lighting installations shall be permitted during the period of construction, remodeling, maintenance, repair, or demolition of buildings, structures, equipment, or similar activities. [**70:**590.3(A)]

11.1.6.4 90 Days. Temporary electrical power and lighting installations shall be permitted for a period not to exceed 90 days for holiday decorative lighting and similar purposes. [**70:**590.3(B)]

11.1.6.5 Emergencies and Tests. Temporary electrical power and lighting installations shall be permitted during emergencies and for tests, experiments, and developmental work. [**70:**590.3(C)]

11.1.6.6 Removal. Temporary wiring shall be removed immediately upon completion of construction or purpose for which the wiring was installed. [**70:**590.3(D)]

11.1.7 Building Disconnect Access.

11.1.7.1* Means shall be provided for the fire department to disconnect the electrical service to a building, structure, or facility when the electrical installation is covered under the scope of NFPA 70.

11.1.7.2 The disconnecting means shall be maintained accessible to the fire department.

11.2 Heating, Ventilation, and Air-Conditioning.

11.2.1 Air-Conditioning, Heating, Ventilating Ductwork, and Related Equipment. Air-conditioning, heating, ventilating ductwork, and related equipment shall be in accordance with NFPA 90A, *Standard for the Installation of Air-Conditioning and Ventilating Systems*, or NFPA 90B, *Standard for the Installation of Warm Air Heating and Air-Conditioning Systems*, as applicable, unless such installations are approved existing installations, which shall be permitted to be continued in service. [***101***:9.2.1]

11.2.2 Ventilating or Heat-Producing Equipment. Ventilating or heat-producing equipment shall be in accordance with NFPA 91, *Standard for Exhaust Systems for Air Conveying of Vapors, Gases, Mists, and Noncombustible Particulate Solids*; NFPA 211, *Standard for Chimneys, Fireplaces, Vents, and Solid Fuel-Burning Appliances*; NFPA 31, *Standard for the Installation of Oil-Burning Equipment*; NFPA 54, *National Fuel Gas Code*; or NFPA 70, as applicable, unless such installations are approved existing installations, which shall be permitted to be continued in service. [***101***:9.2.2]

11.2.3 Commercial Cooking Equipment. Commercial cooking equipment shall be in accordance with Chapter 50, unless such installations are approved existing installations, which shall be permitted to be continued in service. [***101***:9.2.3]

11.2.4 Ventilating Systems in Laboratories Using Chemicals. Ventilating systems in laboratories using chemicals shall be installed in accordance with Chapter 26 and NFPA 45, *Standard on Fire Protection for Laboratories Using Chemicals*, or NFPA 99, *Standard for Health Care Facilities*, as appropriate. [***101***:9.2.4]

11.3 Elevators, Escalators, and Conveyors.

11.3.1 Fire Fighters' Emergency Operations.

11.3.1.1 All new elevators shall conform to the fire fighters' emergency operations requirements of ASME A17.1, *Safety Code for Elevators and Escalators.* [***101***:9.4.3.1]

11.3.1.2 All existing elevators having a travel distance of 25 ft (7620 mm) or more above or below the level that best serves the needs of emergency personnel for fire fighting or rescue purposes shall conform to the fire fighters' emergency operations requirements of ASME A17.3, *Safety Code for Existing Elevators and Escalators.* [***101***:9.4.3.2]

11.3.2 Number of Cars. The number of elevator cars permitted in a hoistway shall be in accordance with 8.6.8.3 of NFPA *101.* [***101***:9.4.4]

11.3.3* Elevator Machine Rooms. Elevator machine rooms that contain solid-state equipment for elevators, other than existing elevators, having a travel distance exceeding 50 ft (15 m) above the level of exit discharge or exceeding 30 ft (9150 mm) below the level of exit discharge shall be provided with independent ventilation or air-conditioning systems to maintain temperature during fire fighters' emergency operations for elevator operation *(see 11.3.1).* The operating temperature shall be established by the elevator equipment manufacturer's specifications. When standby power is connected to the elevator, the machine room ventilation or air-conditioning shall be connected to standby power. [***101***:9.4.5]

11.3.4 Elevator Testing. Elevators shall be subject to periodic inspections and tests as specified in ASME A17.1, *Safety Code for Elevators and Escalators.* All elevators equipped with fire fighters' emergency operations in accordance with 11.3.1 shall be subject to a monthly operation with a written record of the findings made and kept on the premises as required by ASME A17.1. [***101***:9.4.6]

11.3.5 Openings. Conveyors, elevators, dumbwaiters, and pneumatic conveyors serving various stories of a building shall not open to an exit. [***101***:9.4.7]

11.4 Utilities. Equipment using fuel gas and related gas piping shall be installed in accordance with NFPA 54, *National Fuel Gas Code*, or NFPA 58, *Liquefied Petroleum Gas Code. (See Chapter 69 for LP-Gas fuel supply and storage installations.)*

11.4.1 Existing installations shall be permitted to be continued in service, subject to approval by the AHJ.

11.4.2 Aboveground gas meters, regulators, and piping exposed to vehicular damage shall be protected in accordance with 60.1.2.13.

11.5 Heating Appliances.

11.5.1 General.

11.5.1.1 The installation of stationary oil-burning equipment and appliances including, but not limited to, industrial-, commercial-, and residential-type steam, hot water, or warm air heating plants; domestic-type range burners and space heaters; portable oil-burning equipment, and all accessory equipment and control systems, whether electric, thermostatic, or mechanical, and all electrical wiring connected to oil-fired equipment and to the installation of oil storage and supply systems connected to oil-fired equipment shall comply with Section 11.5 and NFPA 31, *Standard for the Installation of Oil-Burning Equipment.* [**31**:1.1.1]

11.5.1.2 Section 11.5 shall also apply to those multi-fueled appliances in which fuel oil is one of the optional fuels. [**31**:1.1.3]

11.5.1.3* Section 11.5 shall not apply to internal combustion engines, oil lamps, or portable devices not specifically covered in NFPA 31. *(See Chapter 11 of NFPA 31 for portable devices that are covered in this standard.)* [**31**:1.1.4]

11.5.1.4 The installation of gas-fired heating appliances shall comply with Section 11.5 and NFPA 54. *(See Chapter 69 for LP-Gas fuel supply and storage installations.)*

11.5.1.5 All heating appliances shall be approved or listed.

11.5.1.6 Permits. Permits, where required, shall comply with Section 1.12.

11.5.1.7 Electrical wiring and utilization equipment used in connection with oil-burning appliances or equipment shall be installed in accordance with Section 11.1. [**31**:4.4.1]

11.5.1.8 The grade of fuel oil used in an oil burner shall be that for which the burner is approved and as stipulated by the manufacturer. Crankcase oil, used oil, or oil containing gasoline shall not be used. *(For use of oil fuels other than those described in this paragraph, see Section 1.5 of NFPA 31.)*

*Exception: Where acceptable to the AHJ, an oil-burning appliance designed to burn crankcase oil or used oil shall be permitted to be used only in commercial or industrial occupancies. Oil-burning appliances intended for firing crankcase oils shall be listed for use with crankcase oils. (See Chapter 12 of NFPA 31 for appliances intended for firing used oil.) The appliances shall be installed in accordance with the manufacturers' instructions and with the terms of its listing. (See Section 4.6 of NFPA 31.) [**31**:4.5.1]*

11.5.1.9 Clothes Dryers.

11.5.1.9.1 Clothes dryers shall be cleaned to maintain the lint trap, and the mechanical and heating components free from excessive accumulations of lint.

11.5.1.9.2 The requirements of 11.5.1.9.1 shall not apply to clothes dryers in individual dwelling units of residential occupancies.

11.5.2 Kerosene Burners and Oil Stoves.

11.5.2.1 Kerosene burners and oil stoves shall be equipped with a primary safety control furnished as an integral part of the appliance by the manufacturer to stop the flow of oil in the event of flame failure. Barometric oil feed shall not be considered a primary safety control.

11.5.2.2 A conversion range oil burner shall be equipped with a thermal (heat-actuated) valve in the oil supply line, located in the burner compartment of the stove.

11.5.2.3 Only listed kerosene heaters shall be used. The following safeguards shall apply:

(1) Provide adequate ventilation
(2) Do not place on carpeting
(3) Keep 3 ft (0.9 m) away from combustible furnishings or drapes
(4) Use only approved Type 1-K water clear kerosene
(5) Allow to cool before refueling

11.5.3 Portable Electric Heater.

11.5.3.1 The AHJ shall be permitted to prohibit use of portable electric heaters in occupancies or situations where such use or operation would present an undue danger to life or property.

11.5.3.2 Portable electric heaters shall be designed and located so that they cannot be easily overturned.

11.5.3.3 All portable electric heaters shall be listed.

11.5.4 Vents. All chimneys, smokestacks, or similar devices for conveying smoke or hot gases to the outer air and the stoves, furnaces, incinerators, boilers, or any other heat-producing devices or appliances shall be installed and maintained in accordance with NFPA 54 and NFPA 211.

11.6 Rubbish Chutes, Incinerators, and Laundry Chutes.

11.6.1 Enclosure.

11.6.1.1 Rubbish chutes and laundry chutes shall be separately enclosed by walls or partitions in accordance with the provisions of Section 8.3 of NFPA *101*. [***101***:9.5.1.1]

11.6.1.2 Inlet openings serving chutes shall be protected in accordance with Section 8.3 of NFPA *101*. [***101***:9.5.1.2]

11.6.1.3 The doors of chutes specified in 11.6.1.2 shall open only to a room that is designed and used exclusively for accessing the chute opening. [***101***:9.5.1.3]

11.6.1.4 The room used for accessing the chute opening shall be separated from other spaces in accordance with Section 8.7 of NFPA *101*. [***101***:9.5.1.4]

11.6.1.5 The requirements of 11.6.1.1 through 11.6.1.4 shall not apply where otherwise permitted by the following:

(1) Existing installations having properly enclosed service chutes and properly installed and maintained service openings shall be permitted to have inlets open to a corridor or normally occupied space.
(2) Rubbish chutes and laundry chutes shall be permitted to open into rooms not exceeding 400 ft^2 (37 m^2) that are used for storage, provided that the room is protected by automatic sprinklers. [***101***:9.5.1.5]

11.6.2 Installation and Maintenance. Rubbish chutes, laundry chutes, and incinerators shall be installed and maintained in accordance with NFPA 82, *Standard on Incinerators and Waste and Linen Handling Systems and Equipment*, unless such installations are approved existing installations, which shall be permitted to be continued in service. [***101***:9.5.2]

11.7 Stationary Generators and Standby Power Systems.

11.7.1 Stationary Combustion Engines and Gas Turbines Installation. Stationary generator sets shall be installed in accordance with NFPA 37, *Standard for the Installation and Use of Stationary Combustion Engines and Gas Turbines*, and NFPA 70.

11.7.2 Emergency and Standby Power Systems.

11.7.2.1 General. Stationary generators for emergency use or standby power required by this *Code*, the building code, or other codes and standards shall be installed in accordance with NFPA 110, *Standard for Emergency and Standby Power Systems*.

11.7.2.2 Acceptance. Newly installed stationary generators for emergency use or for standby power for fire protection systems and features shall demonstrate the capacity of the energy converter, with its controls and accessories, to survive without damage from common and abnormal disturbances in actual load circuits by any of the following means:

(1) By tests on separate prototype models
(2) By acceptance tests on the system components as performed by the component suppliers
(3) By listing for emergency service as a completely factory-assembled and factory-tested apparatus

11.7.3 Stored Electrical Energy Emergency and Standby Power System Installation. Stored electrical energy systems required by this *Code*, the building code, or other NFPA codes and standards shall be installed in accordance with NFPA 111, *Standard on Stored Electrical Energy Emergency and Standby Power Systems*, and NFPA 70.

11.7.4 Maintenance and Testing.

11.7.4.1 Stationary generators used for standby power shall be tested and maintained in accordance with NFPA 110 and NFPA 37.

11.7.4.2 Stationary generators required by this *Code*, the building code, or other NFPA codes and standards shall be maintained in accordance with NFPA 110.

11.7.4.3 Stored electrical energy systems required by this *Code*, the building code, or other NFPA codes and standards shall be maintained in accordance with NFPA 111.

11.8* Smoke Control.

11.8.1 Newly installed smoke-control systems shall be inspected by the AHJ and tested in accordance with the criteria established in the approved design documents.

11.8.2 Smoke-control systems shall have an approved maintenance and testing program to ensure operational integrity.

11.8.3 All smoke-control systems and devices shall be maintained in a reliable operating condition and shall be replaced or repaired where defective.

11.8.4 The AHJ shall be notified when any smoke-control system is out of service for more than 4 hours in a 24-hour period and again upon restoration of service of such systems.

11.8.5 The AHJ shall be permitted to require the building to be evacuated or an approved fire watch to be provided for all portions left unprotected by the fire protection system shutdown until the fire protection system has been returned to service.

11.9 Emergency Command Center. Where required, emergency command centers shall comply with Section 11.9.

11.9.1 The location, design, and fire department access of the emergency command center shall be approved by the fire department.

11.9.2 The emergency command center shall be separated from the remainder of the building by a fire barrier having a fire resistance rating of not less than 1 hour.

11.9.3 The emergency command center room shall be a minimum of 96 ft^2 (8.9 m^2) with a minimum dimension of 8 ft (2.4 m).

11.9.4 The following shall be provided in the emergency command center:

(1) The fire department communication unit
(2) A telephone for fire department use with controlled access to the public telephone system
(3) Schematic building plans indicating the typical floor plan and detailing the building core means of egress, fire protection systems, fire-fighting equipment, and fire department access
(4) Work table

11.9.5 Where otherwise required, the following devices or functions shall be provided within the emergency command center:

(1) The emergency voice/alarm communication system unit
(2) Fire detection and alarm system annunciator unit
(3) Annunciator visually indicating the location of the elevators and whether they are operational
(4) Status indicators and controls for air-handling systems
(5) Controls for unlocking stairway doors simultaneously
(6) Sprinkler valve and waterflow detector display panels
(7) Emergency and standby power status indicators
(8) Fire pump status indicators
(9) Generator supervision devices and manual start and transfer features
(10) Public address system, where specifically required by other sections of this *Code*
(11) Controls required for smoke control

11.9.6 Emergency Command Center Acceptance Testing. Devices, equipment, components, and sequences shall be individually tested in accordance with appropriate standards and manufacturers' documented instructions.

Chapter 12 Features of Fire Protection

12.1 General. This chapter shall apply to new, existing, permanent, or temporary buildings.

12.2 Construction.

12.2.1* Where required by this *Code*, a type of building construction shall comply with NFPA 220, *Standard on Types of Building Construction.*

12.2.2 Fire safety construction features for new and existing occupancies shall comply with this *Code* and the referenced edition of NFPA *101.*

12.3 Fire-Resistant Assemblies.

12.3.1 The design and construction of fire walls and fire barrier walls that are required to separate buildings or subdivide a building to prevent the spread of fire shall comply with Section 12.3 and NFPA 221, *Standard for Fire Walls and Fire Barrier Walls.*

12.3.2* Maintenance of Fire-Resistive Construction.

12.3.2.1 Required fire-resistive construction, including fire barriers, fire walls, exterior walls due to location on property, fire-resistive requirements based on type of construction, draft-stop partitions, and roof coverings, shall be maintained and shall be properly repaired, restored, or replaced where damaged, altered, breached, penetrated, removed, or improperly installed.

12.3.2.2 Where required fire-rated gypsum wallboard walls or ceilings are damaged to the extent that through openings exist, the damaged gypsum wallboard shall be replaced or returned to the required level of fire resistance using a listed repair system or using materials and methods equivalent to the original construction.

12.4 Fire Doors and Windows.

12.4.1 The installation and maintenance of assemblies and devices used to protect openings in walls, floors, and ceilings against the spread of fire and smoke within, into, or out of buildings shall comply with Section 12.4 and NFPA 80, *Standard for Fire Doors and Fire Windows.* [**80:**1-1.1]

12.4.2 The fire performance evaluation of these assemblies shall be in accordance with NFPA 251, *Standard Methods of Tests of Fire Endurance of Building Construction and Materials,* for horizontal access doors; NFPA 252, *Standard Methods of Fire Tests of Door Assemblies,* for fire doors and shutters; and NFPA 257, *Standard on Fire Test for Window and Glass Block Assemblies,* for fire windows and glass block. [**80:**1-1.1]

12.4.3* Section 12.4 shall not apply to incinerator doors, record room doors, and vault doors. [**80:**1-1.2]

12.4.4 For requirements on the installation of hoistway doors for elevators and dumbwaiters, see the applicable sections of ASME A17.1, *Safety Code for Elevators and Escalators,* or CAN 35.B44, *Safety Code for Elevators.* Requirements for horizontally sliding, vertically sliding, and swinging doors as used in this *Code* do not apply to hoistway doors for elevators and dumbwaiters. [**80:**1-1.3]

12.4.5 Section 12.4 shall not cover fire-resistant glazing materials and horizontally sliding accordion or folding assemblies fabricated for use as walls and tested as wall assemblies in accordance with NFPA 251. The AHJ shall be consulted for the design and installation of such materials and assemblies. [**80:**1-1.4]

12.5 Interior Finish. Interior finish in buildings and structures shall meet the requirements of NFPA *101*, and this *Code*.

12.6 Furnishings, Contents, Decorations, and Treated Finishes. Furnishings, contents, decorations, and treated finishes in buildings and structures shall meet the requirements of NFPA *101*, and this *Code*.

12.7 Fire Barriers.

12.7.1 General. Fire barriers used to provide enclosure, subdivision, or protection under NFPA *101* and this *Code* shall be classified in accordance with one of the following fire resistance ratings:

(1) 3-hour fire resistance rating
(2) 2-hour fire resistance rating
(3) 1-hour fire resistance rating
(4)*½-hour fire resistance rating [***101***:8.3.1]

12.7.2 Walls.

12.7.2.1 The fire-resistive materials, assemblies, and systems used shall be limited to those permitted in this *Code* and this chapter. [***101***:8.3.2.1]

12.7.2.1.1* Fire resistance–rated glazing tested in accordance with NFPA 251 shall be permitted. [***101***:8.3.2.1.1]

12.7.2.1.2 New fire resistance–rated glazing shall bear the identifier "W-XXX" where "XXX" is the fire resistance rating in minutes. Such identification shall be permanently affixed. [***101***:8.3.2.1.2]

12.7.2.2 The construction materials and details for fire-resistive assemblies and systems for walls described shall comply with all other provisions of this *Code*, except as modified herein. [***101***:8.3.2.2]

12.7.2.3 Interior walls and partitions of nonsymmetrical construction shall be evaluated from both directions and assigned a fire resistance rating based on the shorter duration obtained in accordance with NFPA 251; ASTM E 119, *Standard Test Methods for Fire Tests of Building Construction and Materials*; or UL 263, *Standard for Fire Tests of Building Construction and Materials*. When the wall is tested with the least fire-resistive side exposed to the furnace, the wall shall not be required to be subjected to tests from the opposite side. [***101***:8.3.2.3]

12.7.3 Fire Doors and Windows.

12.7.3.1 Openings required to have a fire protection rating by Table 12.7.4.2 shall be protected by approved, listed, labeled fire door assemblies and fire window assemblies and their accompanying hardware, including all frames, closing devices, anchorage, and sills in accordance with the requirements of Section 12.4, except as otherwise specified in this *Code*. [***101***:8.3.3.1]

12.7.3.2* Fire protection ratings for products required to comply with 12.7.3 shall be as determined and reported by a nationally recognized testing agency in accordance with NFPA 252; ASTM E 2074, *Standard Test Method for Fire Tests of Door Assemblies, Including Positive Pressure Testing of Side-Hinged and Pivoted Swinging Door Assemblies*; UL 10B, *Standard for Fire Tests of Door Assemblies*; or UL 10C, *Standard for Positive Pressure Fire Tests of Door Assemblies*; or NFPA 257; ASTM E 2010, *Standard Test Method for Positive Pressure Fire Tests of Window Assemblies*; or UL 9, *Standard for Fire Tests of Window Assemblies*. [***101***:8.3.3.2]

12.7.3.2.1 Fire protection–rated glazing shall be evaluated under positive pressure in accordance with NFPA 257. [***101***:8.3.3.2.1]

12.7.3.2.2 All products required to comply with 12.7.3.2 shall bear an approved label. [***101***:8.3.3.2.2]

12.7.3.3 Unless otherwise specified, fire doors shall be self-closing or automatic-closing in accordance with 14.5.4. [***101***:8.3.3.3]

12.7.3.4 Floor fire door assemblies, shall be tested in accordance with NFPA 288, *Standard Methods of Fire Tests of Floor Fire Door Assemblies Installed Horizontally in Fire Resistance–Rated Floor Systems*, and shall achieve a fire resistance rating not less than the assembly being penetrated. Floor fire doors assemblies shall be listed and labeled. [***101***:8.3.3.4]

12.7.3.5 Fire protection–rated glazing shall be permitted in fire barriers having a required fire resistance rating of 1 hour or less and shall be of an approved type with the appropriate fire protection rating for the location in which the barriers are installed. [***101***:8.3.3.5]

12.7.3.6* Glazing in fire window assemblies, other than in existing fire window installations of wired glass and other fire-rated glazing material, shall be of a design that has been tested to meet the conditions of acceptance of NFPA 257; ASTM E 2010, *Standard Test Method for Positive Pressure Fire Tests of Window Assemblies*; or UL 9, *Standard for Fire Tests of Window Assemblies*. Fire protection–rated glazing in fire door assemblies, other than in existing fire-rated door assemblies, shall be of a design that has been tested to meet the conditions of acceptance of NFPA 252; ASTM E 2074, *Standard Test Method for Fire Tests of Door Assemblies, Including Positive Pressure Testing of Side-Hinged and Pivoted Swinging Door Assemblies*; UL 10B, *Standard for Fire Tests of Door Assemblies*; or UL 10C, *Standard for Positive Pressure Fire Tests of Door Assemblies*. [***101***:8.3.3.6]

12.7.3.7 Wired glass of ¼ in. (6 mm) in thickness and labeled for fire protection purposes shall be permitted to be used in approved opening protectives, provided the maximum size specified by the listing is not exceeded. Other glazing materials that have been tested and labeled to indicate the type of opening to be protected for fire protection purposes shall be permitted to be used in approved opening protectives in accordance with their listing, with the maximum sizes tested. [***101***:8.3.3.7]

12.7.3.8 Nonsymmetrical fire protection–rated glazing systems shall be tested with each face exposed to the furnace, and the assigned fire protection rating shall be that of the shortest duration obtained from the two tests conducted in compliance with NFPA 257; ASTM E 2010, *Standard Test Method for Positive Pressure Fire Tests of Window Assemblies*; or UL 9, *Standard for Fire Tests of Window Assemblies*. [***101***:8.3.3.8]

12.7.3.9 The total combined area of glazing in fire-rated window assemblies and fire-rated door assemblies used in fire barriers shall not exceed 25 percent of the area of the fire barrier that is common with any room, unless the installation meets one of the following criteria:

(1) The installation is an existing fire window installation of wired glass and other fire-rated glazing material in approved metal frames.
(2) The installation is an existing fire window installation of wired glass and other fire-rated glazing materials in approved frames.
(3) The fire protection–rated glazing material is installed in approved existing frames. [***101***:8.3.3.9]

12.7.3.10 Fire protection–rated glazing shall bear identification as described in 12.7.3.10.1 or 12.7.3.10.2 and shall be permanently affixed. [***101***:8.3.3.10]

12.7.3.10.1 Fire protection–rated glazing used in doors shall bear a four-part identification in the form of D — H (or NH) — T (or NT) — XXX with the component parts defined as follows:

(1) D, which indicates that the glazing is to be used in fire door assemblies and that the glazing meets the fire endurance requirements of the test standard
(2) H, which indicates that the glazing meets the hose stream requirements of the test standard
(3) NH, which indicates that the glazing does not meet the hose stream requirements of the test standard
(4) T, which indicates that the glazing has a maximum transmitted temperature endpoint of not more than 450°F (250°C) above ambient at the end of 30 minutes of standard fire test exposure
(5) NT, which indicates that the glazing does not have a temperature rise rating
(6) XXX, which is the placeholder that specifies the fire protection rating period, in minutes [***101***:8.3.3.10.1]

12.7.3.10.2 Fire protection–rated glazing used in fire resistance–rated walls and partitions shall bear the identification OH-XXX as follows:

(1) OH indicates that the glazing meets both the fire endurance and the hose stream requirements of NFPA 257; ASTM E 2010, *Standard Test Method for Positive Pressure Fire Tests of Window Assemblies*; or UL 9, *Standard for Fire Tests of Window Assemblies*; and is permitted to be used in openings.
(2) XXX indicates the fire protection rating period, in minutes, that was tested. [***101***:8.3.3.10.2]

12.7.4 Opening Protectives.

12.7.4.1 Every opening in a fire barrier shall be protected to limit the spread of fire and restrict the movement of smoke from one side of the fire barrier to the other. [***101***:8.3.4.1]

12.7.4.2* The fire protection rating for opening protectives in fire barriers, fire-rated smoke barriers, and fire-rated smoke partitions shall be in accordance with Table 12.7.4.2. [***101***:8.3.4.2]

12.7.4.3 Existing fire door assemblies having a ¾-hour fire protection rating shall be permitted to continue to be used in vertical openings and in exit enclosures in lieu of the 1-hour rating required by Table 12.7.4.2. [***101***:8.3.4.3]

12.7.4.4 Where a 20-minute fire protection–rated door is required in existing buildings, an existing 1¾ in. (44 mm) solid-bonded wood-core door, an existing steel-clad (tin-clad) wood door, or an existing solid-core steel door with positive latch and closer shall be permitted, unless otherwise specified by Chapter 11 through Chapter 42 of NFPA *101*. [***101***:8.3.4.4]

12.7.5 Penetrations. The provisions of 12.7.5 shall govern the materials and methods of construction used to protect through-penetrations and membrane penetrations in fire walls, fire barrier walls, and fire resistance–rated horizontal assemblies. The provisions of 12.7.5 shall not apply to approved existing materials and methods of construction used to protect existing through-penetrations and existing membrane penetrations in fire walls, fire barrier walls, or fire resistance–rated horizontal assemblies, unless otherwise required by Chapter 12 through Chapter 42 of NFPA *101*. [***101***:8.3.5]

Table 12.7.4.2 Minimum Fire Protection Ratings for Opening Protectives in Fire Resistance–Rated Assemblies

Component	Walls and Partitions (hr)	Fire Door Assemblies (hr)	Fire Window Assemblies (hr)
Elevator hoistways	2	1½	NP
	1	1	NP
Vertical shafts (including stairways, exits, and refuse chutes)	2	1½	NP
	1	1	NP
	½	⅓	NP
Fire barriers	3	3	NP
	2	1½	NP
	1	¾	¾
	½	⅓*	⅓
Horizontal exits	2	1½	NP
Exit access corridors*	1	⅓	¾
	½	⅓	⅓
Smoke barriers*	1	⅓	¾
Smoke partitions*,†	½	⅓	⅓

NP: Not permitted.
* Fire doors are not required to have a hose stream test per NFPA 252; ASTM E 2074, *Standard Test Method for Fire Tests of Door Assemblies, Including Positive Pressure Testing of Side-Hinged and Pivoted Swinging Door Assemblies*; UL 10B, *Standard for Fire Tests of Door Assemblies*; or UL 10C, *Standard for Positive Pressure Fire Tests of Door Assemblies*.
† For residential board and care, see 32.2.3.1 and 33.2.3.1 of NFPA *101*. [***101***:Table 8.3.4.2]

12.7.5.1* Firestop Systems and Devices Required. Penetrations for cables, cable trays, conduits, pipes, tubes, combustion vents and exhaust vents, wires, and similar items to accommodate electrical, mechanical, plumbing, and communications systems that pass through a wall, floor, or floor/ceiling assembly constructed as a fire barrier shall be protected by a firestop system or device. The firestop system or device shall be tested in accordance with ASTM E 814, *Standard Test Method for Fire Tests of Through Penetration Fire Stops*, or UL 1479, *Standard for Fire Tests of Through-Penetration Firestops*, at a minimum positive pressure differential of 0.01 in. water column (2.5 N/m^2) between the exposed and the unexposed surface of the test assembly. [***101***:8.3.5.1]

12.7.5.1.1 The requirements of 12.7.5.1 shall not apply where otherwise permitted by any one of the following:

(1) Where penetrations are tested and installed as part of an assembly tested and rated in accordance with NFPA 251; ASTM E 119, *Standard Test Methods for Fire Tests of Building Construction and Materials*; or UL 263, *Standard for Fire Tests of Building Construction and Materials*
(2) Where penetrations through floors are enclosed in a shaft enclosure designed as a fire barrier
(3) Where concrete, grout, or mortar has been used to fill the annular spaces around cast-iron, copper, or steel piping that penetrates one or more concrete or masonry fire

resistance–rated assemblies and both of the following criteria are also met:

(a) The nominal diameter of each penetrating item shall not exceed 6 in. (150 mm), and the opening size shall not exceed 1 ft^2 (0.09 m^2).
(b) The thickness of the concrete, grout, or mortar shall be the full thickness of the assembly.

(4) Where firestopping materials are used with the penetrating items in 12.7.5.1.1(1) through 12.7.5.1.1(3) and both of the following criteria are also met:

(a) The penetration shall be limited to only one floor.
(b) The firestopping material shall be capable of preventing the passage of flame and hot gases sufficient to ignite cotton waste when subjected to the time-temperature fire conditions of NFPA 251, ASTM E 119, or UL 263 under a minimum positive pressure differential of 0.01 in. water column (2.5 N/m^2) at the location of the penetration for the time period equivalent to the required fire resistance rating of the assembly penetrated. [*101*:8.3.5.1.1]

12.7.5.1.2 The maximum nominal diameter of the following penetrating items shall be not greater than 4 in. (100 mm), and the aggregate area of all penetrating items shall not exceed 0.7 ft^2 (0.06 m^2) in any 100 ft^2 (9.3 m^2) of floor or wall area:

(1) Steel, ferrous, or copper cables
(2) Cable or wire with steel jackets
(3) Cast-iron, steel, or copper pipes
(4) Steel conduit or tubing [*101*:8.3.5.1.2]

12.7.5.1.3 Firestop systems and devices shall have an F rating of at least 1 hour, but not less than the required fire-resistive rating of the fire barrier penetrated. [*101*:8.3.5.1.3]

12.7.5.1.4 Penetrations in fire-rated horizontal assemblies shall be required to have a T rating of at least 1 hour, but not less than the rating of the horizontal assembly, and shall not be required for the following:

(1) Floor penetrations contained within the cavity of a wall assembly
(2) Penetrations through floors or floor assemblies where the penetration is not in direct contact with combustible material [*101*:8.3.5.1.4]

12.7.5.2 Sleeves. Where the penetrating item uses a sleeve to penetrate the wall or floor, the sleeve shall be securely set in the wall or floor, and the space between the item and the sleeve shall be filled with a material that complies with 12.7.5.1. [*101*:8.3.5.2]

12.7.5.3 Insulation and Coverings. Insulation and coverings for penetrating items shall not pass through the wall or floor unless the insulation or covering has been tested as part of the firestop system or device. [*101*:8.3.5.3]

12.7.5.4 Transmission of Vibrations. Where designs take transmission of vibrations into consideration, any vibration isolation shall meet one of the following conditions:

(1) It shall be provided on either side of the wall or floor.
(2) It shall be designed for the specific purpose. [*101*:8.3.5.4]

12.7.5.5 Transitions.

12.7.5.5.1 Where piping penetrates a fire resistance–rated wall or floor assembly, combustible piping shall not connect to noncombustible piping within 36 in. (915 mm) of the firestop system or device without demonstration that the transition will not reduce the fire resistance rating, except in the case of previously approved installations. [*101*:8.3.5.5.1]

12.7.5.5.2 Unshielded couplings shall not be used to connect noncombustible piping to combustible piping unless it can be demonstrated that the transition complies with the fire-resistive requirements of 12.7.5.1. [*101*:8.3.5.5.2]

12.7.5.6 Membrane Penetrations.

12.7.5.6.1 Membrane penetrations for cables, cable trays, conduits, pipes, tubes, combustion vents and exhaust vents, wires, and similar items to accommodate electrical, mechanical, plumbing, and communications systems that pass through a membrane of a wall, floor, or floor/ceiling assembly constructed as a fire barrier shall be protected by a firestop system or device and shall comply with 12.7.5.1 through 12.7.5.5.2. [*101*:8.3.5.6.1]

12.7.5.6.2 The firestop system or device shall be tested in accordance with ASTM E 814, *Standard Test Method for Fire Tests of Through Penetration Fire Stops*, or UL 1479, *Standard for Fire Tests of Through-Penetration Firestops*, at a minimum positive pressure differential of 0.01 in. water column (2.5 N/m^2) between the exposed and the unexposed surface of the test assembly, unless one of the following applies:

(1) Membrane penetrations of ceilings that are not an integral part of a fire resistance–rated floor/ceiling or roof/ceiling assembly shall be permitted.
(2) Membrane penetrations of steel, ferrous, or copper conduits, pipes, tubes, or combustion vents or exhaust vents shall be permitted where the annular space is protected with an approved material, and the aggregate area of the openings does not exceed 0.7 ft^2 (0.06 m^2) in any 100 ft^2 (9.3 m^2) of ceiling area.
(3) Electrical outlet boxes and fittings shall be permitted, provided that such devices are listed for use in fire resistance–rated assemblies and are installed in accordance with their listing.
(4) The annular space created by the membrane penetration of a fire sprinkler shall be permitted, provided that the space is covered by a metal escutcheon plate. [*101*:8.3.5.6.2]

12.7.5.6.3 Where walls or partitions are required to have a fire resistance rating of not less than 1 hour, recessed fixtures shall be installed in the wall or partition in such a manner that the required fire resistance is not reduced, unless one of the following is met:

(1) Any steel electrical box not exceeding 0.1 ft^2 (0.01 m^2) shall be permitted where the aggregate area of the openings provided for the boxes does not exceed 0.7 ft^2 (0.06 m^2) in any 100 ft^2 (9.3 m^2) of wall area, and, where outlet boxes are installed on opposite sides of the wall, the boxes shall be separated by one of the following:

(a) Horizontal distance of not less than 24 in. (610 mm)
(b) Horizontal distance of not less than the depth of the wall cavity, where the wall cavity is filled with cellulose loose-fill, rock wool, or slag wool insulation
(c)*Solid fireblocking
(d) Other listed materials and methods

(2) Membrane penetrations for any listed electrical outlet box made of any material shall be permitted, provided that such boxes have been tested for use in fire resistance–rated assemblies and are installed in accordance with the instructions included in the listing.
(3) The annular space created by the membrane penetration of a fire sprinkler shall be permitted, provided that the space is covered by a metal escutcheon plate. [*101*:8.3.5.6.3]

12.7.5.7 Openings for Air-Handling Ductwork. Openings in fire barriers for air-handling ductwork or air movement shall be protected in accordance with 9.2.1 of NFPA *101*. [*101*:8.3.5.7]

12.7.5.8 Joints.

12.7.5.8.1 The provisions of 12.7.5.8 shall govern the materials and methods of construction used to protect joints in between and at the perimeter of fire barriers or, where fire barriers meet other fire barriers, the floor or roof deck above, or the outside walls. The provisions of 12.7.5.8 shall not apply to approved existing materials and methods of construction used to protect existing joints in fire barriers, unless otherwise required by Chapters 12 through 42 of NFPA *101*. [*101*:8.3.6.1]

12.7.5.8.2 Joints made within or at the perimeter of fire barriers shall be protected with a joint system that is capable of limiting the transfer of smoke. [*101*:8.3.6.2]

12.7.5.8.3 Joints made within or between fire barriers shall be protected with a smoke-tight joint system that is capable of limiting the transfer of smoke. [*101*:8.3.6.3]

12.7.5.8.4 Testing of the joint system in a fire barrier shall be representative of the actual installation suitable for the required engineering demand without compromising the fire resistance rating of the assembly or the structural integrity of the assembly. [*101*:8.3.6.4]

12.7.5.8.5 Joints made within or between fire resistance–rated assemblies shall be protected with a joint system that is designed and tested to prevent the spread of fire for a time period equal to that of the assembly in which the joint is located. Such materials, systems, or devices shall be tested as part of the assembly in accordance with the requirements of ASTM E 1966, *Standard Test Method for Fire-Resistive Joint Systems*, or UL 2079, *Standard for Tests for Fire Resistance of Building Joint Systems*. [*101*:8.3.6.5]

12.7.5.8.6 All joint systems shall be tested at their maximum joint width in accordance with the requirements of ASTM E 1966, *Standard Test Method for Fire-Resistive Joint Systems*, or UL 2079, under a minimum positive pressure differential of 0.01 in. water column (2.5 N/m^2) for a time period equal to that of the assembly. All test specimens shall comply with the minimum height or length required by the standard. Wall assemblies shall be subjected to a hose stream test in accordance with NFPA 251, ASTM E 119, or UL 263. [*101*:8.3.6.6]

12.8 Smoke Partitions.

12.8.1* General. Where required elsewhere in this *Code*, smoke partitions shall be provided to limit the transfer of smoke. [*101*:8.4.1]

12.8.2 Continuity. The following shall apply to smoke partitions:

(1) They shall extend from the floor to the underside of the floor or roof deck above, through any concealed spaces, such as those above suspended ceilings, and through interstitial structural and mechanical spaces.
(2) *They shall be permitted to extend from the floor to the underside of a monolithic or suspended ceiling system where the following conditions are met:
   (a) The ceiling system forms a continuous membrane.
   (b) A smoke-tight joint is provided between the top of the smoke partition and the bottom of the suspended ceiling.
   (c) The space above the ceiling is not used as a plenum.
(3) Smoke partitions enclosing hazardous areas shall be permitted to terminate at the underside of a monolithic or suspended ceiling system where the following conditions are met:
   (a) The ceiling system forms a continuous membrane.
   (b) A smoke-tight joint is provided between the top of the smoke partition and the bottom of the suspended ceiling.
   (c) Where the space above the ceiling is used as a plenum, return grilles from the hazardous area into the plenums are not permitted. [*101*:8.4.2]

12.8.3 Opening Protectives.

12.8.3.1 Doors in smoke partitions shall comply with 12.8.3.2 through 12.8.3.5. [*101*:8.4.3.1]

12.8.3.2 Doors shall comply with the provisions of 12.8.3.2. [*101*:8.4.3.2]

12.8.3.3 Doors shall not include louvers. [*101*:8.4.3.3]

12.8.3.4* Door clearances shall be in accordance with 12.4.1. [*101*:8.4.3.4]

12.8.3.5 Doors shall be self-closing or automatic-closing in accordance with 14.5.4. [*101*:8.4.3.5]

12.8.4 Penetrations. The provisions of 12.8.4 shall govern the materials and methods of construction used to protect through-penetrations and membrane penetrations of smoke partitions. [*101*:8.4.4]

12.8.4.1 Penetrations for cables, cable trays, conduits, pipes, tubes, vents, wires, and similar items to accommodate electrical, mechanical, plumbing, and communications systems that pass through a smoke partition shall be protected by a system or material that is capable of limiting the transfer of smoke. [*101*:8.4.4.1]

12.8.4.2 Where designs take transmission of vibrations into consideration, any vibration isolation shall meet one of the following conditions:

(1) It shall be provided on either side of the smoke partition.
(2) It shall be designed for the specific purpose. [*101*:8.4.4.2]

12.8.5 Joints.

12.8.5.1 The provisions of 12.8.5 shall govern the materials and methods of construction used to protect joints in between and at the perimeter of smoke partitions or, where smoke partitions meet other smoke partitions, the floor or roof deck above, or the outside walls. The provisions of 12.8.5 shall not apply to approved existing materials and methods of construction used to protect existing joints in smoke partitions, unless otherwise required by Chapter 12 through Chapter 42 of NFPA *101*. [*101*:8.4.5.1]

12.8.5.2 Joints made within or at the perimeter of smoke partitions shall be protected with a joint system that is capable of limiting the transfer of smoke. [*101*:8.4.5.2]

12.8.6 Air-Transfer Openings.

12.8.6.1 General. The provisions of 12.8.6 shall govern the materials and methods of construction used to protect air-transfer openings in smoke partitions. [*101*:8.4.6.1]

12.8.6.2* Smoke Dampers. Air-transfer openings in smoke partitions shall be provided with approved smoke dampers designed and tested in accordance with the requirements of UL 555S, *Standard for Smoke Dampers*, to limit the transfer of smoke. [*101*:8.4.6.2]

12.8.6.3 Smoke Damper Ratings. Smoke damper leakage ratings shall be not less than Class II. Elevated temperature ratings shall be not less than 250°F (140°C). [*101*:8.4.6.3]

12.8.6.4 Smoke Detectors. Dampers in air-transfer openings shall close upon detection of smoke by approved smoke detectors installed in accordance with *NFPA 72, National Fire Alarm Code.* [*101*:8.4.6.4]

12.9 Smoke Barriers.

12.9.1* General. Where required by Chapter 12 through Chapter 42 of NFPA *101*, smoke barriers shall be provided to subdivide building spaces for the purpose of restricting the movement of smoke. [*101*:8.5.1]

12.9.2* Continuity.

12.9.2.1 Smoke barriers required by this *Code* shall be continuous from an outside wall to an outside wall, from a floor to a floor, or from a smoke barrier to a smoke barrier, or by use of a combination thereof. [*101*:8.5.2.1]

12.9.2.2 Smoke barriers shall be continuous through all concealed spaces, such as those found above a ceiling, including interstitial spaces. [*101*:8.5.2.2]

12.9.2.3 A smoke barrier required for an occupied space below an interstitial space shall not be required to extend through the interstitial space, provided that the construction assembly forming the bottom of the interstitial space provides resistance to the passage of smoke equal to that provided by the smoke barrier. [*101*:8.5.2.3]

12.9.3 Fire Barrier Used as Smoke Barrier. A fire barrier shall be permitted to be used as a smoke barrier, provided that it meets the requirements of 12.9. [*101*:8.5.3]

12.9.4 Opening Protectives.

12.9.4.1* Doors in smoke barriers shall close the opening leaving only the minimum clearance necessary for proper operation and shall be without undercuts, louvers, or grilles. [*101*:8.5.4.1]

12.9.4.2 Where required by Chapter 12 through Chapter 42 of NFPA *101*, doors in smoke barriers shall comply with the requirements of 8.2.2.5 of NFPA *101*. [*101*:8.5.4.2]

12.9.4.3 Latching hardware shall not be required on doors in smoke barriers where permitted by Chapter 12 through Chapter 42 of NFPA *101*. [*101*:8.5.4.3]

12.9.4.4* Doors in smoke barriers shall be self-closing or automatic-closing in accordance with 14.5.4 and shall comply with the provisions of 12.7.3. [*101*:8.5.4.4]

12.9.4.5 Fire window assemblies shall comply with 8.3.3 of NFPA *101*. [*101*:8.5.4.5]

12.9.5 Ducts and Air-Transfer Openings.

12.9.5.1 General. The provisions of 12.9.5 shall govern the materials and methods of construction used to protect ducts and air-transfer openings in smoke barriers. [*101*:8.5.5.1]

12.9.5.2 Smoke Dampers. Where a smoke barrier is penetrated by a duct or air-transfer opening, a smoke damper designed and tested in accordance with the requirements of UL 555S shall be installed. Where a smoke barrier is also constructed as a fire barrier, a combination fire/smoke damper designed and tested in accordance with the requirements of UL 555 and UL 555S shall be installed. [*101*:8.5.5.2]

12.9.5.3 Smoke Damper Exemptions. Smoke dampers shall not be required under any of the following conditions:

(1) Where specifically exempted by provisions in Chapter 12 through Chapter 42 of NFPA *101*
(2) Where ducts or air-transfer openings are part of an engineered smoke control system
(3) Where the air in ducts continues to move and the air-handling system installed is arranged to prevent recirculation of exhaust or return air under fire emergency conditions
(4) Where the air inlet or outlet openings in ducts are limited to a single smoke compartment
(5) Where ducts penetrate floors that serve as smoke barriers [*101*:8.5.5.3]

12.9.5.4 Installation.

12.9.5.4.1 Air-conditioning, heating, ventilating ductwork, and related equipment, including smoke dampers and combination fire and smoke dampers, shall be installed in accordance with NFPA 90A, *Standard for the Installation of Air-Conditioning and Ventilating Systems.* [*101*:8.5.5.4.1]

12.9.5.4.2 The equipment specified in 12.9.5.4.1 shall be installed in accordance with the requirements of 12.9.5, the manufacturer's installation instructions, and the equipment listing. [*101*:8.5.5.4.2]

12.9.5.5 Access and Identification. Access to the dampers shall be provided for inspection, testing, and maintenance. The access openings shall not reduce the fire resistance rating of the fire barrier assembly. [*101*:8.5.5.5]

12.9.5.6 Smoke Damper Ratings. Smoke damper leakage ratings shall be not less than Class II. Elevated temperature ratings shall be not less than 250°F (140°C). [*101*:8.5.5.6]

12.9.5.7 Smoke Detectors.

12.9.5.7.1 Required smoke dampers in ducts penetrating smoke barriers shall close upon detection of smoke by approved smoke detectors in accordance with *NFPA 72*, unless one of the following conditions exists:

(1) The ducts penetrate smoke barriers above the smoke barrier doors, and the door release detector actuates the damper.
(2) Approved smoke detector installations are located within the ducts in existing installations. [*101*:8.5.5.7.1]

12.9.5.7.2 Where a duct is provided on one side of the smoke barrier, the smoke detectors on the duct side shall be in accordance with 12.9.5.7.1. [*101*:8.5.5.7.2]

12.9.5.7.3 Required smoke dampers in air-transfer openings shall close upon detection of smoke by approved smoke detectors in accordance with *NFPA 72*. [*101*:8.5.5.7.3]

12.9.6 Penetrations.

12.9.6.1 The provisions of 12.9.6 shall govern the materials and methods of construction used to protect through-penetrations and membrane penetrations of smoke barriers. [*101*:8.5.6.1]

12.9.6.2 Penetrations for cables, cable trays, conduits, pipes, tubes, vents, wires, and similar items to accommodate electrical, mechanical, plumbing, and communications systems that pass through a wall, floor, or floor/ceiling assembly constructed as a smoke barrier, or through the ceiling membrane of the roof/ceiling of a smoke barrier assembly, shall be protected by a system or material capable of restricting the transfer of smoke. [***101***:8.5.6.2]

12.9.6.3 Where a smoke barrier is also constructed as a fire barrier, the penetrations shall be protected in accordance with the requirements of Section 12.8 to limit the spread of fire for a time period equal to the fire resistance rating of the assembly and 12.9.6 to restrict the transfer of smoke, unless the requirements of 12.9.6.4 are met. [***101***:8.5.6.3]

12.9.6.4 Where sprinklers penetrate a single membrane of a fire resistance–rated assembly in buildings equipped throughout with an approved automatic fire sprinkler system, noncombustible escutcheon plates shall be permitted, provided that the space around each sprinkler penetration does not exceed ½ in. (13 mm), measured between the edge of the membrane and the sprinkler. [***101***:8.5.6.4]

12.9.6.5 Where the penetrating item uses a sleeve to penetrate the smoke barrier, the sleeve shall be securely set in the smoke barrier, and the space between the item and the sleeve shall be filled with a material capable of restricting the transfer of smoke. [***101***:8.5.6.5]

12.9.6.6 Where designs take transmission of vibrations into consideration, any vibration isolation shall meet one of the following conditions:

(1) It shall be provided on either side of the fire barrier.
(2) It shall be designed for the specific purpose. [***101***:8.5.6.6]

12.9.7 Joints.

12.9.7.1 The provisions of 12.9.7 shall govern the materials and methods of construction used to protect joints in between and at the perimeter of smoke barriers or, where smoke barriers meet other smoke barriers, the floor or roof deck above, or the outside walls. The provisions of 12.9.7 shall not apply to approved existing materials and methods of construction used to protect existing joints in smoke barriers, unless otherwise required by Chapter 12 through Chapter 42 of NFPA *101*. [***101***:8.5.7.1]

12.9.7.2 Joints made within or at the perimeter of smoke barriers shall be protected with a joint system that is capable of limiting the transfer of smoke. [***101***:8.5.7.2]

12.9.7.3 Joints made within or between smoke barriers shall be protected with a smoke-tight joint system that is capable of limiting the transfer of smoke. [***101***:8.5.7.3]

12.9.7.4 Smoke barriers that are also constructed as fire barriers shall be protected with a joint system that is designed and tested to resist the spread of fire for a time period equal to the required fire resistance rating of the assembly and restrict the transfer of smoke. [***101***:8.5.7.4]

12.9.7.5 Testing of the joint system in a smoke barrier that also serves as fire barrier shall be representative of the actual installation suitable for the required engineering demand without compromising the fire resistance rating of the assembly or the structural integrity of the assembly. [***101***:8.5.7.5]

Chapter 13 Fire Protection Systems

13.1 General.

13.1.1 The AHJ shall have the authority to require that construction documents for all fire protection systems be submitted for review and approval and a permit be issued prior to the installation, rehabilitation, or modification. *(For additional information concerning construction documents, see Section 1.14.)* Further, the AHJ shall have the authority to require that full acceptance tests of the systems be performed in the AHJ's presence prior to final system certification.

13.1.1.1 Permits. Permits, where required, shall comply with Section 1.12.

13.1.2 The property owner shall be responsible for the proper testing and maintenance of the equipment and systems.

13.1.3 Obstructions shall not be placed or kept near fire hydrants, fire department inlet connections, or fire protection system control valves in a manner that would prevent such equipment or fire hydrants from being immediately visible and accessible.

13.1.4 A minimum clear space shall be maintained to permit access to and operation of fire protection equipment, fire department inlet connections, or fire protection system control valves, as approved by the AHJ. The fire department shall not be deterred or hindered from gaining immediate access to fire protection equipment.

13.1.5 Detailed records documenting all systems and equipment testing and maintenance shall be kept by the property owner and shall be made available upon request for review by the AHJ.

13.1.6 Existing systems shall be in accordance with 1.3.6.2 and 10.3.2.

13.1.7 All fire protection systems and devices shall be maintained in a reliable operating condition and shall be replaced or repaired where defective.

13.1.8 The AHJ shall be notified when any fire protection system is out of service and on restoration of service.

13.1.9 When a fire protection system is out of service for more than 4 hours in a 24-hour period, the AHJ shall be permitted to require the building to be evacuated or an approved fire watch to be provided for all portions left unprotected by the fire protection system shutdown until the fire protection system has been returned to service.

13.1.10 In the event of a failure of a fire protection system or an excessive number of accidental activations, the AHJ shall be permitted to require an approved fire watch until the system is repaired.

13.1.11* For occupancies of an especially hazardous nature or where special hazards exist in addition to the normal hazard of the occupancy, or where access for fire apparatus is unduly difficult, or where the size or configuration of the building or contents limits normal fire suppression efforts, the AHJ shall have the authority to require additional safeguards consisting of additional fire safety equipment, more than one type of fire safety equipment, or special systems suitable for the protection of the hazard involved.

13.2 Standpipe Systems.

13.2.1 General. The design and installation of standpipe systems shall be in accordance with Section 13.2 and NFPA 14, *Standard for the Installation of Standpipe and Hose Systems.*

13.2.2 Where Required.

13.2.2.1 Where required by this *Code* or the referenced codes and standards listed in Chapter 2, standpipe systems shall be installed in accordance with 13.2.1.

13.2.2.2 New buildings shall be equipped with a Class I standpipe system installed in accordance with the provisions of Section 13.2 where any of the following conditions exist:

(1) More than three stories above grade
(2) More than 50 ft (15 m) above grade and containing intermediate stories or balconies
(3) More than one story below grade
(4) More than 20 ft (6.1 m) below grade

13.2.2.3 High-rise buildings shall be protected throughout by a Class I standpipe system in accordance with Section 13.2.2. [***101***:11.8.2.2]

13.2.2.4* In new assembly occupancies, regular stages over 1000 ft^2 (93 m^2) in area and all legitimate stages shall be equipped with 1½ in. (38 mm) hose lines for first aid fire fighting at each side of the stage. [***101***:12.4.5.12.1]

13.2.2.4.1 In existing assembly occupancies, stages over 1000 ft^2 (93 m^2) in area shall be equipped with 1½ in. (38 mm) hose lines for first aid fire fighting at each side of the stage. [***101***:13.4.5.12.1]

13.2.2.4.2 Hose connections shall be in accordance with NFPA 13, *Standard for the Installation of Sprinkler Systems,* unless Class II or Class III standpipes in accordance with NFPA 14 are used. [***101***:12.4.5.12.2; ***101***:13.4.5.12.2]

13.2.2.5 New and Existing Detention and Correctional Facilities. Standpipe and hose systems shall be provided in accordance with 9.7.4.2 of NFPA *101* as follows, unless otherwise permitted by 13.2.2.5.1:

(1) Class I standpipe systems shall be provided for any building over two stories in height.
(2) Class III standpipe and hose systems shall be provided for all nonsprinklered buildings over two stories in height. [***101***:22.3.5.5; ***101***:23.3.5.5]

13.2.2.5.1 The requirements of 13.2.2.5 shall not apply where otherwise permitted by the following:

(1) Formed hose, 1 in. (25 mm) in diameter, on hose reels shall be permitted to provide Class II service.
(2) Separate Class I and Class II systems shall be permitted in lieu of a Class III system. [***101***:22.3.5.6; ***101***:23.3.5.6]

13.2.3 Inspection, Testing, and Maintenance.

13.2.3.1 A standpipe system installed in accordance with this *Code* shall be properly maintained to provide at least the same level of performance and protection as designed.

13.2.3.2 The owner shall be responsible for maintaining the standpipe system and keeping it in good working condition.

13.2.3.3 A standpipe system installed in accordance with this *Code* shall be inspected, tested, and maintained in accordance with NFPA 25, *Standard for the Inspection, Testing, and Maintenance of Water-Based Fire Protection Systems.*

13.2.3.4 Existing Systems. Where an existing standpipe system, including yard piping and fire department connection, is modified, the new piping shall be tested in accordance with 11.4.1 of NFPA 14. [**14**:11.4.7]

13.3 Automatic Sprinklers.

13.3.1 General.

13.3.1.1* Automatic sprinklers shall be installed and maintained in full operating condition in the occupancies specified in this *Code* or in the codes or standards referenced in Chapter 2.

13.3.1.2 Installations shall be in accordance with NFPA 13, *Standard for the Installation of Sprinkler Systems*; NFPA 13R, *Standard for the Installation of Sprinkler Systems in Residential Occupancies up to and Including Four Stories in Height*; or NFPA 13D, *Standard for the Installation of Sprinkler Systems in One- and Two-Family Dwellings and Manufactured Homes,* as appropriate.

13.3.1.3 Existing systems shall be in accordance with 1.3.6.2 and 10.3.2.

13.3.1.4 Sprinkler piping serving not more than six sprinklers for any isolated hazardous area shall be permitted to be connected directly to a domestic water supply system having a capacity sufficient to provide 0.15 gpm/ft^2 (6.1 mm/min) throughout the entire enclosed area. An indicating shutoff valve, supervised in accordance with13.3.1.7 or NFPA 13, shall be installed in an accessible, visible location between the sprinklers and the connection to the domestic water supply. [***101***:9.7.1.2]

13.3.1.5* In areas protected by automatic sprinklers, automatic heat-detection devices required by other sections of this *Code* shall not be required. [***101***:9.7.1.3]

13.3.1.6 Automatic sprinkler systems installed to make use of an alternative permitted by this *Code* shall be considered required systems and shall meet the provisions of this *Code* that apply to required systems. [***101***:9.7.1.4]

13.3.1.7 Supervision.

13.3.1.7.1* Supervisory Signals. Where supervised automatic sprinkler systems are required by another section of this *Code,* supervisory attachments shall be installed and monitored for integrity in accordance with *NFPA 72,* and a distinctive supervisory signal shall be provided to indicate a condition that would impair the satisfactory operation of the sprinkler system. System components and parameters that shall be monitored shall include, but shall not be limited to, control valves, fire pump power supplies and running conditions, water tank levels and temperatures, tank pressure, and air pressure on dry-pipe valves. Supervisory signals shall sound and shall be displayed either at a location within the protected building that is constantly attended by qualified personnel or at an approved, remotely located receiving facility. [***101***:9.7.2.1]

13.3.1.7.2 Alarm Signal Transmission. Where supervision of automatic sprinkler systems is provided in accordance with another provision of this *Code,* waterflow alarms shall be transmitted to an approved, proprietary alarm-receiving facility, a remote station, a central station, or the fire department. Such connection shall be in accordance with 13.7.1.4. [***101***:9.7.2.2]

13.3.1.8 The following practices shall be observed to provide sprinklers of other than ordinary-temperature classification unless other temperatures are determined or unless

high-temperature sprinklers are used throughout and temperature selection shall be in accordance with Table 13.3.1.8(a), Table 13.3.1.8(b), and Figure 13.3.1.8:

(1) Sprinklers in the high-temperature zone shall be of the high-temperature classification, and sprinklers in the intermediate-temperature zone shall be of the intermediate-temperature classification.
(2) Sprinklers located within 12 in. (305 mm) to one side or 30 in. (762 mm) above an uncovered steam main, heating coil, or radiator shall be of the intermediate-temperature classification.
(3) Sprinklers within 7 ft (2.1 m) of a low-pressure blowoff valve that discharges free in a large room shall be of the high-temperature classification.
(4) Sprinklers under glass or plastic skylights exposed to the direct rays of the sun shall be of the intermediate-temperature classification.
(5) Sprinklers in an unventilated, concealed space, under an uninsulated roof, or in an unventilated attic shall be of the intermediate-temperature classification.
(6) Sprinklers in unventilated show windows having high-powered electric lights near the ceiling shall be of the intermediate-temperature classification.
(7) Sprinklers protecting commercial-type cooking equipment and ventilation systems shall be of the high- or extra high–temperature classification as determined by use of a temperature-measuring device. *(See 7.9.6 of NFPA 13.)*
(8) Sprinklers protecting residential areas installed near specific heat sources identified in Table 13.3.1.8(c) shall be installed in accordance with Table 13.3.1.8(c). [**13:**8.3.2.5]

13.3.2 Where Required.

13.3.2.1 Where required by this *Code* or the referenced codes and standards listed in Chapter 2, automatic sprinkler systems shall be installed in accordance with 13.3.1.

13.3.2.2 Basements exceeding 2500 ft^2 (232 m^2) in new buildings shall be protected throughout by an approved automatic sprinkler system.

13.3.2.3 New buildings housing emergency fire, rescue, or ambulance services shall be protected throughout by approved automatic sprinkler systems.

13.3.2.4* Exterior Roofs and Canopies. In buildings protected by automatic sprinklers, automatic sprinkler protection shall be provided for the exterior spaces in accordance with 13.3.2.4.

13.3.2.4.1* Unless the requirements of 13.3.2.4.2 or 13.3.2.4.3 are met, sprinklers shall be installed under exterior roof or canopies exceeding 4 ft (1.2 m) in width. [**13:**8.14.7.1]

13.3.2.4.2 Sprinklers shall be permitted to be omitted where the canopy or roof is of noncombustible or limited combustible construction. [**13:**8.14.7.2]

13.3.2.4.3 Sprinklers shall be permitted to be omitted from exterior exit corridors when the exterior walls of the corridor are at least 50 percent open and when the corridor is entirely of noncombustible construction. [**13:**8.14.7.3]

13.3.2.4.4* Sprinklers shall be installed under roofs or canopies over areas where combustibles are stored or handled. [**13:**8.14.7.4]

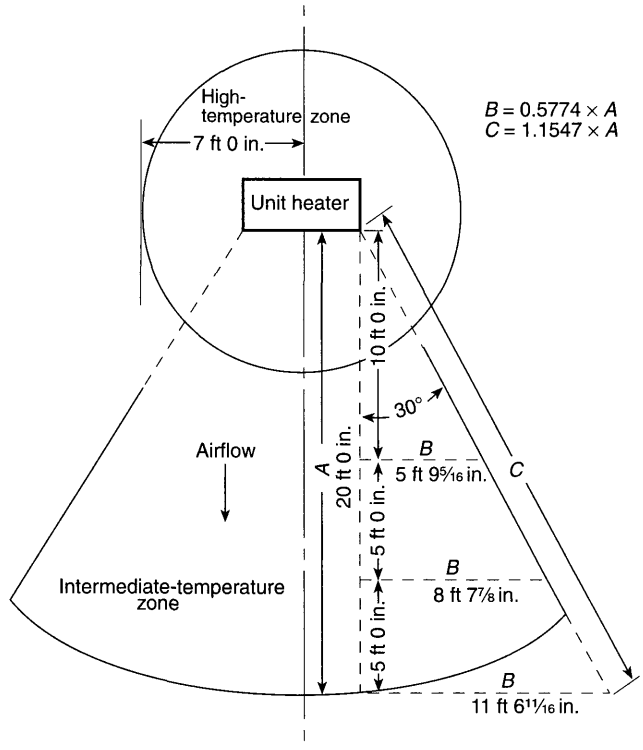

SI units: 1 in. = 25.4 mm; 1 ft = 0.31 m.

FIGURE 13.3.1.8 High-Temperature and Intermediate-Temperature Zones at Unit Heaters. [13:Figure 8.3.2.5]

13.3.2.5 New Assembly Occupancies.

13.3.2.5.1 The following assembly occupancies shall be protected throughout by an approved, supervised automatic sprinkler system in accordance with NFPA 13:

(1) Bars with live entertainment
(2) Dance halls
(3) Discotheques
(4) Nightclubs
(5) Assembly occupancies with festival seating [***101:***12.3.5.1]

13.3.2.5.2 Buildings containing assembly occupancies with occupant loads of more than 300 shall be protected by an approved, supervised automatic sprinkler system in accordance with Section 13.3 of this *Code* as follows *(see also 12.1.6, 12.2.6, 12.3.2, and 12.3.6 of NFPA 101):*

(1) Throughout the story containing the assembly occupancy
(2) Throughout all stories below the story containing the assembly occupancy
(3) In the case of an assembly occupancy located below the level of exit discharge, throughout all stories intervening between that story and the level of exit discharge, including the level of exit discharge [***101:***12.3.5.2]

13.3.2.5.3 The requirements of 13.3.2.5.2 shall not apply to the following:

(1)*Assembly occupancies consisting of a single multipurpose room of less than 12,000 ft^2 (1115 m^2) that are not used for exhibition or display and are not part of a mixed occupancy

Table 13.3.1.8(a) Temperature Ratings of Sprinklers Based on Distance from Heat Sources

Type of Heat Condition	Ordinary Degree Rating	Intermediate Degree Rating	High Degree Rating
(1) Heating ducts			
(a) Above	More than 2 ft 6 in.	2 ft 6 in. or less	
(b) Side and below	More than 1 ft 0 in.	1 ft 0 in. or less	
(c) Diffuser	Any distance except as shown under Intermediate Degree Rating column	*Downward discharge:* Cylinder with 1 ft 0 in. radius from edge extending 1 ft 0 in. below and 2 ft 6 in. above *Horizontal discharge:* Semicylinder with 2 ft 6 in. radius in direction of flow extending 1 ft 0 in. below and 2 ft 6 in. above	
(2) Unit heater			
(a) Horizontal discharge		*Discharge side:* 7 ft 0 in. to 20 ft 0 in. radius pie-shaped cylinder *(see Figure 13.3.1.8)* extending 7 ft 0 in. above and 2 ft 0 in. below heater; also 7 ft 0 in. radius cylinder more than 7 ft 0 in. above unit heater	7 ft 0 in. radius cylinder extending 7 ft 0 in. above and 2 ft 0 in. below unit heater
(b) Vertical downward discharge *(for sprinklers below unit heater, see Figure 13.3.1.8)*		7 ft 0 in. radius cylinder extending upward from an elevation 7 ft 0 in. above unit heater	7 ft 0 in. radius cylinder extending from the top of the unit heater to an elevation 7 ft 0 in. above unit heater
(3) Steam mains (uncovered)			
(a) Above	More than 2 ft 6 in.	2 ft 6 in. or less	
(b) Side and below	More than 1 ft 0 in.	1 ft 0 in. or less	
(c) Blowoff valve	More than 7 ft 0 in.		7 ft 0 in. or less

For SI units, 1 in. = 25.4 mm; 1 ft = 0.3048 m.
[**13**:Table 8.3.2.5(a)]

Table 13.3.1.8(b) Ratings of Sprinklers in Specified Locations

Location	Ordinary Degree Rating	Intermediate Degree Rating	High Degree Rating
Skylights		Glass or plastic	
Attics	Ventilated	Unventilated	
Peaked roof: metal or thin boards, concealed or not concealed, insulated or uninsulated	Ventilated	Unventilated	
Flat roof: metal, not concealed	Ventilated or unventilated	Note: For uninsulated roof, climate and insulated or uninsulated occupancy can necessitate intermediate sprinklers. Check on job.	
Flat roof: metal, concealed, insulated or uninsulated	Ventilated	Unventilated	
Show windows	Ventilated	Unventilated	

Note: A check of job condition by means of thermometers might be necessary.
[**13**:Table 8.3.2.5(b)]

Table 13.3.1.8(c) Ratings of Sprinklers in Specified Residential Areas

Heat Source	Minimum Distance from Edge of Source to Ordinary-Temperature Sprinkler		Minimum Distance from Edge of Source to Intermediate-Temperature Sprinkler	
	in.	mm	in.	mm
Side of open or recessed fireplace	36	914	12	305
Front of recessed fireplace	60	1524	36	914
Coal- or wood-burning stove	42	1067	12	305
Kitchen range	18	457	9	229
Wall oven	18	457	9	229
Hot air flues	18	457	9	229
Uninsulated heat ducts	18	457	9	229
Uninsulated hot water pipes	12	305	6	152
Side of ceiling- or wall-mounted hot air diffusers	24	607	12	305
Front of wall-mounted hot air diffusers	36	914	18	457
Hot water heater or furnace	6	152	3	76
Light fixture:				
0 W–250 W	6	152	3	76
250 W–499 W	12	305	6	152

[**13**:Table 8.3.2.5(c)]

(2) Gymnasiums, skating rinks, and swimming pools used exclusively for participant sports with no audience facilities for more than 300 persons
(3) Locations in stadia and arenas as follows:
  (a) Over the floor area used for contest, performance, or entertainment
  (b) Over the seating areas
  (c) Over open-air concourses where an approved engineering analysis substantiates the ineffectiveness of the sprinkler protection due to building height and combustible loading
(4) Locations in unenclosed stadia and arenas as follows:
  (a) Press boxes of less than 1000 ft^2 (93 m^2)
  (b) Storage facilities of less than 1000 ft^2 (93 m^2) if enclosed with not less than 1-hour fire resistance–rated construction
  (c) Enclosed areas underneath grandstands that comply with 25.3.4 [***101***:12.3.5.3]

13.3.2.5.4 Where another provision of Chapter 12 of NFPA *101* requires an automatic sprinkler system, the sprinkler system shall be installed in accordance with NFPA 13. [***101***:12.3.5.4]

13.3.2.5.5 Fire Protection. Every stage shall be protected by an approved, supervised automatic sprinkler system in compliance with Section 13.3. [***101***:12.4.5.10]

13.3.2.5.5.1 Protection shall be provided throughout the stage and in storerooms, workshops, permanent dressing rooms, and other accessory spaces contiguous to stages. [***101***:12.4.5.10.1]

13.3.2.5.5.2 Sprinklers shall not be required for stages 1000 ft^2 (93 m^2) or less in area and 50 ft (15 m) or less in height where the following criteria are met:

(1) Curtains, scenery, or other combustible hangings are not retractable vertically.
(2) Combustible hangings are limited to borders, legs, a single main curtain, and a single backdrop. [***101***:12.4.5.10.2]

13.3.2.5.5.3 Sprinklers shall not be required under stage areas less than 48 in. (1220 mm) in clear height that are used exclusively for chair or table storage and lined on the inside with ⅝ in. (16 mm) Type X gypsum wallboard or the approved equivalent. [***101***:12.4.5.10.3]

13.3.2.6 Existing Assembly Occupancies.

13.3.2.6.1 Where the occupant load exceeds 100, the following assembly occupancies shall be protected throughout by an approved, supervised automatic sprinkler system in accordance with NFPA 13:

(1) Bars with live entertainment
(2) Dance halls
(3) Discotheques
(4) Nightclubs
(5) Assembly occupancies with festival seating [***101***:13.3.5.1]

13.3.2.6.2 Any assembly occupancy used or capable of being used for exhibition or display purposes shall be protected throughout by an approved automatic sprinkler system in accordance with Section 13.3 where the exhibition or display area exceeds 15,000 ft^2 (1400 m^2). [***101***:13.3.5.2]

13.3.2.6.3 The sprinklers specified by 13.3.2.6.2 shall not be required where otherwise permitted in the following locations:

(1) Locations in stadia and arenas as follows:
  (a) Over the floor area used for contest, performance, or entertainment

(b) Over the seating areas
(c) Over open-air concourses where an approved engineering analysis substantiates the ineffectiveness of the sprinkler protection due to building height and combustible loading

(2) Locations in unenclosed stadia and arenas as follows:
(a) Press boxes of less than 1000 ft^2 (93 m^2)
(b) Storage facilities of less than 1000 ft^2 (93 m^2) if enclosed with not less than 1-hour fire resistance–rated construction
(c) Enclosed areas underneath grandstands that comply with 25.3.4 [*101*:13.3.5.3]

13.3.2.6.4 Where another provision of this chapter and Chapter 13 of NFPA *101* requires an automatic sprinkler system, the sprinkler system shall be installed in accordance with NFPA 13. [*101*:13.3.5.4]

13.3.2.6.5 Fire Protection. Every stage shall be protected by an approved automatic sprinkler system in compliance with Section 13.3. [*101*:13.4.5.10]

13.3.2.6.5.1 Protection shall be provided throughout the stage and in storerooms, workshops, permanent dressing rooms, and other accessory spaces contiguous to such stages. [*101*:13.4.5.10.1]

13.3.2.6.5.2 Sprinklers shall not be required for stages 1000 ft^2 (93 m^2) or less in area where the following criteria are met:

(1) Curtains, scenery, or other combustible hangings are not retractable vertically.
(2) Combustible hangings are limited to borders, legs, a single main curtain, and a single backdrop. [*101*:13.4.5.10.2]

13.3.2.6.5.3 Sprinklers shall not be required under stage areas less than 48 in. (1220 mm) in clear height that are used exclusively for chair or table storage and lined on the inside with ⅝ in. (16 mm) Type X gypsum wallboard or the approved equivalent. [*101*:13.4.5.10.3]

13.3.2.7 New Educational Occupancies.

13.3.2.7.1 Every portion of educational buildings below the level of exit discharge shall be protected throughout by an approved, supervised automatic sprinkler system in accordance with Section 13.3. [*101*:14.3.5.1]

13.3.2.7.2 Buildings with unprotected openings in accordance with 8.6.6 of NFPA *101* shall be protected throughout by an approved, supervised automatic sprinkler system in accordance with Section 13.3. [*101*:14.3.5.4]

13.3.2.7.3 Where another provision of Chapter 14 of NFPA *101* requires an automatic sprinkler system, the sprinkler system shall be installed in accordance with NFPA 13. [*101*:14.3.5.5]

13.3.2.8 Existing Educational Occupancies.

13.3.2.8.1 Where student occupancy exists below the level of exit discharge, every portion of such floor shall be protected throughout by an approved automatic sprinkler system in accordance with Section 13.3. [*101*:15.3.5.1]

13.3.2.8.2 Where student occupancy does not exist on floors below the level of exit discharge, such floors shall be separated from the rest of the building by 1-hour fire resistance–rated construction or shall be protected throughout by an approved automatic sprinkler system in accordance with Section 13.3. [*101*:15.3.5.2]

13.3.2.8.3 Automatic sprinkler protection shall not be required where student occupancy exists below the level of exit discharge, provided that both of the following criteria are met:

(1) The approval of the AHJ shall be required.
(2) Windows for rescue and ventilation shall be provided in accordance with 15.2.11.1 of NFPA *101*. [*101*:15.3.5.3]

13.3.2.8.4 Buildings with unprotected openings in accordance with 8.6.6 of NFPA *101* shall be protected throughout by an approved, supervised automatic sprinkler system in accordance with Section 13.3. [*101*:15.3.5.4]

13.3.2.8.5 Where another provision of Chapter 15 of NFPA *101* requires an automatic sprinkler system, the sprinkler system shall be installed in accordance with NFPA 13. [*101*:15.3.5.5]

13.3.2.9 New Health Care Occupancies.

13.3.2.9.1* Buildings containing health care occupancies shall be protected throughout by an approved, supervised automatic sprinkler system in accordance with Section 13.3, unless otherwise permitted by 13.3.2.9.3. [*101*:18.3.5.1]

13.3.2.9.2 The sprinkler system required by 13.3.2.9.1 shall be installed in accordance with NFPA 13. [*101*:18.3.5.3]

13.3.2.9.3 In Type I and Type II construction, alternative protection measures shall be permitted to be substituted for sprinkler protection, without causing a building to be classified as nonsprinklered, in specified areas where the AHJ has prohibited sprinklers. [*101*:18.3.5.4]

13.3.2.9.4* Listed quick-response or listed residential sprinklers shall be used throughout smoke compartments containing patient sleeping rooms. [*101*:18.3.5.5]

13.3.2.9.5* Sprinklers in areas where cubicle curtains are installed shall be in accordance with NFPA 13. [*101*:18.3.5.9]

13.3.2.10 Existing Health Care Occupancies.

13.3.2.10.1 Buildings containing nursing homes shall be protected throughout by an approved, supervised automatic sprinkler system in accordance with Section 13.3 and Section 9.7 of NFPA *101*, unless otherwise permitted by 13.3.2.10.4. [*101*:19.3.5.1]

13.3.2.10.2 Where required by 19.1.6 of NFPA *101*, buildings containing hospitals or limited care facilities shall be protected throughout by an approved, supervised automatic sprinkler system in accordance with Section 13.3 and Section 9.7 of NFPA *101*, unless otherwise permitted by 13.3.2.10.4. [*101*:19.3.5.2]

13.3.2.10.3* The sprinkler system required by 13.3.2.10.1 or 13.3.2.10.2 shall be installed in accordance with NFPA 13. [*101*:19.3.5.3]

13.3.2.10.4 In Type I and Type II construction, alternative protection measures shall be permitted to be substituted for sprinkler protection, without causing a building to be classified as nonsprinklered, in specified areas where the AHJ has prohibited sprinklers. [*101*:19.3.5.4]

13.3.2.10.5* Where this *Code* permits exceptions for fully sprinklered buildings or smoke compartments, the sprinkler system shall meet the following criteria:

(1) It shall be in accordance with Section 13.3.
(2) It shall be installed in accordance with NFPA 13, unless it is an approved existing system.

(3) It shall be electrically connected to the fire alarm system.
(4) It shall be fully supervised.
(5) In Type I and Type II construction, where the AHJ has prohibited sprinklers, approved alternative protection measures shall be permitted to be substituted for sprinkler protection in specified areas without causing a building to be classified as nonsprinklered. [*101*:19.3.5.6]

13.3.2.10.6* Where this *Code* permits exceptions for fully sprinklered buildings or smoke compartments and specifically references this paragraph, the sprinkler system shall meet the following criteria:

(1) It shall be installed throughout the building or smoke compartment in accordance with Section 13.3.
(2) It shall be installed in accordance with NFPA 13, unless it is an approved existing system.
(3) It shall be electrically connected to the fire alarm system.
(4) It shall be fully supervised.
(5) It shall be equipped with listed quick-response or listed residential sprinklers throughout all smoke compartments containing patient sleeping rooms.
(6) Standard-response sprinklers shall be permitted to be continued to be used in approved existing sprinkler systems where quick-response and residential sprinklers were not listed for use in such locations at the time of installation.
(7) Standard-response sprinklers shall be permitted for use in hazardous areas protected in accordance with 19.3.2.1 of NFPA *101*. [*101*:19.3.5.7]

13.3.2.10.7 Isolated hazardous areas shall be permitted to be protected in accordance with 13.3.1.4. For new installations in existing health care occupancies, where more than two sprinklers are installed in a single area, waterflow detection shall be provided to sound the building fire alarm or to notify, by a signal, any constantly attended location, such as PBX, security, or emergency room, at which the necessary corrective action shall be taken. [*101*:19.3.5.8]

13.3.2.10.8* Newly introduced cubicle curtains in sprinklered areas shall be installed in accordance with NFPA 13. [*101*:19.3.5.9]

13.3.2.11 New Detention and Correctional Facilities.

13.3.2.11.1 All buildings classified as Use Condition II, Use Condition III, Use Condition IV, or Use Condition V shall be protected throughout by an approved, supervised automatic sprinkler system in accordance with 13.3.2.11.2. [*101*:22.3.5.2]

13.3.2.11.2 The automatic sprinkler system required by 13.3.2.11.1 shall be as follows:

(1) In accordance with Section 13.3
(2) Installed in accordance with NFPA 13
(3) Electrically connected to the fire alarm system
(4) Fully supervised [*101*:22.3.5.3]

13.3.2.12 Existing Detention and Correctional Facilities.

13.3.2.12.1* Where required by Table 23.1.6.5 of NFPA *101*, facilities shall be protected throughout by an approved, supervised automatic sprinkler system in accordance with 13.3.2.12.2. [*101*:23.3.5.2]

13.3.2.12.2 Where this *Code* permits exceptions for fully sprinklered detention and correctional occupancies or sprinklered smoke compartments, the sprinkler system shall be as follows:

(1) In accordance with Section 13.3
(2) Installed in accordance with NFPA 13
(3) Electrically connected to the fire alarm system
(4) Fully supervised [*101*:23.3.5.3]

13.3.2.13 New Hotels and Dormitories.

13.3.2.13.1 All buildings, other than those complying with 13.3.2.13.2, shall be protected throughout by an approved, supervised automatic sprinkler system in accordance with 13.3.2.13.3. [*101*:28.3.5.1]

13.3.2.13.2 Automatic sprinkler protection shall not be required in buildings where all guest sleeping rooms or guest suites have a door opening directly to either of the following:

(1) Outside at the street or grade level
(2) Exterior exit access arranged in accordance with 7.5.3 of NFPA *101* in buildings up to and including three stories in height above grade [*101*:28.3.5.2]

13.3.2.13.3 Where an automatic sprinkler system is installed, either for total or partial building coverage, the system shall be in accordance with Section 13.3, as modified by 13.3.2.13.4; in buildings up to and including four stories in height above grade, systems in accordance with NFPA 13R shall be permitted. [*101*:28.3.5.3]

13.3.2.13.4 The provisions for draft stops and closely spaced sprinklers in NFPA 13 shall not be required for openings complying with 8.6.8.2 of NFPA *101* where the opening is within the guest room or guest suite. [*101*:28.3.5.4]

13.3.2.13.5 Listed quick-response or listed residential sprinklers shall be used throughout guest rooms and guest room suites. [*101*:28.3.5.6]

13.3.2.13.6 Open parking structures that comply with NFPA 88A, *Standard for Parking Structures*, and are contiguous with hotels or dormitories shall be exempt from the sprinkler requirements of 13.3.2.13.1. [*101*:28.3.5.7]

13.3.2.14 Existing Hotels and Dormitories.

13.3.2.14.1 All high-rise buildings, other than those where each guest room or guest suite has exterior exit access in accordance with 7.5.3 of NFPA *101*, shall be protected throughout by an approved, supervised automatic sprinkler system in accordance with 13.3.2.14.2. [*101*:29.3.5.1]

13.3.2.14.2* Where an automatic sprinkler system is installed, either for total or partial building coverage, the system shall be in accordance with Section 13.3, as modified by 13.3.2.14.3 and 13.3.2.14.4; in buildings up to and including four stories in height above grade, systems in accordance with NFPA 13R shall be permitted. [*101*:29.3.5.3]

13.3.2.14.3 The provisions for draft stops and closely spaced sprinklers in NFPA 13 shall not be required for openings complying with 8.6.8.2 of NFPA *101* where the opening is within the guest room or guest suite. [*101*:29.3.5.4]

13.3.2.14.4 In guest rooms and in guest room suites, sprinkler installations shall not be required in closets not exceeding 24 ft^2 (2.2 m^2) and in bathrooms not exceeding 55 ft^2 (5.1 m^2). [*101*:29.3.5.5]

13.3.2.15 New Apartment Buildings.

13.3.2.15.1 All buildings, other than those complying with 13.3.2.15.2, shall be protected throughout by an approved, supervised automatic sprinkler system installed in accordance with 13.3.2.15.3. [*101*:30.3.5.1]

13.3.2.15.2 Sprinkler systems shall not be required in buildings where every dwelling unit provides one of the following:

(1) An exit door opening directly to the street or yard at ground level
(2) Direct access to an outside stair that complies with 7.2.2 of NFPA *101* and serves a maximum of two units, both located on the same floor
(3) Direct access to an interior stair serving only that unit and separated from all other portions of the building by fire barriers having a 1-hour fire resistance rating with no openings therein [***101***:30.3.5.2]

13.3.2.15.3 Where an automatic sprinkler system is installed, either for total or partial building coverage, the system shall be installed in accordance with Section 13.3, as modified by 13.3.2.15.4 and 13.3.2.15.5. In buildings up to and including four stories in height above grade, systems in accordance with NFPA 13R shall be permitted. [***101***:30.3.5.3]

13.3.2.15.4 In buildings sprinklered in accordance with NFPA 13, closets less than 12 ft^2 (1.1 m^2) in area in individual dwelling units shall not be required to be sprinklered. Closets that contain equipment such as washers, dryers, furnaces, or water heaters shall be sprinklered regardless of size. [***101***:30.3.5.4]

13.3.2.15.5 The draft stop and closely spaced sprinkler requirements of NFPA 13 shall not be required for convenience openings complying with 8.6.8.2 of NFPA *101* where the convenience opening is within the dwelling unit. [***101***:30.3.5.5]

13.3.2.15.6 Listed quick-response or listed residential sprinklers shall be used throughout all dwelling units. [***101***:30.3.5.6]

13.3.2.15.7 Open parking structures complying with NFPA 88A, *Standard for Parking Structures*, that are contiguous with apartment buildings shall be exempt from the sprinkler requirements of 13.3.2.15.1. [***101***:30.3.5.7]

13.3.2.15.8 Buildings with unprotected openings in accordance with 8.6.6 of NFPA *101* shall be protected throughout by an approved, supervised automatic sprinkler system in accordance with 30.3.5 of NFPA *101*. [***101***:30.3.5.8]

13.3.2.16 Existing Apartment Buildings.

13.3.2.16.1* Where an automatic sprinkler system is installed, either for total or partial building coverage, the system shall be installed in accordance with Section 13.3, as modified by 13.3.2.16.2 and 13.3.2.16.3. In buildings up to and including four stories in height above grade, systems in accordance with NFPA 13R shall be permitted. [***101***:31.3.5.3]

13.3.2.16.2 In individual dwelling units, sprinkler installation shall not be required in closets not exceeding 24 ft^2 (2.2 m^2) and in bathrooms not exceeding 55 ft^2 (5.1 m^2). Closets that contain equipment such as washers, dryers, furnaces, or water heaters shall be sprinklered regardless of size. [***101***:31.3.5.4]

13.3.2.16.3 The draft stop and closely spaced sprinkler requirements of NFPA 13 shall not be required for convenience openings complying with 8.6.8.2 of NFPA *101* where the convenience opening is within the dwelling unit. [***101***:31.3.5.5]

13.3.2.16.4 Buildings using Option 3 shall be provided with automatic sprinkler protection installed in accordance with 13.3.2.16.4.1 through 13.3.2.16.6. [***101***:31.3.5.9]

13.3.2.16.4.1 Automatic sprinklers shall be installed in the corridor, along the corridor ceiling, utilizing the maximum spacing requirements of the standards referenced in 13.3.2.16.1. [***101***:31.3.5.9.1]

13.3.2.16.4.2 An automatic sprinkler shall be installed within every dwelling unit that has a door opening to the corridor, with such sprinkler positioned over the center of the door, unless the door to the dwelling unit has not less than a 20-minute fire protection rating and is self-closing. [***101***:31.3.5.9.2]

13.3.2.16.4.3 The workmanship and materials of the sprinkler installation specified in 31.3.5.9 shall meet the requirements of Section 9.7 of NFPA *101*. [***101***:31.3.5.9.3]

13.3.2.16.4.4 Where Option 3 is being used to permit the use of 1¾ in. (44 mm) thick, solid-bonded wood core doors in accordance with 31.2.2.1.3, sprinklers shall be provided within the exit enclosures in accordance with NFPA 13. [***101***:31.3.5.9.4]

13.3.2.16.5 Buildings using Option 4 shall be protected throughout by an approved automatic sprinkler system in accordance with 13.3.2.16.1 and meeting the requirements of Section 13.3 for supervision for buildings more than six stories in height. [***101***:31.3.5.10]

13.3.2.16.6* Where sprinklers are being used as an option to any requirement in this *Code*, the sprinklers shall be installed throughout the space in accordance with the requirements of that option. [***101***:31.3.5.11]

13.3.2.17 Lodging and Rooming Houses.

13.3.2.17.1 All new lodging or rooming houses, other than those meeting 13.3.2.17.2, shall be protected throughout by an approved automatic sprinkler system in accordance with 13.3.2.17.3. [***101***:26.3.6.1]

13.3.2.17.2 An automatic sprinkler system shall not be required where every sleeping room has a door opening directly to the outside of the building at street or ground level, or has a door opening directly to the outside leading to an exterior stairway that meets the requirements of 26.2.1.1.2 of NFPA *101*. [***101***:26.3.6.2]

13.3.2.17.3 Where an automatic sprinkler system is required or is used as an alternative method of protection, either for total or partial building coverage, the system shall be in accordance with Section 13.3 of this *Code* and 13.3.2.17.3.1 through 13.3.2.17.3.6. [***101***:26.3.6.3]

13.3.2.17.3.1 Activation of the automatic sprinkler system shall actuate the fire alarm system in accordance with 13.7. [***101***:26.3.6.3.1]

13.3.2.17.3.2 Systems in accordance with NFPA 13R shall be permitted in buildings up to and including four stories in height. [***101***:26.3.6.3.2]

13.3.2.17.3.3* Systems in accordance with NFPA 13D shall be permitted where the following requirements are met:

(1) The lodging or rooming house shall not be part of a mixed occupancy.
(2) Entrance foyers shall be sprinklered.
(3) Lodging or rooming houses with sleeping accommodations for more than eight occupants shall be treated as two-family dwellings with regard to the water supply. [***101***:26.3.6.3.3]

13.3.2.17.3.4 In buildings sprinklered in accordance with NFPA 13, closets less than 12 ft^2 (1.1 m^2) in area in individual dwelling units shall not be required to be sprinklered. [***101***:26.3.6.3.4]

13.3.2.17.3.5 In buildings sprinklered in accordance with NFPA 13, closets that contain equipment such as washers, dryers, furnaces, or water heaters shall be sprinklered regardless of size. [*101*:26.3.6.3.5]

13.3.2.17.3.6 In existing lodging or rooming houses, sprinkler installations shall not be required in closets not exceeding 24 ft^2 (2.2 m^2) and in bathrooms not exceeding 55 ft^2 (5.1 m^2). [*101*:26.3.6.3.6]

13.3.2.18 One- and Two-Family Dwellings.

13.3.2.18.1 All new one- and two-family dwellings shall be protected throughout by an approved automatic sprinkler system in accordance with 13.3.2.18.2. [*101*:24.3.5.1]

13.3.2.18.2 Where an automatic sprinkler system is installed, either for total or partial building coverage, the system shall be in accordance with Section 9.7 of NFPA *101*; in buildings up to and including four stories in height, systems in accordance with NFPA 13R and with NFPA 13D shall also be permitted. [*101*:24.3.5.2]

13.3.2.19 New Residential Board and Care Occupancies.

13.3.2.19.1 Large Facilities.

13.3.2.19.1.1 General. All buildings shall be protected throughout by an approved automatic sprinkler system installed in accordance with NFPA 13 and provided with quick-response or residential sprinklers throughout. [*101*:32.3.3.5.1]

13.3.2.19.1.2 Supervision. Automatic sprinkler systems shall be provided with electrical supervision in accordance with 13.3.1.7. [*101*:32.3.3.5.4]

13.3.2.19.2 Small Facilities.

13.3.2.19.2.1* All facilities, other than those meeting the requirement of 13.3.2.19.2.2, shall be protected throughout by an approved automatic sprinkler system, installed in accordance with 13.3.2.19.2.3, using quick-response or residential sprinklers. [*101*:32.2.3.5.1]

13.3.2.19.2.2* In conversions, sprinklers shall not be required in small board and care homes serving eight or fewer residents when all occupants have the ability as a group to move reliably to a point of safety within 3 minutes. [*101*:32.2.3.5.2]

13.3.2.19.2.3 Where an automatic sprinkler system is installed, for either total or partial building coverage, the following requirements shall be met:

(1) The system shall be in accordance with NFPA 13 and shall initiate the fire alarm system in accordance with 13.7.2.15.1.1.
(2) The adequacy of the water supply shall be documented to the AHJ. [*101*:32.2.3.5.3]

13.3.2.19.2.3.1 An automatic sprinkler system in accordance with NFPA 13R shall be permitted in facilities up to and including four stories in height. All habitable areas and closets shall be sprinklered. [*101*:32.2.3.5.3.1]

13.3.2.19.2.3.2* An automatic sprinkler system with a 30-minute water supply, and complying with the following requirements and with NFPA 13D shall be permitted:

(1) All habitable areas and closets shall be sprinklered.
(2) Facilities with more than eight residents shall be treated as two-family dwellings with regard to water supply. [*101*:32.2.3.5.3.2]

13.3.2.19.2.4 Automatic sprinkler systems installed in accordance with NFPA 13 and NFPA 13R shall be provided with electrical supervision in accordance with 13.3.1.7. [*101*:32.2.3.5.4]

13.3.2.19.2.5 Automatic sprinkler systems installed in accordance with NFPA 13D shall be provided with valve supervision by one of the following methods:

(1) A single listed control valve that shuts off both domestic and sprinkler systems and separate shutoff for the domestic system only
(2) Electrical supervision in accordance with 13.3.1.7
(3) Valve closure that causes the sounding of an audible signal in the facility [*101*:32.2.3.5.5]

13.3.2.19.2.6 Sprinkler piping serving not more than six sprinklers for any isolated hazardous area shall be permitted to be installed in accordance with 13.3.1.4 and shall meet the following requirements:

(1) In new installations, where more than two sprinklers are installed in a single area, waterflow detection shall be provided to initiate the fire alarm system required by 13.7.2.15.1.1.
(2) The duration of water supplies shall be as required by 13.3.2.19.2.3.2. [*101*:32.2.3.5.6]

13.3.2.20 Existing Residential Board and Care Facilities.

13.3.2.20.1 Large Facilities.

13.3.2.20.1.1* General. Where an automatic sprinkler system is installed, for either total or partial building coverage, the system shall be installed in accordance with Section 13.3, as modified by 13.3.2.20.1.1.1 through 13.3.2.20.1.1.3. [*101*:33.3.3.5.1]

13.3.2.20.1.1.1 In buildings not more than four stories in height, a sprinkler system complying with NFPA 13R shall be permitted. [*101*:33.3.3.5.1.1]

13.3.2.20.1.1.2 Automatic sprinklers shall not be required in closets not exceeding 24 ft^2 (2.2 m^2) and in bathrooms not exceeding 55 ft^2 (5.1 m^2), provided that such spaces are finished with lath and plaster or materials with a 15-minute thermal barrier. [*101*:33.3.3.5.1.2]

13.3.2.20.1.1.3 Initiation of the fire alarm system shall not be required for existing installations in accordance with 13.3.2.20.1.5. [*101*:33.3.3.5.1.3]

13.3.2.20.1.2 High-Rise Buildings. All high-rise buildings shall be protected throughout by an approved, supervised automatic sprinkler system in accordance with 13.3.2.20.1, as modified by 13.3.2.20.1.3. Such systems shall initiate the fire alarm system in accordance with 13.7.1.4. [*101*:33.3.3.5.2]

13.3.2.20.1.3 Closets and Bathrooms. Automatic sprinklers shall not be required in small clothes closets where the smallest dimension does not exceed 36 in. (915 mm), the area does not exceed 24 ft^2 (2.2 m^2), and the walls and ceiling are finished with noncombustible or limited-combustible materials. [*101*:33.3.3.5.3]

13.3.2.20.1.4 Supervision. Automatic sprinkler systems shall be supervised in accordance with Section 13.3; waterflow alarms shall not be required to be transmitted off-site. [*101*:33.3.3.5.4]

13.3.2.20.1.5 Domestic Water Supply Option. Sprinkler piping serving not more than six sprinklers for any isolated hazardous area in accordance with 13.3.1.4 shall be permitted; in new installations where more than two sprinklers are installed in a single area, waterflow detection shall be provided to initiate the fire alarm system required by 13.7.2.16.2.1. [*101*:33.3.3.5.5]

13.3.2.20.2 Small Facilities.

13.3.2.20.2.1 Where an automatic sprinkler system is installed, for either total or partial building coverage, the following requirements shall be met:

(1) The system shall be in accordance with Section 13.3 and shall initiate the fire alarm system in accordance with 13.7.2.16.1.1, as modified by 13.3.2.20.2.1.1 through 13.3.2.20.2.1.6.
(2) The adequacy of the water supply shall be documented to the AHJ. [*101*:33.2.3.5.2]

13.3.2.20.2.1.1* In prompt evacuation capability facilities, the following requirements shall be met:

(1) An automatic sprinkler system in accordance with NFPA 13D, shall be permitted.
(2) Automatic sprinklers shall not be required in closets not exceeding 24 ft^2 (2.2 m^2) and in bathrooms not exceeding 55 ft^2 (5.1 m^2), provided that such spaces are finished with lath and plaster or materials providing a 15-minute thermal barrier. [*101*:33.2.3.5.2.1]

13.3.2.20.2.1.2 In slow and impractical evacuation capability facilities, the following requirements shall be met:

(1) An automatic sprinkler system in accordance with NFPA 13D, with a 30-minute water supply, shall be permitted.
(2) All habitable areas and closets shall be sprinklered.
(3) Automatic sprinklers shall not be required in bathrooms not exceeding 55 ft^2 (5.1 m^2), provided that such spaces are finished with lath and plaster or materials providing a 15-minute thermal barrier. [*101*:33.2.3.5.2.2]

13.3.2.20.2.1.3 In prompt and slow evacuation facilities, where an automatic sprinkler system is in accordance with NFPA 13, sprinklers shall not be required in closets not exceeding 24 ft^2 (2.2 m^2) and in bathrooms not exceeding 55 ft^2 (5.1 m^2), provided that such spaces are finished with lath and plaster or materials providing a 15-minute thermal barrier. [*101*:33.2.3.5.2.3]

13.3.2.20.2.1.4 In prompt and slow evacuation capability facilities up to and including four stories in height, systems installed in accordance with NFPA 13R shall be permitted. [*101*:33.2.3.5.2.4]

13.3.2.20.2.1.5 In impractical evacuation capability facilities up to and including four stories in height, the following requirements shall be met:

(1) Systems installed in accordance with NFPA 13R, shall be permitted.
(2) All habitable areas and closets shall be sprinklered.
(3) Automatic sprinklers shall not be required in bathrooms not exceeding 55 ft^2 (5.1 m^2), provided that such spaces are finished with lath and plaster or materials providing a 15-minute thermal barrier. [*101*:33.2.3.5.2.5]

13.3.2.20.2.1.6 Initiation of the fire alarm system shall not be required for existing installations in accordance with 13.3.2.20.2.2. [*101*:33.2.3.5.2.6]

13.3.2.20.2.2 All impractical evacuation capability facilities shall be protected throughout by an approved, supervised automatic sprinkler system in accordance with 13.3.2.20.2.1. [*101*:33.2.3.5.3]

13.3.2.20.3 Sprinkler piping serving not more than six sprinklers for any isolated hazardous area shall be permitted to be installed in accordance with 13.3.1.4 and shall meet the following requirements:

(1) In new installations, where more than two sprinklers are installed in a single area, waterflow detection shall be provided to initiate the fire alarm system required by 13.7.2.16.1.1.
(2) The duration of water supplies shall be as required for the sprinkler systems addressed in 13.3.2.20.2. [*101*:33.2.3.5.6]

13.3.2.21 New Mercantile Occupancies.

13.3.2.21.1 Mercantile occupancies shall be protected by an approved automatic sprinkler system in accordance with Section 13.3 as follows:

(1) Throughout all mercantile occupancies three or more stories in height
(2) Throughout all mercantile occupancies exceeding 12,000 ft^2 (1115 m^2) in gross area
(3) Throughout stories below the level of exit discharge where such stories have an area exceeding 2500 ft^2 (232 m^2) and are used for the sale, storage, or handling of combustible goods and merchandise
(4) Throughout multiple occupancies protected as mixed occupancies in accordance with Chapter 6 of NFPA 1 UFC where the conditions of 13.3.2.21.1(1), (2), or (3) apply to the mercantile occupancy [*101*:36.3.5.1]

13.3.2.21.2 Automatic sprinkler systems in Class A mercantile occupancies shall be supervised in accordance with 13.3.1.7. [*101*:36.3.5.2]

13.3.2.21.3 Bulk merchandising retail buildings shall be protected throughout by an approved, supervised automatic sprinkler system in accordance with Section 13.3 and the applicable provisions of the following:

(1) NFPA 13, *Standard for the Installation of Sprinkler Systems*
(2) NFPA 30, *Flammable and Combustible Liquids Code*
(3) NFPA 30B, *Code for the Manufacture and Storage of Aerosol Products*
(4) Chapter 34 [*101*:36.4.5.5]

13.3.2.21.4 Mall Buildings.

13.3.2.21.4.1 Automatic Extinguishing Systems.

13.3.2.21.4.1.1 The mall building and all anchor buildings shall be protected throughout by an approved, supervised automatic sprinkler system in accordance with Section 13.3, 13.3.1.7, and 13.3.2.21.4.1.

13.3.2.21.4.1.2 The system shall be installed in such a manner that any portion of the system serving tenant spaces can be taken out of service without affecting the operating of the portion of the system serving the mall. [*5000*:27.4.4.7.1.2]

13.3.2.21.4.2 Hose Connections.

13.3.2.21.4.2.1 There shall be a hose outlet connected to a system sized to deliver 250 gal/min (946 L/min) at the most hydraulically remote outlet. [*5000*:27.4.4.7.2.1]

13.3.2.21.4.2.2 The outlet shall be supplied from the mall zone sprinkler system and shall be hydraulically calculated. [*5000*:27.4.4.7.2.2]

13.3.2.21.4.2.3 Hose outlets shall be provided at each of the following locations:

(1) Within the mall at the entrance to each exit passage or corridor
(2) At each floor level landing within enclosed stairways opening directly onto the mall
(3) At exterior public entrances to the mall [*5000*:27.4.4.7.2.3]

13.3.2.22 Existing Mercantile Occupancies.

13.3.2.22.1 Mercantile occupancies, other than single-story buildings that meet the requirements of a street floor, as defined in 3.3.239 of NFPA *101*, shall be protected by an approved automatic sprinkler system in accordance with NFPA 13 as follows:

(1) Throughout all mercantile occupancies with a story over 15,000 ft^2 (1400 m^2) in area
(2) Throughout all mercantile occupancies exceeding 30,000 ft^2 (2800 m^2) in gross area
(3) Throughout stories below the level of exit discharge where such stories have an area exceeding 2500 ft^2 (232 m^2) and used for the sale, storage, or handling of combustible goods and merchandise
(4) Throughout multiple occupancies protected as mixed occupancies in accordance with Chapter 6 of NFPA 1 UFC where the conditions of 13.3.2.22.1(1), (2), or (3) apply to the mercantile occupancy [*101*:37.3.5.1]

13.3.2.22.2 Bulk merchandising retail buildings shall be protected throughout by an approved, supervised automatic sprinkler system in accordance with Section 13.3 and the applicable provisions of the following:

(1) NFPA 13, *Standard for the Installation of Sprinkler Systems*
(2) NFPA 30, *Flammable and Combustible Liquids Code*
(3) NFPA 30B, *Code for the Manufacture and Storage of Aerosol Products*
(4) Chapter 13 [*101*:37.4.5.5]

13.3.2.23 Underground and Windowless Structures. Underground and limited access structures, and all areas and floor levels traversed in traveling to the exit discharge, shall be protected by an approved, supervised automatic sprinkler system in accordance with Section 13.3, unless such structures meet one of the following criteria:

(1) They have an occupant load of 50 or fewer persons in new underground or limited access portions of the structure.
(2) They have an occupant load of 100 or fewer persons in existing underground or limited access portions of the structure.
(3) The structure is a single-story underground or limited access structure that is permitted to have a single exit per Chapter 12 through Chapter 42 of NFPA *101*, with a common path of travel not greater than 50 ft (15 m). [*101*:11.7.3.4]

13.3.2.24 High-Rise Buildings.

13.3.2.24.1 New high-rise buildings shall be protected throughout by an approved automatic sprinkler system in accordance with Section 13.3.

13.3.2.24.2* Existing high-rise buildings shall be protected throughout by an approved automatic sprinkler system in accordance with this chapter, 13.3.2.24.2.1, and 13.3.2.24.2.3.

13.3.2.24.2.1 Each building owner shall, within 180 days of receiving notice, file an intent to comply with this regulation with the AHJ for approval.

13.3.2.24.2.2 The AHJ shall review and respond to the intent to comply submittal within 60 days of receipt.

13.3.2.24.2.3* The entire building shall be required to be protected by an approved automatic sprinkler system within 12 years of adoption of this *Code*.

13.3.2.25* New Storage Occupancies.

13.3.2.25.1 High-Piled Storage. An automatic sprinkler system shall be installed throughout all occupancies containing areas greater than 2500 ft^2 (232 m^2) for the high-piled storage of combustibles.

13.3.2.25.2* General Storage. An automatic sprinkler system shall be installed throughout all occupancies containing areas greater than 12,000 ft^2 (1115 m^2) for the storage of combustibles.

13.3.2.25.3 An automatic sprinkler system shall be installed throughout all occupancies containing storage commodities classified as Group A Plastics in excess of 5 ft (1.5 m) in height over an area exceeding 2500 ft^2 (232 m^2) in area.

13.3.2.25.4 Mini-Storage Building. An automatic sprinkler system shall be installed throughout all mini-storage buildings greater than 2500 ft^2 (232 m^2). [*5000*:30.3.5.3]

13.3.2.25.5 Bulk Storage of Tires. Buildings and structures where the volume for the storage of tires exceeds 20,000 ft^3 (566 m^3) shall be equipped throughout with an approved automatic fire sprinkler system. [*5000*:30.3.5.2]

13.3.2.26 Woodworking Operations. An approved automatic fire sprinkler system shall be installed in buildings containing woodworking operations exceeding 2500 ft^2 (232 m^2) that use equipment, machinery, or appliances, that generate finely divided combustible waste, or that use finely divided combustible materials. [*5000*:29.3.5.1.2]

13.3.2.27 New and Existing Day Care. Buildings with unprotected openings in accordance with 8.6.6 of NFPA *101* shall be protected throughout by an approved, supervised automatic sprinkler system in accordance with Section 13.3. [*101*:16.3.5.3; *101*:17.3.5.3]

13.3.3 Inspection, Testing, and Maintenance.

13.3.3.1 A sprinkler system installed in accordance with this *Code* shall be properly maintained to provide at least the same level of performance and protection as designed. The owner shall be responsible for maintaining the system and keeping it in good working condition.

13.3.3.2 A sprinkler system installed in accordance with this *Code* shall be inspected, tested, and maintained in accordance with NFPA 25.

13.3.3.3 Ceiling Tiles and Ceiling Assemblies. Where automatic sprinklers are installed, ceilings necessary for the proper actuation of the fire protection device in accordance with NFPA 13 shall be maintained.

13.3.3.4 Responsibility of the Owner or Occupant.

13.3.3.4.1* The owner or occupant shall provide ready accessibility to components of water-based fire protection systems that require inspection, testing, or maintenance. [**25**:4.1.1]

13.3.3.4.2* The responsibility for properly maintaining a water-based fire protection system shall be that of the owner of the property. [**25:**4.1.2]

13.3.3.4.2.1 By means of periodic inspections, tests, and maintenance, the equipment shall be shown to be in good operating condition, or any defects or impairments shall be revealed. [**25:**4.1.2.1]

13.3.3.4.2.2 Inspection, testing, and maintenance shall be implemented in accordance with procedures meeting or exceeding those established in this document and in accordance with the manufacturer's instructions. [**25:**4.1.2.2]

13.3.3.4.2.3 These tasks shall be performed by personnel who have developed competence through training and experience. [**25:**4.1.2.3]

13.3.3.4.2.4 Where the owner is not the occupant, the owner shall be permitted to pass on the authority for inspecting, testing, and maintaining the fire protection systems to the occupant, management firm, or managing individual through specific provisions in the lease, written use agreement, or management contract. [**25:**4.1.2.4]

13.3.3.4.3 The owner or occupant shall notify the AHJ, the fire department, if required, and the alarm-receiving facility before testing or shutting down a system or its supply. [**25:**4.1.3]

13.3.3.4.3.1 The notification shall include the purpose for the shutdown, the system or component involved, and the estimated time of shutdown. [**25:**4.1.3.1]

13.3.3.4.3.2 The AHJ, the fire department, and the alarm-receiving facility shall be notified when the system, supply, or component is returned to service. [**25:**4.1.3.2]

13.3.3.4.3.3 Where an occupant, management firm, or managing individual has received the authority for inspection, testing, and maintenance in accordance with 13.3.3.4.2.4, the occupant, management firm, or managing individual shall comply with 13.3.3.4.3. [**25:**4.1.3.3]

13.3.3.4.4* The owner or occupant shall promptly correct or repair deficiencies, damaged parts, or impairments found while performing the inspection, test, and maintenance requirements of this *Code*. [**25:**4.1.4]

13.3.3.4.4.1 Corrections and repairs shall be performed by qualified maintenance personnel or a qualified contractor. [**25:**4.1.4.1]

13.3.3.4.4.2 Where an occupant, management firm, or managing individual has received the authority for inspection, testing, and maintenance in accordance with 13.3.3.4.2.4, the occupant, management firm, or managing individual shall comply with 13.3.3.4.4. [**25:**4.1.4.2]

13.3.3.4.5* The building owner or occupant shall not make changes in the occupancy, the use or process, or the materials used or stored in the building without evaluation of the fire protection systems for their capability to protect the new occupancy, use, or materials. [**25:**4.1.5]

13.3.3.4.5.1 The evaluation shall consider factors that include, but are not limited to, the following:

(1) Occupancy changes such as converting office or production space into warehousing
(2) Process or material changes such as metal stamping of molded plastics
(3) Building revisions such as relocated walls, added mezzanines, and ceilings added below sprinklers
(4) Removal of heating systems in spaces with piping subject to freezing [**25:**4.1.5.1]

13.3.3.4.5.2 Where an occupant, management firm, or managing individual has received the authority for inspection, testing, and maintenance in accordance with 13.3.3.4.2.4, the occupant, management firm, or managing individual shall comply with 13.3.3.4.5. [**25:**4.1.5.2]

13.3.3.4.6 Where changes in the occupancy, hazard, water supply, storage commodity, storage arrangement, building modification, or other condition that affects the installation criteria of the system are identified, the owner or occupant shall promptly take steps, such as contacting a qualified contractor, consultant, or engineer, to evaluate the adequacy of the installed system in order to protect the building or hazard in question. [**25:**4.1.6]

13.3.3.4.6.1 Where the evaluation reveals a deficiency causing a threat to life or property, the owner shall make appropriate corrections. All requirements of the AHJ shall be followed. [**25:**4.1.6.1]

13.3.3.4.6.2 Where an occupant, management firm, or managing individual has received the authority for inspection, testing, and maintenance in accordance with 13.3.3.4.2.4, the occupant, management firm, or managing individual shall comply with 13.3.3.4.6. [**25:**4.1.6.2]

13.3.3.4.7 Where a water-based fire protection system is returned to service following an impairment, the system shall be verified to be working properly. [**25:**4.1.7]

13.3.3.5 Records.

13.3.3.5.1* Records of inspections, tests, and maintenance of the system and its components shall be made available to the AHJ upon request. [**25:**4.3.1]

13.3.3.5.2 Records shall indicate the procedure performed (e.g., inspection, test, or maintenance), the organization that performed the work, the results, and the date. [**25:**4.3.2]

13.3.3.5.3 Records shall be maintained by the owner. [**25:**4.3.3]

13.3.3.5.4 Original records shall be retained for the life of the system. [**25:**4.3.4]

13.3.3.5.5 Subsequent records shall be retained for a period of 1 year after the next inspection, test, or maintenance required by the standard. [**25:**4.3.5]

13.3.3.6 Buildings. Annually, prior to the onset of freezing weather, buildings with wet pipe systems shall be inspected to verify that windows, skylights, doors, ventilators, other openings and closures, blind spaces, unused attics, stair towers, roof houses, and low spaces under buildings do not expose water-filled sprinkler piping to freezing and to verify that adequate heat [minimum 40°F (4.4°C)] is available. [**25:**5.2.5]

13.3.3.7 Spare Sprinklers.

13.3.3.7.1* A supply of spare sprinklers (never fewer than six) shall be maintained on the premises so that any sprinklers that have operated or been damaged in any way can be promptly replaced. [**25:**5.4.1.4]

13.3.3.7.1.1 The sprinklers shall correspond to the types and temperature ratings of the sprinklers in the property. [**25:**5.4.1.4.1]

13.3.3.7.1.2 The sprinklers shall be kept in a cabinet located where the temperature in which they are subjected will at no time exceed 100°F (38°C). [**25:**5.4.1.4.2]

13.3.3.7.1.3 Where dry sprinklers of different lengths are installed, spare dry sprinklers shall not be required, provided that a means of returning the system to service is furnished. [**25:**5.4.1.4.2.1]

13.3.3.7.2 The stock of spare sprinklers shall include all types and ratings installed and shall be as follows:

(1) For protected facilities having under 300 sprinklers — no fewer than 6 sprinklers
(2) For protected facilities having 300 to 1000 sprinklers — no fewer than 12 sprinklers
(3) For protected facilities having over 1000 sprinklers — no fewer than 24 sprinklers [**25:**5.4.1.5]

13.3.3.7.3* A special sprinkler wrench shall be provided and kept in the cabinet to be used in the removal and installation of sprinklers. One sprinkler wrench shall be provided for each type of sprinkler installed. [**25:**5.4.1.6]

13.3.3.8 Sprinklers protecting spray coating areas shall be protected against overspray residue. [**25:**5.4.1.7]

13.3.3.8.1 Sprinklers subject to overspray accumulations shall be protected using plastic bags having a maximum thickness of 0.003 in. (0.076 mm) or shall be protected with small paper bags. [**25:**5.4.1.7.1]

13.3.3.8.2 Coverings shall be replaced when deposits or residue accumulate. [**25:**5.4.1.7.2]

13.3.3.9* Sprinklers shall not be altered in any respect or have any type of ornamentation, paint, or coatings applied after shipment from the place of manufacture. [**25:**5.4.1.8]

13.3.3.10 Sprinklers and automatic spray nozzles used for protecting commercial-type cooking equipment and ventilating systems shall be replaced annually. [**25:**5.4.1.9]

13.3.3.10.1 Where automatic bulb-type sprinklers or spray nozzles are used and annual examination shows no buildup of grease or other material on the sprinklers or spray nozzles, such sprinklers and spray nozzles shall not be required to be replaced. [**25:**5.4.1.9.1]

13.3.3.11* Dry Pipe Systems. Dry pipe systems shall be kept dry at all times. [**25:**5.4.2]

13.3.3.11.1 During nonfreezing weather, a dry pipe system shall be permitted to be left wet if the only other option is to remove the system from service while waiting for parts or during repair activities. [**25:**5.4.2.1]

13.3.3.11.2 Air driers shall be maintained in accordance with the manufacturer's instructions. [**25:**5.4.2.2]

13.3.3.11.3 Compressors used in conjunction with dry pipe sprinkler systems shall be maintained in accordance with the manufacturer's instructions. [**25:**5.4.2.3]

13.3.3.12* Installation and Acceptance Testing. Where maintenance or repair requires the replacement of sprinkler system components affecting more than 20 sprinklers, those components shall be installed and tested in accordance with NFPA 13. [**25:**5.4.3]

13.3.4 Impairments.

13.3.4.1 General. This subsection and Chapter 14 of NFPA 25 shall provide the minimum requirements for a water-based fire protection system impairment program. Measures shall be taken during the impairment to ensure that increased risks are minimized and the duration of the impairment is limited. [**25:**14.1]

13.3.4.2 Impairment Coordinator.

13.3.4.2.1 The building owner shall assign an impairment coordinator to comply with the requirements of Chapter 14 of NFPA 25. [**25:**14.2.1]

13.3.4.2.2 In the absence of a specific designee, the owner shall be considered the impairment coordinator. [**25:**14.2.2]

13.3.4.2.3 Where the lease, written use agreement, or management contract specifically grants the authority for inspection, testing, and maintenance of the fire protection system(s) to the tenant, management firm, or managing individual, the tenant, management firm, or managing individual shall assign a person as impairment coordinator. [**25:**14.2.3]

13.3.4.3 Tag Impairment System.

13.3.4.3.1* A tag shall be used to indicate that a system, or part thereof, has been removed from service. [**25:**14.3.1]

13.3.4.3.2* The tag shall be posted at each fire department connection and system control valve indicating which system, or part thereof, has been removed from service. [**25:**14.3.2]

13.3.4.3.3 The AHJ shall specify where the tag is to be placed. [**25:**14.3.3]

13.3.4.3.4 Impaired Equipment.

13.3.4.3.4.1 The impaired equipment shall be considered to be the water-based fire protection system, or part thereof, that is removed from service. [**25:**14.4.1]

13.3.4.3.4.2 The impaired equipment shall include, but shall not be limited to, the following:

(1) Sprinkler systems
(2) Standpipe systems
(3) Fire hose systems
(4) Underground fire service mains
(5) Fire pumps
(6) Water storage tanks
(7) Water spray fixed systems
(8) Foam-water systems
(9) Fire service control valves [**25:**14.4.2]

13.3.4.3.5* Preplanned Impairment Programs.

13.3.4.3.5.1 All preplanned impairments shall be authorized by the impairment coordinator. [**25:**14.5.1]

13.3.4.3.5.2 Before authorization is given, the impairment coordinator shall be responsible for verifying that the following procedures have been implemented:

(1) The extent and expected duration of the impairment have been determined.
(2) The areas or buildings involved have been inspected and the increased risks determined.
(3) Recommendations have been submitted to management or building owner/manager. Where a required fire protection system is out of service for more than 4 hours in a 24-hour period, the impairment coordinator shall arrange for one of the following:
    (a) Evacuation of the building or portion of the building affected by the system out of service

(b)*An approved fire watch
(c)*Establishment of a temporary water supply
(d)*Establishment and implementation of an approved program to eliminate potential ignition sources and limit the amount of fuel available to the fire

(4) The fire department has been notified.
(5) The insurance carrier, the alarm company, building owner/manager, and other AHJs have been notified.
(6) The supervisors in the areas to be affected have been notified.
(7) A tag impairment system has been implemented. *(See 13.3.4.3.)*
(8) All necessary tools and materials have been assembled on the impairment site. [**25:**14.5.2]

13.3.4.3.6 Emergency Impairments.

13.3.4.3.6.1 Emergency impairments include but are not limited to system leakage, interruption of water supply, frozen or ruptured piping, and equipment failure. [**25:**14.6.1]

13.3.4.3.6.2 When emergency impairments occur, emergency action shall be taken to minimize potential injury and damage. [**25:**14.6.2]

13.3.4.3.6.3 The coordinator shall implement the steps outlined in 13.3.4.3.5. [**25:**14.6.3]

13.3.4.3.7 Restoring Systems to Service. When all impaired equipment is restored to normal working order, the impairment coordinator shall verify that the following procedures have been implemented:

(1) Any necessary inspections and tests have been conducted to verify that affected systems are operational. Subsection 13.3.4 shall be consulted for guidance on the type of inspection and test required.
(2) Supervisors have been advised that protection is restored.
(3) The fire department has been advised that protection is restored.
(4) The building owner/manager, insurance carrier, alarm company, and other AHJs have been advised that protection is restored.
(5) The impairment tag has been removed. [**25:**14.7]

13.4 Fire Pumps.

13.4.1 General.

13.4.1.1 Where provided, fire pumps shall be installed in accordance with NFPA 20, *Standard for the Installation of Stationary Pumps for Fire Protection,* and Section 13.4.

13.4.1.2 Permits. Permits, where required, shall comply with Section 1.12.

13.4.1.3 Retroactivity. The provisions of this section reflect a consensus of what is necessary to provide an acceptable degree of protection from the hazards addressed in this standard at the time the section was issued. [**20:**1.4]

13.4.1.3.1 Unless otherwise specified, the provisions of this section shall not apply to facilities, equipment, structures, or installations that existed or were approved for construction or installation prior to the effective date of the section. Where specified, the provisions of this section shall be retroactive. [**20:**1.4.1]

13.4.1.3.2 In those cases where the AHJ determines that the existing situation presents an unacceptable degree of risk, the AHJ shall be permitted to apply retroactively any portion of this section deemed appropriate. [**20:**1.4.2]

13.4.1.3.3 The retroactive requirements of this section shall be permitted to be modified if their application clearly would be impractical in the judgment of the AHJ, and only where it is clearly evident that a reasonable degree of safety is provided. [**20:**1.4.3]

13.4.1.4 Other Pumps.

13.4.1.4.1 Pumps other than those specified in this section and having different design features shall be permitted to be installed where such pumps are listed by a testing laboratory. [**20:**5.1.2.1]

13.4.1.4.2 These pumps shall be limited to capacities of less than 500 gpm (1892 L/min). [**20:**5.1.2.2]

13.4.1.5* Approval Required.

13.4.1.5.1 Stationary pumps shall be selected based on the conditions under which they are to be installed and used. [**20:**5.2.1]

13.4.1.5.2 The pump manufacturer or its authorized representative shall be given complete information concerning the liquid and power supply characteristics. [**20:**5.2.2]

13.4.1.5.3 A complete plan and detailed data describing pump, driver, controller, power supply, fittings, suction and discharge connections, and liquid supply conditions shall be prepared for approval. [**20:**5.2.3]

13.4.1.5.4 Each pump, driver, controlling equipment, power supply and arrangement, and liquid supply shall be approved by the authority having jurisdiction for the specific field conditions encountered. [**20:**5.2.4]

13.4.1.6 Pump Operation. In the event of fire pump operation, qualified personnel shall respond to the fire pump location to determine that the fire pump is operating in a satisfactory manner. [**20:**5.3]

13.4.2* Equipment Protection.

13.4.2.1* General Requirements. The fire pump, driver, and controller shall be protected against possible interruption of service through damage caused by explosion, fire, flood, earthquake, rodents, insects, windstorm, freezing, vandalism, and other adverse conditions. [**20:**5.12.1]

13.4.2.1.1 Indoor Fire Pump Units. Indoor fire pump units shall be physically separated or protected by fire-rated construction in accordance with Table 13.4.2.1.1. [**20:**5.12.1.1]

Table 13.4.2.1.1 Equipment Protection

Pump Room/House	Building(s) Exposing Pump Room/House	Required Separation
Not sprinklered Not sprinklered Fully sprinklered	Not sprinklered Fully sprinklered Not sprinklered	2 hour fire-rated or 50 ft (15.3 m)
Fully sprinklered	Fully sprinklered	1 hour fire-rated or 50 ft (15.3 m)

[**20:**Table 5.12.1.1]

13.4.2.1.2 Outdoor Fire Pump Units.

13.4.2.1.2.1 Fire pump units located outdoors shall be located at least 50 ft (15.3 m) away from any exposing building. [**20:**5.12.1.2.1]

13.4.2.1.2.2 Outdoor installations also shall be required to be provided with protection against possible interruption in accordance with 13.4.2.1. [**20:**5.12.1.2.2]

13.4.2.2 Heat.

13.4.2.2.1 An approved or listed source of heat shall be provided for maintaining the temperature of a pump room or pump house, where required, above 40°F (5°C). [**20:**5.12.2.1]

13.4.2.2.2 The requirements of 13.4.4.5 shall be followed for higher temperature requirements for internal combustion engines. [**20:**5.12.2.2]

13.4.2.3 Normal Lighting. Artificial light shall be provided in a pump room or pump house. [**20:**5.12.3]

13.4.2.4 Emergency Lighting.

13.4.2.4.1 Emergency lighting shall be provided by fixed or portable battery-operated lights, including flashlights. [**20:**5.12.4.1]

13.4.2.4.2 Emergency lights shall not be connected to an engine-starting battery. [**20:**5.12.4.2]

13.4.2.5 Ventilation. Provision shall be made for ventilation of a pump room or pump house. [**20:**5.12.5]

13.4.2.6* Drainage.

13.4.2.6.1 Floors shall be pitched for adequate drainage of escaping water away from critical equipment such as the pump, driver, controller, and so forth. [**20:**5.12.6.1]

13.4.2.6.2 The pump room or pump house shall be provided with a floor drain that will discharge to a frost-free location. [**20:**5.12.6.2]

13.4.2.7 Guards. Guards shall be provided for flexible couplings and flexible connecting shafts to prevent rotating elements from causing injury to personnel. [**20:**5.12.7]

13.4.3* Valve Supervision.

13.4.3.1 Supervised Open. Where provided, the suction valve, discharge valve, bypass valves, and isolation valves on the backflow prevention device or assembly shall be supervised open by one of the following methods:

(1) Central station, proprietary, or remote station signaling service
(2) Local signaling service that will cause the sounding of an audible signal at a constantly attended point
(3) Locking valves open
(4) Sealing of valves and approved weekly recorded inspection where valves are located within fenced enclosures under the control of the owner [**20:**5.16.1]

13.4.3.2 Supervised Closed. The test outlet control valves shall be supervised closed. [**20:**5.16.2]

13.4.4* Driver System Operation.

13.4.4.1 Weekly Run.

13.4.4.1.1 Engines shall be started no less than once a week and run for no less than 30 minutes to attain normal running temperature. [**20:**11.6.1.1]

13.4.4.1.2 Engines shall run smoothly at rated speed, except for engines addressed in 13.4.4.1.3. [**20:**11.6.1.2]

13.4.4.1.3 Engines equipped with variable speed pressure limiting control shall be permitted to run at reduced speeds provided factory-set pressure is maintained and they run smoothly. [**20:**11.6.1.3]

13.4.4.2* System Performance. Engines shall be kept clean, dry, and well lubricated to ensure adequate performance. [**20:**11.6.2]

13.4.4.3 Battery Maintenance.

13.4.4.3.1 Storage batteries shall be kept charged at all times. [**20:**11.6.3.1]

13.4.4.3.2 Storage batteries shall be tested frequently to determine the condition of the battery cells and the amount of charge in the battery. [**20:**11.6.3.2]

13.4.4.3.3 Only distilled water shall be used in battery cells. [**20:**11.6.3.3]

13.4.4.3.4 Battery plates shall be kept submerged at all times. [**20:**11.6.3.4]

13.4.4.3.5 The automatic feature of a battery charger shall not be a substitute for proper maintenance of battery and charger. [**20:**11.6.3.5]

13.4.4.3.6 Periodic inspection of both battery and charger shall be made. [**20:**11.6.3.6]

13.4.4.3.7 This inspection shall determine that the charger is operating correctly, the water level in the battery is correct, and the battery is holding its proper charge. [**20:**11.6.3.7]

13.4.4.4* Fuel Supply Maintenance.

13.4.4.4.1 The fuel storage tanks shall be kept as full as possible at all times, but never less than 50 percent of tank capacity. [**20:**11.6.4.1]

13.4.4.4.2 The tanks shall always be filled by means that will ensure removal of all water and foreign material. [**20:**11.6.4.2]

13.4.4.5* Temperature Maintenance.

13.4.4.5.1 The temperature of the pump room, pump house, or area where engines are installed shall never be less than the minimum recommended by the engine manufacturer. [**20:**11.6.5.1]

13.4.4.5.2 An engine jacket water heater shall be provided to maintain 120°F (49°C). [**20:**11.6.5.2]

13.4.4.5.3 The engine manufacturer's recommendations for oil heaters shall be followed. [**20:**11.6.5.3]

13.4.4.6 Emergency Starting and Stopping.

13.4.4.6.1 The sequence for emergency manual operation, arranged in a step-by-step manner, shall be posted on the fire pump engine. [**20:**11.6.6.1]

13.4.4.6.2 It shall be the engine manufacturer's responsibility to list any specific instructions pertaining to the operation of this equipment during the emergency operation. [**20:**11.6.6.2]

13.4.5 Components.

13.4.5.1 Alarm and Signal Devices on Controller.

13.4.5.1.1 All visible indicator alarms shall be plainly visible. [**20:**12.4.1.1]

13.4.5.1.2* Visible indication shall be provided to indicate that the controller is in the automatic position. If the visible indicator is a pilot lamp, it shall be accessible for replacement. [**20:**12.4.1.2]

13.4.5.1.3 Separate visible indicators and a common audible alarm capable of being heard while the engine is running and operable in all positions of the main switch except the off position shall be provided to immediately indicate trouble caused by the following conditions:

(1) Critically low oil pressure in the lubrication system. The controller shall provide means for testing the position of the pressure switch contacts without causing trouble alarms.
(2) High engine jacket coolant temperature.
(3) Failure of engine to start automatically.
(4) Shutdown from overspeed.
(5) Battery failure or missing battery. Each controller shall be provided with a separate visible indicator for each battery.
(6) Battery charger failure. Each controller shall be provided with a separate visible indicator for battery charger failure and shall not require the audible alarm for battery charger failure.
(7) Low air or hydraulic pressure. Where air or hydraulic starting is provided *(see 11.2.5 and 11.2.5.4 of NFPA 20)*, each pressure tank shall provide to the controller separate visible indicators to indicate low pressure.
(8) System overpressure, for engines equipped with pressure limiting controls, to actuate at 115 percent of total rated head (pressure).
(9) ECM selector switch in alternate ECM position (for engines with ECM controls only).
(10) Fuel injection malfunction (for engines with ECM only).
(11) Low fuel level. Alarm at two-thirds tank capacity. [**20:**12.4.1.3]

13.4.5.1.4 No audible alarm silencing switch, other than the controller main switch, shall be permitted for the alarms required in 13.4.5.1.3. [**20:**12.4.1.4]

13.4.5.2 Alarm and Signal Devices Remote from Controller.

13.4.5.2.1 Where the pump room is not constantly attended, audible or visible alarms powered by a source other than the engine starting batteries and not exceeding 125 V shall be provided at a point of constant attendance. [**20:**12.4.2.1]

13.4.5.2.2 These alarms shall indicate the following:

(1) The engine is running (separate signal).
(2) The controller main switch has been turned to the off or manual position (separate signal).
(3)*Trouble on the controller or engine (separate or common signals). *(See 13.4.5.1.3.)* [**20:**12.4.2.2]

13.4.6 Field Acceptance Tests.

13.4.6.1 The pump manufacturer, the engine manufacturer (when supplied), the controller manufacturer, and the transfer switch manufacturer (when supplied) or their factory-authorized representatives shall be present for the field acceptance test. *(See Section 5.4 of NFPA 20.)* [**20:**14.2.1]

13.4.6.2* All the AHJs shall be notified as to the time and place of the field acceptance test. [**20:**14.2.2]

13.4.6.3 All electric wiring to the fire pump motor(s), including control (multiple pumps) interwiring, normal power supply, alternate power supply where provided, and jockey pump, shall be completed and checked by the electrical contractor prior to the initial startup and acceptance test. [**20:**14.2.3]

13.4.6.4* Certified Pump Curve.

13.4.6.4.1 A copy of the manufacturer's certified pump test characteristic curve shall be available for comparison of the results of the field acceptance test. [**20:**14.2.4.1]

13.4.6.4.2 The fire pump as installed shall equal the performance as indicated on the manufacturer's certified shop test characteristic curve within the accuracy limits of the test equipment. [**20:**14.2.4.2]

13.4.6.5 The fire pump shall perform at minimum, rated, and peak loads without objectionable overheating of any component. [**20:**14.2.5]

13.4.6.6 Vibrations of the fire pump assembly shall not be of a magnitude to warrant potential damage to any fire pump component. [**20:**14.2.6]

13.4.7 Manuals, Special Tools, and Spare Parts.

13.4.7.1 A minimum of one set of instruction manuals for all major components of the fire pump system shall be supplied by the manufacturer of each major component. [**20:**14.3.1]

13.4.7.2 The manual shall contain the following:

(1) A detailed explanation of the operation of the component
(2) Instructions for routine maintenance
(3) Detailed instructions concerning repairs
(4) Parts list and parts identification
(5) Schematic electrical drawings of controller, transfer switch, and alarm panels [**20:**14.3.2]

13.4.7.3 Any special tools and testing devices required for routine maintenance shall be available for inspection by the AHJ at the time of the field acceptance test. [**20:**14.3.3]

13.4.7.4 Consideration shall be given to stocking spare parts for critical items not readily available. [**20:**14.3.4]

13.4.8 Periodic Inspection, Testing, and Maintenance. Fire pumps shall be inspected, tested, and maintained in accordance with NFPA 25, *Standard for the Inspection, Testing, and Maintenance of Water-Based Fire Protection Systems.* [**20:**14.4]

13.4.9 Component Replacement.

13.4.9.1 Positive Displacement Pumps.

13.4.9.1.1 Whenever a critical path component in a positive displacement fire pump is replaced, as defined in 14.5.2.4 of NFPA 20, a field test of the pump shall be performed. [**20:**14.5.1.1]]

13.4.9.1.2 If components that do not affect performance are replaced, such as shafts, then only a functional test shall be required to ensure proper installation and reassembly. [**20:**14.5.1.2]

13.4.9.1.3 If components that affect performance are replaced, such as rotors, plungers, and so forth, then a retest shall be conducted by the pump manufacturer or designated representative, or qualified persons acceptable to the AHJ. [**20:**14.5.1.3]

13.4.9.1.4 Field Retest Results.

13.4.9.1.4.1 The field retest results shall be compared to the original pump performance as indicated by the original factory-certified test curve, whenever it is available. [**20:**14.5.1.4.1]

13.4.9.1.4.2 The field retest results shall meet or exceed the performance characteristics as indicated on the pump nameplate, and the results shall be within the accuracy limits of field testing as stated elsewhere in NFPA 20. [**20:**14.5.1.4.2]

13.5 Water Supply.

13.5.1 Private fire service mains shall be installed in accordance with NFPA 13, *Standard for the Installation of Sprinkler Systems,* and NFPA 24, *Standard for the Installation of Private Fire Service Mains and Their Appurtenances.*

13.5.2 Where no adequate and reliable water supply exists for fire-fighting purposes, the requirements of NFPA 1142, *Standard on Water Supplies for Suburban and Rural Fire Fighting,* shall apply.

13.5.3* The installation of devices to protect the public water supply from contamination shall comply with the provisions of NFPA 13, NFPA 24, and the plumbing code.

13.5.3.1 Backflow prevention devices shall be inspected, tested, and maintained in accordance with the requirements of NFPA 25.

13.5.4 Inspection, Testing, and Maintenance.

13.5.4.1 A private fire service main installed in accordance with this *Code* shall be properly maintained to provide at least the same level of performance and protection as designed. The owner shall be responsible for maintaining the system and keeping it in good working condition.

13.5.4.2 A private fire service main installed in accordance with this *Code* shall be inspected, tested, and maintained in accordance with NFPA 25.

13.6 Portable Extinguishers.

13.6.1 General Requirements.

13.6.1.1 The installation, maintenance, selection, and distribution of portable fire extinguishers shall be in accordance with NFPA 10, *Standard for Portable Fire Extinguishers,* and Section 13.6.

13.6.1.2* Where Required. Fire extinguishers shall be provided where required by this *Code* as specified in Table 13.6.1.2 and the referenced codes and standards listed in Chapter 2.

13.6.2 Classification, Ratings, and Performance of Fire Extinguishers.

13.6.2.1 Portable fire extinguishers used to comply with 13.6.2 shall be listed and labeled and shall meet or exceed all the requirements of one of the fire test standards and one of the appropriate performance standards shown below:

(1) Fire Test Standards:
  (a) ANSI/UL 711, *Standard for Rating and Testing of Fire Extinguishers*
  (b) CAN/ULC-S508, *Standard for Rating and Fire Testing of Fire Extinguishers and Class D Extinguishing Media*

(2) Performance Standards:
  (a) Carbon Dioxide Types. ANSI/UL 154, *Standard for Carbon Dioxide Fire Extinguishers;* CAN/ULC-S503, *Standard for Carbon Dioxide Hand and Wheeled Fire Extinguishers*
  (b) Dry Chemical Types. ANSI/UL 299, *Standard for Dry Chemical Fire Extinguishers;* CAN/ULC-S504, *Standard for Dry Chemical and Dry Powder Hand and Wheeled Fire Extinguishers*
  (c) Water Types. ANSI/UL 626, *Standard for 2½-Gallon Stored-Pressure, Water-Type Fire Extinguishers;* CAN/ULC-S507, *Standard for 9 Litre Stored Pressure Water Type Fire Extinguishers*
  (d) Halon Types. ANSI/UL 1093, *Standard for Halogenated Agent Fire Extinguishers;* CAN/ULC-S512, *Standard for Halogenated Agent Hand and Wheeled Fire Extinguishers*
  (e) Film-Forming Foam Types. ANSI/UL 8, *Standard for Foam Fire Extinguishers*
  (f) Halocarbon Type. ANSI/UL 2129, *Standard for Halocarbon Agent Fire Extinguishers* [**10:**1.3.1]

Table 13.6.1.2 Portable Fire Extinguishers Required

Occupancy Use	Where Required
Ambulatory health care occupancies	Yes
Apartment occupancies[a]	Yes
Assembly occupancies[b]	Yes
Business occupancies	Yes
Day-care occupancies	Yes
Detention and correctional occupancies[c,d]	Yes
Educational occupancies	Yes
Health care occupancies	Yes
Hotel and dormitory occupancies	Yes
Industrial occupancies	Yes
Lodging and rooming house occupancies	Yes
Mercantile occupancies	Yes
Occupancies in special structures	Yes
One- and two-family dwelling occupancies	No
Residential board and care occupancies	Yes
Storage occupancies[e]	Yes

[a]Portable fire extinguishers shall be permitted to be located at exterior locations or interior locations so that all portions of the buildings are within 75 ft (22.8 m) of travel distance to an extinguishing unit.

[b]Portable fire extinguishers are not required in seating or outdoor performance areas.

[c]Access to portable fire extinguishers shall be permitted to be locked.

[d]Portable fire extinguishers shall be permitted to be located at staff locations only.

[e]In storage areas where forklift, powered industrial truck, or cart operators are the primary occupants, fixed extinguishers, as specified in NFPA 10, need not be provided when:

(1) Use of vehicle mounted extinguishers is approved by the AHJ.

(2) Each vehicle is equipped with a 10-lb, 40A:80B:C extinguisher affixed to the vehicle using a mounting bracket approved by the extinguisher manufacturer or the AHJ for vehicular use.

(3) Not less than two spare extinguishers of equal or greater rating are available onsite to replace a discharged extinguisher.

(4) Vehicle operators are trained in the proper operation and use of the extinguisher.

(5) Inspections of vehicle-mounted extinguishers are performed daily.

13.6.2.2* The identification of the listing and labeling organization, the fire test, and the performance standard that the fire extinguisher meets or exceeds shall be clearly marked on each fire extinguisher. [**10:**1.3.2]

13.6.2.2.1 Fire extinguishers manufactured prior to January 1, 1986, shall not be required to comply with 13.6.2.2. [**10:**1.3.2.1]

13.6.2.3* An organization listing fire extinguishers used to comply with the requirements of subsection 13.6.2 shall utilize a third-party certification program for portable fire extinguishers that meets or exceeds ANSI/UL 1803, *Standard for Factory Follow-up on Third Party Certified Portable Fire Extinguishers.* [**10:**1.3.3]

13.6.2.3.1 Fire extinguishers manufactured prior to January 1, 1989, shall not be required to comply with 13.6.2.3. [**10:**1.3.3.1]

13.6.2.3.2 Certification organizations accredited by the Standards Council of Canada shall not be required to comply with 13.6.2.3. [**10:**1.3.3.2]

13.6.2.4 Extinguishers listed for the Class C rating shall not contain an agent that is a conductor of electricity. In addition to successfully meeting the requirements of ANSI/UL 711, *Standard for Rating and Fire Testing of Fire Extinguishers,* water-based agents shall be tested in accordance with ASTM D 5391, *Standard Test for Electrical Conductivity and Resistivity of a Flowing High Purity Water Sample.* Fire extinguishers containing water-based agents that have a conductivity higher than 1.00 microsiemens/cm at 77°F (25°C) shall be considered a conductor of electricity and therefore shall not be rated Class C. This requirement shall apply only to water-based extinguishers manufactured after August 15, 2002. [**10:**1.3.4]

13.6.3 General Requirements.

13.6.3.1 The classification of fire extinguishers shall consist of a letter that indicates the class of fire on which a fire extinguisher has been found to be effective, preceded by a rating number (Class A and Class B only) that indicates the relative extinguishing effectiveness. [**10:**1.5.1]

13.6.3.1.1 Fire extinguishers classified for use on Class C, Class D, or Class K hazards shall not be required to have a number preceding the classification letter. [**10:**1.5.1.1]

13.6.3.2 Portable fire extinguishers shall be maintained in a fully charged and operable condition and shall be kept in their designated places at all times when they are not being used. [**10:**1.5.2]

13.6.3.3 Fire extinguishers shall be conspicuously located where they will be readily accessible and immediately available in the event of fire. Preferably, they shall be located along normal paths of travel, including exits from areas. [**10:**1.5.3]

13.6.3.4 The following types of fire extinguishers are considered obsolete and shall be removed from service:

(1) Soda acid
(2) Chemical foam (excluding film-forming agents)
(3) Vaporizing liquid (e.g., carbon tetrachloride)
(4) Cartridge-operated water
(5) Cartridge-operated loaded stream
(6) Copper or brass shell (excluding pump tanks) joined by soft solder or rivets
(7) Carbon dioxide extinguishers with metal horns
(8) Solid charge–type AFFF extinguishers (paper cartridge) [**10:**1.5.4]

13.6.3.5 Cabinets housing fire extinguishers shall not be locked, except where fire extinguishers are subject to malicious use and cabinets include a means of emergency access. [**10:**1.5.5]

13.6.3.6* Fire extinguishers shall not be obstructed or obscured from view. In large rooms, and in certain locations where visual obstructions cannot be completely avoided, means shall be provided to indicate the extinguisher location. [**10:**1.5.6]

13.6.3.7* Portable fire extinguishers other than wheeled extinguishers shall be installed securely on the hanger, or in the bracket supplied by the extinguisher manufacturer, or in a listed bracket approved for such purpose, or placed in cabinets or wall recesses. Wheeled fire extinguishers shall be located in a designated location. [**10:**1.5.7]

13.6.3.8 Fire extinguishers installed under conditions where they are subject to dislodgement shall be installed in manufacturer's strap-type brackets specifically designed to cope with this problem. [**10:**1.5.8]

13.6.3.9 Fire extinguishers installed under conditions where they are subject to physical damage (e.g., from impact, vibration, the environment) shall be adequately protected. [**10:**1.5.9]

13.6.3.10 Fire extinguishers having a gross weight not exceeding 40 lb (18.14 kg) shall be installed so that the top of the fire extinguisher is not more than 5 ft (1.53 m) above the floor. Fire extinguishers having a gross weight greater than 40 lb (18.14 kg) (except wheeled types) shall be so installed that the top of the fire extinguisher is not more than 3½ ft (1.07 m) above the floor. In no case shall the clearance between the bottom of the fire extinguisher and the floor be less than 4 in. (10.2 cm). [**10:**1.5.10]

13.6.3.11 Extinguishers' operating instructions shall be located on the front of the extinguisher and shall be clearly visible. Hazardous materials identification systems (HMIS) labels, six-year maintenance labels, hydrostatic test labels, or other labels shall not be located or placed on the front of the extinguisher. These restrictions shall not apply to original manufacturer's labels, labels that specifically relate to the extinguisher's operation or fire classification, or inventory control labels specific to that extinguisher. [**10:**1.5.11]

13.6.3.12 Fire extinguishers mounted in cabinets or wall recesses shall be placed so that the fire extinguisher operating instructions face outward. The location of such fire extinguishers shall be marked conspicuously. *(See 13.6.3.6.)* [**10:**1.5.12]

13.6.3.13* Where fire extinguishers are installed in closed cabinets that are exposed to elevated temperatures, the cabinets shall be provided with screened openings and drains. [**10:**1.5.13]

13.6.3.14* Fire extinguishers shall not be exposed to temperatures outside of the listed temperature range shown on the fire extinguisher label. [**10:**1.5.14]

13.6.3.15 Fire extinguishers containing plain water only can be protected to temperatures as low as –40°F (–40°C) by the addition of an antifreeze that is stipulated on the fire extinguisher nameplate. Calcium chloride solutions shall not be used in stainless steel fire extinguishers. [**10:**1.5.15]

13.6.3.16* The owner or the owner's agent shall be provided with a fire extinguisher instruction manual that details condensed instructions and cautions necessary to the installation, operation, inspection, and maintenance of the fire extinguisher(s). The manual shall refer to NFPA 10 as a source of detailed instruction. [**10:**1.5.16]

13.6.4* Identification of Contents. A fire extinguisher shall have a label, tag, stencil, or similar indicator attached to it providing the following information:

(1) The contents' product name as it appears on the manufacturer's Material Safety Data Sheet (MSDS)
(2) Listing of the hazardous material identification in accordance with hazardous materials identification systems (HMIS) [in Canada, workplace hazardous materials identification systems (WHMIS)] developed by the National Paint & Coatings Association
(3) List of any hazardous materials that are in excess of 1.0 percent of the contents
(4) List of each chemical in excess of 5.0 percent of the contents
(5) Information as to what is hazardous about the agent in accordance with the Material Safety Data Sheet (MSDS)
(6) Manufacturer's or service agency's name, mailing address, and phone number [**10:**1.6]

13.6.5 Selection of Fire Extinguishers.

13.6.5.1* General Requirements. The selection of fire extinguishers for a given situation shall be determined by the character of the fires anticipated, the construction and occupancy of the individual property, the vehicle or hazard to be protected, ambient-temperature conditions, and other factors *(see Table H.2 of NFPA 10).* The number, size, placement, and limitations of use of fire extinguishers required shall meet the requirements of 13.6.6. [**10:**4.1]

13.6.5.1.1* Use of halogenated agent fire extinguishers shall be limited to applications where a clean agent is necessary to extinguish fire efficiently without damaging the equipment or area being protected, or where the use of alternate agents can cause a hazard to personnel in the area. [**10:**4.1.1]

13.6.5.1.1.1 Placement of portable fire extinguishers containing halogenated agents shall conform to minimum volume requirement warnings contained on the fire extinguisher nameplates. [**10:**4.1.1.1]

13.6.5.2 Selection by Hazard.

13.6.5.2.1 Fire extinguishers shall be selected for the class(es) of hazards to be protected in accordance with the subdivisions in 13.6.5.2.1.1 through 13.6.5.2.1.5. *(For specific hazards, see Section 4.3 of NFPA 10.)* [**10:**4.2.1]

13.6.5.2.1.1* Fire extinguishers for protecting Class A hazards shall be selected from types that are specifically listed and labeled for use on Class A fires. *(For halon agent–type extinguishers, see 13.6.5.1.1.)* [**10:**4.2.1.1]

13.6.5.2.1.2* Fire extinguishers for the protection of Class B hazards shall be selected from types that are specifically listed and labeled for use on Class B fires. *(For halon agent–type extinguishers, see 13.6.5.1.1.)* [**10:**4.2.1.2]

13.6.5.2.1.3* Fire extinguishers for protection of Class C hazards shall be selected from types that are specifically listed and labeled for use on Class C hazards. *(For halon agent–type fire extinguishers, see 13.6.5.1.1.)* [**10:**4.2.1.3]

13.6.5.2.1.4* Fire extinguishers and extinguishing agents for the protection of Class D hazards shall be of the types specifically listed and labeled for use on the specific combustible metal hazard. [**10:**4.2.1.4]

13.6.5.2.1.5 Fire extinguishers for the protection of Class K hazards shall be selected from types that are specifically listed and labeled for use on Class K fires. [**10:**4.2.1.5]

13.6.5.3* Class K Fire Extinguishers for Cooking Oil Fires. Fire extinguishers provided for the protection of cooking appliances that use combustible cooking media (vegetable or animal oils and fats) shall be listed and labeled for Class K fires. Class K fire extinguishers manufactured after January 1, 2002, shall not be equipped with "extended wand–type" discharge devices. [**10:**4.3.2]

13.6.5.3.1 Fire extinguishers installed specifically for the protection of cooking appliances that use combustible cooking media (animal, vegetable oils and fats) prior to June 30, 1998, shall not be required to comply with 13.6.5.3. *(Also see 13.6.5.3.3.)* [**10:**4.3.2.1]

13.6.5.3.2* A placard shall be conspicuously placed near the extinguisher that states that the fire protection system shall be activated prior to using the fire extinguisher. [**10:**4.3.2.2]

13.6.5.3.3 Existing dry chemical extinguishers without a Class K listing that were installed for the protection of Class K hazards shall be replaced with an extinguisher having Class K listing when the dry chemical extinguishers become due for either a 6-year maintenance or hydrostatic test. [**10:**4.3.2.3]

13.6.6 Distribution of Fire Extinguishers.

13.6.6.1 General Requirements.

13.6.6.1.1* The minimum number of fire extinguishers needed to protect a property shall be determined as outlined in this chapter and Chapter 5 of NFPA 10. [**10:**5.1.1]

13.6.6.1.2* Fire extinguishers shall be provided for the protection of both the building structure and the occupancy hazards contained therein. [**10:**5.1.2]

13.6.6.1.2.1 Required building protection shall be provided by fire extinguishers suitable for Class A fires. [**10:**5.1.2.1]

13.6.6.1.2.2* Occupancy hazard protection shall be provided by fire extinguishers suitable for such Class A, B, C, D, or K fire potentials as might be present. [**10:**5.1.2.2]

13.6.6.1.2.3 Fire extinguishers provided for building protection can be considered also for the protection of occupancies having a Class A fire potential. [**10:**5.1.2.3]

13.6.6.1.2.4 Buildings having an occupancy hazard subject to Class B or Class C fires, or both, shall have a standard complement of Class A fire extinguishers for building protection, plus additional Class B or Class C fire extinguishers, or both. Where fire extinguishers have more than one letter classification (such as 2-A:20-B:C), they can be considered to satisfy the requirements of each letter class. [**10:**5.1.2.4]

13.6.6.1.3 Rooms or areas shall be classified generally as light (low) hazard, ordinary (moderate) hazard, or extra (high) hazard. Limited areas of greater or lesser hazard shall be protected as required. [**10:**5.1.3]

13.6.6.1.4 On each floor level, the area protected and the travel distances shall be based on fire extinguishers installed in accordance with the tables in 13.6.6.2.1 and 13.6.6.3.1. [**10:**5.1.4]

Table 13.6.6.2.1 Fire Extinguisher Size and Placement for Class A Hazards

Criteria	Light (Low) Hazard Occupancy	Ordinary (Moderate) Hazard Occupancy	Extra (High) Hazard Occupancy
Minimum rated single extinguisher	2-A*	2-A*	4-A†
Maximum floor area per unit of A	3000 ft^2	1500 ft^2	1000 ft^2
Maximum floor area for extinguisher	11,250 ft‡	11,250 ft‡	11,250 ft‡
Maximum travel distance to extinguisher	75 ft	75 ft	75 ft

Note: For SI units: 1 ft = 0.305 m; 1 ft^2 = 0.0929 m^2.

*Up to two water-type extinguishers, each with 1-A rating, can be used to fulfill the requirements of one 2-A rated extinguisher.

†Two 2½ gal (9.46 L) water-type extinguishers can be used to fulfill the requirements of one 4-A rated extinguisher.

‡See E.3.3 of NFPA 10.

[**10**:Table 5.2.1]

13.6.6.2 Fire Extinguisher Size and Placement for Class A Hazards.

13.6.6.2.1 Minimal sizes of fire extinguishers for the listed grades of hazards shall be provided on the basis of Table 13.6.6.2.1, except as modified by 13.6.6.2.2. Fire extinguishers shall be located so that the maximum travel distances shall not exceed those specified in Table 13.6.6.2.1, except as modified by 13.6.6.2.2. *(See Annex E of NFPA 10.)* [**10**:5.2.1]

13.6.6.2.1.1 Certain smaller fire extinguishers that are charged with a multipurpose dry chemical or a halogenated agent are rated on Class B and Class C fires, but have insufficient effectiveness to earn the minimum 1-A rating even though they have value in extinguishing smaller Class A fires. They shall not be used to meet the requirements of 13.6.6.2.1. [**10**:5.2.1.1]

13.6.6.2.2 Up to one-half of the complement of fire extinguishers as specified in Table 13.6.6.2.1 shall be permitted to be replaced by uniformly spaced 1½ in. (3.81 cm) hose stations for use by the occupants of the building. Where hose stations are so provided, they shall conform to NFPA 14. The location of hose stations and the placement of fire extinguishers shall be such that the hose stations do not replace more than every other fire extinguisher. [**10**:5.2.2]

13.6.6.2.3 Where the area of the floor of a building is less than that specified in Table 13.6.6.2.1, at least one fire extinguisher of the minimum size recommended shall be provided. [**10**:5.2.3]

13.6.6.2.4 The protection requirements shall be permitted to be fulfilled with fire extinguishers of higher rating, provided the travel distance to such larger fire extinguishers does not exceed 75 ft (22.7 m). [**10**:5.2.4]

13.6.6.3* Fire Extinguisher Size and Placement for Class B Fires Other Than for Fires in Flammable Liquids of Appreciable Depth.

13.6.6.3.1 Minimal sizes of fire extinguishers for the listed grades of hazard shall be provided on the basis of Table 13.6.6.3.1. Fire extinguishers shall be located so that the maximum travel distances do not exceed those specified in the table used. *(See Annex E of NFPA 10.)* [**10**:5.3.1]

Table 13.6.6.3.1 Fire Extinguisher Size and Placement for Class B Hazards

Type of Hazard	Basic Minimum Extinguisher Rating	Maximum Travel Distance to Extinguishers	
		ft	m
Light (low)	5-B	30	9.15
	10-B	50	15.25
Ordinary (moderate)	10-B	30	9.15
	20-B	50	19.25
Extra (high)	40-B	30	9.15
	80-B	50	15.25

Notes:

(1) The specified ratings do not imply that fires of the magnitudes indicated by these ratings will occur, but rather they are provided to give the operators more time and agent to handle difficult spill fires that could occur.

(2) For fires involving water-soluble flammable liquids, see 4.3.4 of NFPA 10.

(3) For specific hazard applications, see Section 4.3 of NFPA 10.

[**10**:Table 5.3.1]

13.6.6.3.1.1 Fire extinguishers of lesser rating, desired for small specific hazards within the general hazard area, shall be permitted to be installed but shall not be considered as fulfilling any part of the requirements of Table 13.6.6.3.1. [**10**:5.3.1.1]

13.6.6.3.2 Up to three AFFF or FFFP fire extinguishers of at least 2½ gal (9.46 L) capacity shall be permitted to be used to fulfill extra (high) hazard requirements. [**10**:5.3.2]

13.6.6.3.3 Two AFFF or FFFP fire extinguishers of at least 1½ gal (6 L) capacity shall be permitted to be used to fulfill ordinary (moderate) hazard requirements. [**10**:5.3.3]

13.6.6.3.4 Two or more fire extinguishers of lower rating shall not be used to fulfill the protection requirements of Table 13.6.6.3.1 except as permitted by 13.6.6.3.2 and 13.6.6.3.3. [**10:**5.3.4]

13.6.6.3.5 The protection requirements shall be permitted to be fulfilled with fire extinguishers of higher ratings, provided the travel distance to such larger fire extinguishers does not exceed 50 ft (15.25 m). [**10:**5.3.5]

13.6.6.4* Fire Extinguisher Size and Placement for Class B Fires in Flammable Liquids of Appreciable Depth.

13.6.6.4.1* Portable fire extinguishers shall not be installed as the sole protection for flammable liquid hazards of appreciable depth where the surface area exceeds 10 ft^2 (0.93 m^2). Where personnel who are trained in extinguishing fires in the protected hazards are available on the premises, the maximum surface area shall not exceed 20 ft^2 (1.86 m^2). [**10:**5.4.1]

13.6.6.4.2 For flammable liquid hazards of appreciable depth, a Class B fire extinguisher shall be provided on the basis of at least two numerical units of Class B extinguishing potential per ft^2 (0.0929 m^2) of flammable liquid surface of the largest hazard area. AFFF- or FFFP-type fire extinguishers shall be permitted to be provided on the basis of 1-B of protection per ft^2 (0.09 m^2) of hazard. *(For fires involving cooking grease or water-soluble flammable liquids, see 13.6.5.3 of this Code and 4.3.4 of NFPA 10.)* [**10:**5.4.2]

13.6.6.4.3 Two or more fire extinguishers of lower ratings, other than AFFF- or FFFP-type fire extinguishers, shall not be used in lieu of the fire extinguisher required for the largest hazard area. Up to three AFFF- or FFFP-type fire extinguishers shall be permitted to fulfill the requirements, provided the sum of the Class B ratings meets or exceeds the value required for the largest hazard area. [**10:**5.4.3]

13.6.6.4.4 Travel distances for portable fire extinguishers shall not exceed 50 ft (15.25 m). *(See Annex E of NFPA 10.)* [**10:**5.4.4]

13.6.6.4.4.1 Scattered or widely separated hazards shall be individually protected. A fire extinguisher in the proximity of a hazard shall be carefully located to be accessible in the presence of a fire without undue danger to the operator. [**10:**5.4.4.1]

13.6.6.5* Fire Extinguisher Size and Placement for Class C Hazards. Fire extinguishers with Class C ratings shall be required where energized electrical equipment can be encountered. This requirement includes situations where fire either directly involves or surrounds electrical equipment. Since the fire itself is a Class A or Class B hazard, the fire extinguishers shall be sized and located on the basis of the anticipated Class A or Class B hazard. [**10:**5.5]

13.6.6.6 Fire Extinguisher Size and Placement for Class D Hazards.

13.6.6.6.1 Fire extinguishers or extinguishing agents with Class D ratings shall be provided for fires involving combustible metals. [**10:**5.6.1]

13.6.6.6.2 Fire extinguishers or extinguishing agents (media) shall be located not more than 75 ft (23 m) of travel distance from the Class D hazard. *(See Section E.6 of NFPA 10.)* [**10:**5.6.2]

13.6.6.6.3 Portable fire extinguishers or extinguishing agents (media) for Class D hazards shall be provided in those work areas where combustible metal powders, flakes, shavings, chips, or similarly sized products are generated. [**10:**5.6.3]

13.6.6.6.4 Size determination shall be on the basis of the specific combustible metal, its physical particle size, area to be covered, and recommendations by the fire extinguisher manufacturer on data from control tests conducted. [**10:**5.6.4]

13.6.6.7 Fire Extinguisher Size and Placement for Class K Fires.

13.6.6.7.1 Class K fire extinguishers shall be provided for hazards where there is a potential for fires involving combustible cooking media (vegetable or animal oils and fats). [**10:**5.7.1]

13.6.6.7.2 Maximum travel distance shall not exceed 30 ft (9.15 m) from the hazard to the extinguishers. [**10:**5.7.2]

13.6.6.8 Inspection, Maintenance, and Recharging.

13.6.6.8.1 General.

13.6.6.8.1.1 The owner or designated agent or occupant of a property in which fire extinguishers are located shall be responsible for such inspection, maintenance, and recharging. *(See 6.1.2 of NFPA 10 and 13.6.6.8.1.2.)* [**10:**6.1.3]

13.6.6.8.1.2* Maintenance, servicing, and recharging shall be performed by trained persons having available the appropriate servicing manual(s), the proper types of tools, recharge materials, lubricants, and manufacturer's recommended replacement parts or parts specifically listed for use in the fire extinguisher. [**10:**6.1.4]

13.6.6.8.1.3 Tags or labels shall not be placed on the front of the fire extinguisher. [**10:**6.1.5]

13.6.6.8.1.4 Labels indicating fire extinguisher use or classification or both shall be permitted to be placed on the front of the fire extinguisher. [**10:**6.1.6]

13.6.6.8.2 Inspection.

13.6.6.8.2.1* Frequency. Fire extinguishers shall be inspected when initially placed in service and thereafter at approximately 30-day intervals. Fire extinguishers shall be inspected, manually or by electronic monitoring, at more frequent intervals when circumstances require. [**10:**6.2.1]

13.6.6.8.2.2 Inspection Recordkeeping.

13.6.6.8.2.2.1 Personnel making inspections shall keep records of all fire extinguishers inspected, including those found to require corrective action. [**10:**6.2.4.1]

13.6.6.8.2.2.2 At least monthly, the date the inspection was performed and the initials of the person performing the inspection shall be recorded. [**10:**6.2.4.2]

13.6.6.8.2.2.3 Records shall be kept on a tag or label attached to the fire extinguisher, on an inspection checklist maintained on file or by an electronic method that provides a permanent record. [**10:**6.2.4.3]

13.6.6.8.3* Maintenance.

13.6.6.8.3.1 Frequency. Fire extinguishers shall be subjected to maintenance at intervals of not more than 1 year, at the time of hydrostatic test, or when specifically indicated by an inspection or electronic notification. [**10:**6.3.1]

13.6.6.8.3.2 Fire extinguishers removed from service for maintenance or recharge shall be replaced by a fire extin-

guisher suitable for the type of hazard being protected and shall be of at least equal rating. [**10:**6.3.1.4]

13.6.6.8.3.3* Maintenance Recordkeeping. Each fire extinguisher shall have a tag or label securely attached that indicates the month and year the maintenance was performed and that identifies the person performing the service. [**10:**6.3.4]

13.6.6.8.4* Recharging. All rechargeable-type fire extinguishers shall be recharged after any use or as indicated by an inspection or when performing maintenance. [**10:**6.4.1.1]

13.6.6.8.5 Hydrostatic Testing.

13.6.6.8.5.1 Subparagraph 13.6.6.8.5 of this *Code* and Chapter 7 of NFPA 10 require hydrostatic testing of pressure vessels used as fire extinguishers and specified components of fire extinguishers. [**10:**7.1.1]

13.6.6.8.5.2 Hydrostatic testing shall be performed by persons trained in pressure testing procedures and safeguards who have suitable testing equipment, facilities, and appropriate servicing manual(s) available. [**10:**7.1.2]

13.6.6.8.5.2.1 A hydrostatic test shall always include both an internal and external visual examination of the cylinder. [**10:**7.1.2.1]

13.6.6.8.5.2.2 Hydrostatic testing shall be conducted using water or some other noncompressible fluid as the test medium. Air or other gases shall not be used as the sole medium for pressure testing. All air shall be vented prior to hydrostatic testing to prevent violent and dangerous failure of the cylinder. [**10:**7.1.2.2]

13.6.6.8.5.3 If, at any time, a fire extinguisher shows evidence of dents, mechanical injury, or corrosion to the extent as to indicate weakness, it shall be condemned or hydrostatically retested subject to the provisions of 13.6.6.8.5.2 and 13.6.6.8.5.3. [**10:**7.1.3]

13.6.6.8.5.3.1 Pump tanks shall not be required to comply with 13.6.6.8.5.3. [**10:**7.1.3.1]

13.6.6.8.5.3.2 Nonrechargeable fire extinguishers other than halogenated agent types shall not be required to comply with 13.6.6.8.5.3 but shall be discharged and discarded where the fire extinguisher shows evidence of dents, mechanical injury, or corrosion to the extent of indicating weakness. [**10:**7.1.3.2]

13.6.6.8.5.3.3 Nonrechargeable halon agent–type fire extinguishers shall not be required to comply with 13.6.6.8.5.3. *(See 6.2.3.3 of NFPA 10.)* [**10:**7.1.3.3]

13.6.6.8.5.4* Examination of Cylinder Condition. Where a fire extinguisher cylinder or shell has one or more of the following conditions, it shall not be hydrostatically tested, but shall be condemned or destroyed by the owner or at the owner's direction:

(1)*Where repairs by soldering, welding, brazing, or use of patching compounds exist
(2) Where the cylinder threads are worn, corroded, broken, cracked, or nicked
(3) Where there is corrosion that has caused pitting, including pitting under a removable nameplate or nameband assembly
(4) Where the fire extinguisher has been burned in a fire
(5) Where a calcium chloride–type of extinguishing agent was used in a stainless steel fire extinguisher
(6) Where the shell is of copper or brass construction joined by soft solder or rivets
(7) Where the depth of a dent exceeds 1/10 of the greatest dimension of the dent if not in a weld, or exceeds 1/4 in. (0.6 cm) if the dent includes a weld
(8) Where any local or general corrosion, cuts, gouges, or dings have removed more than 10 percent of the minimum cylinder wall thickness
(9) Where a fire extinguisher has been used for any purpose other than that of a fire extinguisher [**10:**7.1.4]

13.6.6.8.5.5 When a fire extinguisher cylinder, shell, or cartridge fails a hydrostatic pressure test, or fails to pass a visual examination as specified in 13.6.6.8.5.2, it shall be condemned or destroyed by the owner or the owner's agent. When a cylinder is required to be condemned, the retester shall notify the owner in writing that the cylinder is condemned and that it cannot be re-used. Condemned cylinders shall be stamped "CONDEMNED" on the top, head, shoulder, or neck with a steel stamp. Minimum letter height shall be 1/8 in. (0.3 cm). [**10:**7.1.5]

13.6.6.8.5.5.1 A condemned cylinder shall not be repaired. No person shall remove or obliterate the "CONDEMNED" marking. [**10:**7.1.5.1]

13.6.6.8.5.6* Aluminum Shell Cylinder. Fire extinguishers having aluminum cylinders or shells suspected of being exposed to temperatures in excess of 350°F (177°C) shall be removed from service and subjected to a hydrostatic test. [**10:**7.1.6]

13.6.6.8.5.7 Frequency. At intervals not exceeding those specified in Table 13.6.6.8.5.7, fire extinguishers shall be hydrostatically retested. The hydrostatic retest shall be conducted within the calendar year of the specified test interval. In no case shall an extinguisher be recharged if it is beyond its specified retest date. *(For nonrechargeable fire extinguishers, see 6.4.3.1 of NFPA 10.)* [**10:**7.2]

Table 13.6.6.8.5.7 Hydrostatic Test Interval for Extinguishers

Extinguisher Type	Test Interval (Years)
Stored-pressure water, loaded stream, and/or antifreeze	5
Wetting agent	5
AFFF (aqueous film-forming foam)	5
FFFP (film-forming fluoroprotein foam)	5
Dry chemical with stainless steel shells	5
Carbon dioxide	5
Wet chemical	5
Dry chemical, stored-pressure, with mild steel shells, brazed brass shells, or aluminum shells	12
Dry chemical, cartridge- or cylinder-operated, with mild steel shells	12
Halogenated agents	12
Dry powder, stored-pressure, cartridge- or cylinder-operated, with mild steel shells	12

Note: Stored-pressure water extinguishers with fiberglass shells (pre-1976) are prohibited from hydrostatic testing due to manufacturer's recall.
[**10:**Table 7.2]

13.6.6.8.5.7.1 Nitrogen cylinders, argon cylinders, carbon dioxide cylinders, or cartridges used for inert gas storage that are used as an expellant for wheeled fire extinguishers and carbon dioxide extinguishers shall be hydrostatically tested every 5 years. [**10:**7.2.1]

(A) Cylinders (except those charged with carbon dioxide) complying with 49 CFR 173.34(e)16 shall be permitted to be hydrostatically tested every 10 years in lieu of the requirement in 13.6.6.8.5.7.1. [**10:**7.2.1.1]

13.6.6.8.5.7.2 Nitrogen cartridges, argon cartridges, and carbon dioxide cartridges used as an expellant for hand portable fire extinguishers that have DOT or TC markings shall be hydrostatically tested or replaced according to the requirements of DOT or TC. [**10:**7.2.2]

(A) Cartridges not exceeding 2 in. (5.1 cm) outside diameter and having a length less than 2 ft (0.61 m) shall be exempt from periodic hydrostatic retest. [**10:**7.2.2.1]

(B) Cartridges with DOT stamp 3E shall be exempt from periodic hydrostatic retest. [**10:**7.2.2.2]

13.6.6.8.5.7.3 A hydrostatic test shall be performed on fire extinguisher hose assemblies equipped with a shutoff nozzle at the end of the hose. The test interval shall be the same as specified for the fire extinguisher on which the hose is installed. [**10:**7.2.3]

13.6.6.8.5.7.4 High-pressure and low-pressure accessory hose (other than agent discharge hose) used on wheeled extinguishers shall be hydrostatically tested. The test interval shall be the same as that specified for the fire extinguisher agent cylinder on which the hose is installed. [**10:**7.2.3.1]

13.7 Detection, Alarm, and Communications Systems.

13.7.1 General.

13.7.1.1 Where building fire alarm systems or automatic fire detectors are required by other sections of this *Code*, they shall be provided and installed in accordance with NFPA 70, *NFPA 72, National Fire Alarm Code*, and Section 13.7.

13.7.1.2 Applications. Protected premises fire alarm systems shall include one or more of the following features:

(1) Manual alarm signal initiation
(2) Automatic alarm signal initiation
(3) Monitoring of abnormal conditions in fire suppression systems
(4) Activation of fire suppression systems
(5) Activation of fire safety functions
(6) Activation of alarm notification appliances
(7) Emergency voice/alarm communications
(8) Guard's tour supervisory service
(9) Process monitoring supervisory systems
(10) Activation of off-premises signals
(11) Combination systems
(12) Integrated systems [*72:*6.3]

13.7.1.3 All apparatus requiring rewinding or resetting to maintain normal operation shall be rewound or reset as promptly as possible after each test and alarm. All test signals received shall be recorded to indicate date, time, and type. [*72:*10.5.4]

13.7.1.4 The provisions of Section 13.7 shall apply only where specifically required by another section of this *Code*. [*101:*9.6.1.1]

13.7.1.4.1 Fire detection, alarm, and communications systems installed to make use of an alternative permitted by this *Code* shall be considered required systems and shall meet the provisions of this *Code* applicable to required systems. [*101:* 9.6.1.2]

13.7.1.4.2 All systems and components shall be approved for the purpose for which they are installed. [*101:*9.6.1.4]

13.7.1.4.3* To ensure operational integrity, the fire alarm system shall have an approved maintenance and testing program complying with the applicable requirements of Sections 13.4 and 13.7. [*101:*9.6.1.5]

13.7.1.4.4* Where a required fire alarm system is out of service for more than 4 hours in a 24-hour period, the AHJ shall be notified, and the building shall be evacuated or an approved fire watch shall be provided for all parties left unprotected by the shutdown until the fire alarm system has been returned to service. [*101:*9.6.1.6]

13.7.1.4.5 For the purposes of this *Code*, a complete fire alarm system shall provide functions for initiation, notification, and control, which shall perform as follows:

(1) The initiation function provides the input signal to the system.
(2) The notification function is the means by which the system advises that human action is required in response to a particular condition.
(3) The control function provides outputs to control building equipment to enhance protection of life. [*101:*9.6.1.7]

13.7.1.4.6 Nonrequired Coverage. Where installed, detection that is not required by an applicable law, code, or standard, whether total (complete), partial, or selective coverage, shall conform to the requirements of this *Code*.

Exception: Spacing requirements of Chapter 5 of NFPA 72. [72:5.5.2.4.1]

13.7.1.4.6.1 Where nonrequired detection devices are installed for a specific hazard, additional nonrequired detection devices shall not be required to be installed throughout an entire room or building. [*72:*5.5.2.4.2]

13.7.1.4.7 Signal Initiation.

13.7.1.4.7.1 Where required by other sections of this *Code*, actuation of the complete fire alarm system shall be initiated by, but shall not be limited to, any or all of the following means:

(1) Manual fire alarm initiation
(2) Automatic detection
(3) Extinguishing system operation [*101:*9.6.2.1]

13.7.1.4.7.2 Manual fire alarm boxes shall be used only for fire-protective signaling purposes. Combination fire alarm and guard's tour stations shall be acceptable. [*101:*9.6.2.2]

13.7.1.4.7.3 A manual fire alarm box shall be provided in the natural exit access path near each required exit from an area, unless modified by another section of this *Code*. [*101:*9.6.2.3]

13.7.1.4.7.4* Additional manual fire alarm boxes shall be located so that, on any given floor in any part of the building, no horizontal distance on that floor exceeding 200 ft (60 m) shall need to be traversed to reach a manual fire alarm box. [*101:*9.6.2.4]

13.7.1.4.7.5* For fire alarm systems using automatic fire detection or waterflow detection devices, not less than one manual fire alarm box shall be provided to initiate a fire alarm signal. This manual fire alarm box shall be located where required by the AHJ. [*101:*9.6.2.5]

13.7.1.4.7.6* Each manual fire alarm box on a system shall be accessible, unobstructed, and visible. [*101*:9.6.2.6]

13.7.1.4.7.7 Where a sprinkler system provides automatic detection and alarm system initiation, it shall be provided with an approved alarm initiation device that operates when the flow of water is equal to or greater than that from a single automatic sprinkler. [*101*:9.6.2.7]

13.7.1.4.7.8 Where a total (complete) coverage smoke detection system is required by another section of this *Code*, automatic detection of smoke in accordance with *NFPA 72* shall be provided in all occupiable areas, common areas, and work spaces in environments that are suitable for proper smoke detector operation. [*101*:9.6.2.8]

13.7.1.4.8 Smoke Alarms.

13.7.1.4.8.1 Where required by another section of this *Code*, single-station and multiple-station smoke alarms shall be in accordance with *NFPA 72*. System smoke detectors in accordance with *NFPA 72* and arranged to function in the same manner as single-station or multiple-station smoke alarms shall be permitted in lieu of smoke alarms. [*101*:9.6.2.9.1]

13.7.1.4.8.2 Smoke alarms, other than battery-operated devices as permitted by other sections of this *Code*, or battery-operated devices complying with 13.7.1.1 and the low-power wireless system requirements of *NFPA 72* shall receive their operating power from the building electrical system. [*101*:9.6.2.9.2]

13.7.1.4.8.3* In new construction, where two or more smoke alarms are required within a dwelling unit, suite of rooms, or similar area, they shall be arranged so that operation of any smoke alarm shall cause the alarm in all smoke alarms within the dwelling unit, suite of rooms, or similar area to sound, unless otherwise permitted by the following:

(1) The requirement of 13.7.1.4.8.3 shall not apply where permitted by another section of this *Code*.
(2) The requirement of 13.7.1.4.8.3 shall not apply to configurations that provide equivalent distribution of the alarm signal. [*101*:9.6.2.9.3]

13.7.1.4.8.4 The alarms shall sound only within an individual dwelling unit, suite of rooms, or similar area and shall not actuate the building fire alarm system, unless otherwise permitted by the AHJ. Remote annunciation shall be permitted. [*101*:9.6.2.9.4]

13.7.1.4.8.5 Where required by Chapter 11 through Chapter 42 of NFPA *101* and this *Code*, an automatic fire detection system shall be provided in hazardous areas for initiation of the signaling system. [*101*:9.6.2.10]

13.7.1.4.9 Occupant Notification.

13.7.1.4.9.1 Occupant notification shall be provided to alert occupants of fire or other emergency where required by other sections of this *Code*. [*101*:9.6.3.1]

13.7.1.4.9.2 Occupant notification shall be in accordance with 13.7.1.4.9.3 through 13.7.1.4.9.11, unless otherwise provided in 13.7.1.4.9.2.1 through 13.7.1.4.9.2.4.

13.7.1.4.9.2.1* Elevator lobby, hoistway, and associated machine room smoke detectors used solely for elevator recall, and heat detectors used solely for elevator power shutdown, shall not be required to activate the building evacuation alarm if the power supply and installation wiring to such detectors are monitored by the building fire alarm system, and if the activation of such detectors initiates a supervisory signal at a constantly attended location. [*101*:9.6.3.2.1]

13.7.1.4.9.2.2* Smoke detectors used solely for closing dampers or heating, ventilating, and air-conditioning system shutdown shall not be required to activate the building evacuation alarm, provided that the power supply and installation wiring to the detectors are monitored by the building fire alarm system, and the activation of the detectors initiates a supervisory signal at a constantly attended location. [*101*:9.6.3.2.2]

13.7.1.4.9.2.3* Smoke detectors located at doors for the exclusive operation of automatic door release shall not be required to activate the building evacuation alarm, provided that the power supply and installation wiring to the detectors are monitored by the building fire alarm system, and the activation of the detectors initiates a supervisory signal at a constantly attended location. [*101*:9.6.3.2.3]

13.7.1.4.9.2.4 Detectors in accordance with 22.3.4.3.1(2) and 23.3.4.3.1(2) of NFPA *101* shall not be required to activate the building evacuation alarm. [*101*:9.6.3.2.4]

13.7.1.4.9.3 Where permitted by Chapter 11 through Chapter 42 of NFPA *101*, a presignal system shall be permitted where the initial fire alarm signal is automatically transmitted without delay to a municipal fire department, to a fire brigade (if provided), and an on-site staff person trained to respond to a fire emergency. [*101*:9.6.3.3]

13.7.1.4.9.4 Where permitted by Chapter 11 through Chapter 42 of NFPA *101*, a positive alarm sequence shall be permitted, provided that it is in accordance with *NFPA 72*. [*101*:9.6.3.4]

13.7.1.4.9.5 Unless otherwise provided in 13.7.1.4.9.5.1 through 13.7.1.4.9.5.6, notification signals for occupants to evacuate shall be audible and visible signals in accordance with *NFPA 72* and ICC/ANSI A117.1, *American National Standard for Accessible and Usable Buildings and Facilities*, or other means of notification acceptable to the AHJ shall be provided. [*101*:9.6.3.5]

13.7.1.4.9.5.1 Areas not subject to occupancy by persons who are hearing impaired shall not be required to comply with the provisions for visible signals. [*101*:9.6.3.5.1]

13.7.1.4.9.5.2 Visible-only signals shall be provided where specifically permitted in health care occupancies in accordance with the provisions of Chapter 18 and Chapter 19 of NFPA *101*. [*101*:9.6.3.5.2]

13.7.1.4.9.5.3 Existing alarm systems shall not be required to comply with the provision for visible signals. [*101*:9.6.3.5.3]

13.7.1.4.9.5.4 Visible signals shall not be required in lodging or rooming houses in accordance with the provisions of Chapter 26 of NFPA *101*. [*101*:9.6.3.5.4]

13.7.1.4.9.5.5 Visible signals shall not be required in exit stair enclosures. [*101*:9.6.3.5.5]

13.7.1.4.9.5.6 Visible signals shall not be required in elevator cars. [*101*:9.6.3.5.6]

13.7.1.4.9.6 The general evacuation alarm signal shall operate in accordance with one of the methods prescribed by 13.7.1.4.9.6.1 through 13.7.1.4.9.6.4. [*101*:9.6.3.6]

13.7.1.4.9.6.1 The general evacuation alarm signal shall operate throughout the entire building. [*101*:9.6.3.6.1]

13.7.1.4.9.6.2* Where total evacuation of occupants is impractical due to building configuration, only the occupants in the affected zones shall be notified initially. Provisions shall be made to selectively notify occupants in other zones to afford orderly evacuation of the entire building. [*101*:9.6.3.6.2]

13.7.1.4.9.6.3 Where occupants are incapable of evacuating themselves because of age, physical or mental disabilities, or physical restraint, the private operating mode as described in *NFPA 72* shall be permitted to be used. Only the attendants and other personnel required to evacuate occupants from a zone, area, floor, or building shall be required to be notified. The notification shall include means to readily identify the zone, area, floor, or building in need of evacuation. [*101*:9.6.3.6.3]

13.7.1.4.9.6.4 In mall buildings in accordance with Chapter 36 and Chapter 37 of NFPA *101*, notification within the mall shall be permitted in accordance with 36.4.4.4.3.1(3) and 37.4.4.4.3.1(3) of NFPA *101*. [*101*:9.6.3.6.4]

13.7.1.4.9.6.5 The general evacuation signal shall not be required to operate in exit stair enclosures. [*101*:9.6.3.6.5]

13.7.1.4.9.6.6 The general evacuation signal shall not be required to operate in elevator cars. [*101*:9.6.3.6.6]

13.7.1.4.9.7 Audible alarm notification appliances shall be of such character and so distributed as to be effectively heard above the average ambient sound level that exists under normal conditions of occupancy. [*101*:9.6.3.7]

13.7.1.4.9.8 Audible alarm notification appliances shall produce signals that are distinctive from audible signals used for other purposes in a given building. [*101*:9.6.3.8]

13.7.1.4.9.9 Automatically transmitted or live voice evacuation or relocation instructions shall be permitted to be used to notify occupants and shall be in accordance with *NFPA 72, National Fire Alarm Code*. [*101*:9.6.3.9]

13.7.1.4.9.10 Unless otherwise permitted by another section of this *Code*, audible and visible fire alarm notification appliances shall comply with either 13.7.1.4.9.10.1 or 13.7.1.4.9.10.2. [*101*:9.6.3.10]]

13.7.1.4.9.10.1 Audible and visible fire alarm notification appliances shall be used only for fire alarm system or other emergency purposes. [*101*:9.6.3.10.1]

13.7.1.4.9.10.2 Voice communication systems shall be permitted to be used for other purposes, subject to the approval of the AHJ, if the fire alarm system takes precedence over all other signals. [*101*:9.6.3.10.2]

13.7.1.4.9.11 Alarm notification signals shall take precedence over all other signals. [*101*:9.6.3.11]

13.7.1.4.10 Emergency Forces Notification.

13.7.1.4.10.1 Where required by another section of this *Code*, emergency forces notification shall be provided to alert the municipal fire department and fire brigade (if provided) of fire or other emergency. [*101*:9.6.4.1]

13.7.1.4.10.2 Where fire department notification is required by another section of this *Code*, the fire alarm system shall be arranged to transmit the alarm automatically via any of the following means acceptable to the AHJ and shall be in accordance with *NFPA 72*:

(1) Auxiliary fire alarm system
(2) Central station fire alarm system
(3) Proprietary supervising station fire alarm system
(4) Remote supervising station fire alarm system [*101*:9.6.4.2]

13.7.1.4.10.3 For existing installations where none of the means of notification specified in 13.7.1.4.10.2(1) through 13.7.1.4.10.2(4) are available, an approved plan for notification of the municipal fire department shall be permitted. [*101*:9.6.4.3]

13.7.1.4.11 Fire Safety Functions.

13.7.1.4.11.1 Fire safety functions shall be installed in accordance with the requirements of *NFPA 72*. [*101*:9.6.5.1]

13.7.1.4.11.2 Where required by another section of this *Code*, the following functions shall be actuated:

(1) Release of hold-open devices for doors or other opening protectives
(2) Stairwell or elevator shaft pressurization
(3) Smoke management or smoke control systems
(4) Unlocking of doors
(5) Elevator recall and shutdown [*101*:9.6.5.2]

13.7.1.4.12 Location of Controls. Operator controls, alarm indicators, and manual communications capability shall be installed at a convenient location acceptable to the AHJ. [*101*:9.6.6]

13.7.1.4.13 Zoning and Annunciation.

13.7.1.4.13.1 Where alarm annunciation is required by another section of this *Code*, it shall comply with 13.7.1.4.13.2 through 13.7.1.4.13.7. [*101*:9.6.7.1]

13.7.1.4.13.2 Visible Zone Alarm Indication. If required, the location of an operated initiating device shall be visibly indicated by building, floor, fire zone, or other approved subdivision by annunciation, printout, or other approved means. The visible indication shall not be canceled by the operation of an audible alarm silencing means. [*72*:4.4.6.1]

13.7.1.4.13.2.1* All required annunciation means shall be readily accessible to responding personnel and shall be located as required by the AHJ to facilitate an efficient response to the fire situation. [*72*:4.4.6.1.1]

13.7.1.4.13.2.2* Zone of Origin. Fire alarm systems serving two or more zones shall identify the zone of origin of the alarm initiation by annunciation or coded signal. [*72*:4.4.6.1.2]

13.7.1.4.13.2.3 Display. Visual annunciators shall be capable of displaying all zones in alarm. If all zones in alarm are not displayed simultaneously, there shall be visual indication that other zones are in alarm. [*72*:4.4.6.1.3]

13.7.1.4.13.3 Fire Command Center. Alarm annunciation at the fire command center shall be by means of audible and visible indicators. [*72*:4.4.6.2]

13.7.1.4.13.4 Zone. For the purpose of alarm annunciation, each floor of the building shall be considered as a separate zone. If a floor is subdivided by fire or smoke barriers and the fire plan for the protected premises allows relocation of occupants from the zone of origin to another zone on the same floor, each zone on the floor shall be annunciated separately for purposes of alarm location. [*72*:4.4.6.3]

13.7.1.4.13.5 Multiple Buildings. If the system serves more than one building, each building shall be indicated separately. [*72*:4.4.6.4]

13.7.1.4.13.6 Alarm annunciation at the control center shall be by means of audible and visible indicators. [*101*:9.6.7.2]

13.7.1.4.13.7 For the purposes of alarm annunciation, each floor of the building, other than floors of existing buildings, shall be considered as not less than one zone, unless otherwise permitted by 13.7.1.4.13.8.3, 13.7.1.4.13.8.4, or another section of this *Code*. [*101*:9.6.7.3]

13.7.1.4.13.8 If a floor area exceeds 22,500 ft^2 (2090 m^2), additional fire alarm zoning shall be provided, and the length of any single fire alarm zone shall not exceed 300 ft (91 m) in any direction, except as provided in 13.7.1.4.13.8.1 through 13.7.1.4.13.8.4 or otherwise modified by another section of this *Code*. [*101*:9.6.7.4]

13.7.1.4.13.8.1 Where permitted by another section of this *Code*, fire alarm zones shall be permitted to exceed 22,500 ft^2 (2090 m^2), and the length of a zone shall be permitted to exceed 300 ft (91 m) in any direction. [*101*:9.6.7.4.1]

13.7.1.4.13.8.2 Where the building is protected by an automatic sprinkler system in accordance with NFPA 13, the area of the fire alarm zone shall be permitted to coincide with the allowable area of the sprinkler system. [*101*:9.6.7.4.2]

13.7.1.4.13.8.3 Where the building is protected by an automatic sprinkler system in accordance with NFPA 13D, the sprinkler system shall be permitted to be annunciated on the fire alarm system as a single zone. [*101*:9.6.7.4.3]

13.7.1.4.13.8.4 Where the building is protected by an automatic sprinkler system in accordance with NFPA 13R, the sprinkler system shall be permitted to be annunciated on the fire alarm system as a single zone. [*101*:9.6.7.4.4]

13.7.1.4.13.9 A system trouble signal shall be annunciated at the control center by means of audible and visible indicators. [*101*:9.6.7.5]

13.7.1.4.13.10 A system supervisory signal shall be annunciated at the control center by means of audible and visible indicators. [*101*:9.6.7.6]

13.7.2 Where Required.

13.7.2.1 New Assembly Occupancies. Assembly occupancies with occupant loads of more than 300 and all theaters with more than one audience-viewing room shall be provided with an approved fire alarm system in accordance with Section 13.7 of this *Code* and NFPA *101*, unless otherwise permitted by the following:

(1) Assembly occupancies that are a part of a multiple occupancy protected by a mixed occupancy (*see 6.1.14*) shall be permitted to be served by a common fire alarm system, provided that the individual requirements of each occupancy are met.
(2) Voice communication or public address systems complying with 12.3.4.3.4 of NFPA *101* shall not be required to comply with 13.7.1.4. [*101*:12.3.4.1]

13.7.2.2 Existing Assembly Occupancies. Assembly occupancies with occupant loads of more than 300 and all theaters with more than one audience-viewing room shall be provided with an approved fire alarm system in accordance with Section 13.7 of this *Code* and NFPA *101*, unless otherwise permitted by the following:

(1) Assembly occupancies that are a part of a multiple occupancy protected as a mixed occupancy (*see 6.1.14*) shall be permitted to be served by a common fire alarm system, provided that the individual requirements of each occupancy are met.
(2) Voice communication or public address systems complying with 13.3.4.3.4 of NFPA *101* shall not be required to comply with Section 13.7 of this *Code*.
(3) This requirement shall not apply to assembly occupancies where, in the judgment of the AHJ, adequate alternative provisions exist or are provided for the discovery of a fire and for alerting the occupants promptly. [*101*:13.3.4.1]

13.7.2.3 New Educational Occupancies.

13.7.2.3.1 Educational occupancies shall be provided with a fire alarm system in accordance with Section 13.7 and NFPA *101*. [*101*:14.3.4.1.1]

13.7.2.3.2 The requirement of 13.7.2.3.1 shall not apply to buildings meeting all of the following criteria:

(1) Buildings having an area not exceeding 1000 ft^2 (93 m^2)
(2) Buildings containing a single classroom
(3) Buildings located not less than 30 ft (9.2 m) from another building [*101*:14.3.4.1.2]

13.7.2.4 Existing Educational Occupancies.

13.7.2.4.1 Educational occupancies shall be provided with a fire alarm system in accordance with Section 13.7 and NFPA *101*. [*101*:15.3.4.1.1]

13.7.2.4.2 The requirement of 13.7.2.4.1 shall not apply to buildings meeting all of the following criteria:

(1) Buildings having an area not exceeding 1000 ft^2 (93 m^2)
(2) Buildings containing a single classroom
(3) Buildings located not less than 30 ft (9.2 m) from another building [*101*:15.3.4.1.2]

13.7.2.5 New Health Care Occupancies.

13.7.2.5.1 General. Health care occupancies shall be provided with a fire alarm system in accordance with Section 13.7 and NFPA *101*. [*101*:18.3.4.1]

13.7.2.5.2 Detection in Spaces Open to Corridors. Detectors shall be installed in spaces open to the corridor in accordance with 18.3.6.1 of NFPA *101*.

13.7.2.5.3* Nursing Homes. An approved automatic smoke detection system shall be installed in corridors throughout smoke compartments containing patient sleeping rooms and in spaces open to corridors as permitted in nursing homes by 18.3.6.1 of NFPA *101*, unless otherwise permitted by the following:

(1) Corridor systems shall not be required where each patient sleeping room is protected by an approved smoke detection system.
(2) Corridor systems shall not be required where patient room doors are equipped with automatic door-closing devices with integral smoke detectors on the room side installed in accordance with their listing, provided that the integral detectors provide occupant notification. [*101*:18.3.4.5.3]

13.7.2.6 Existing Health Care Occupancies.

13.7.2.6.1 General. Health care occupancies shall be provided with a fire alarm system in accordance with Section 13.7 and NFPA *101*. [*101*:19.3.4.1]

13.7.2.6.2 Corridors. An approved automatic smoke detection system in accordance with 13.7.1 shall be installed in all corridors of limited care facilities, unless otherwise permitted by the following:

(1) Where each patient sleeping room is protected by an approved smoke detection system, and a smoke detector is provided at smoke barriers and horizontal exits in accordance with 13.7.1 of this *Code*, the corridor smoke detection system shall not be required on the patient sleeping room floors.
(2) Smoke compartments protected throughout by an approved, supervised automatic sprinkler system in accordance with 19.3.5.6 of NFPA *101* shall be permitted. [***101***:19.3.4.5.1]

13.7.2.6.3 Detection in Spaces Open to Corridors. Detectors shall be installed in spaces open to the corridor in accordance with 19.3.6.1 of NFPA *101*.

13.7.2.7 New Detention and Correctional Occupancies.

13.7.2.7.1 Detention and correctional occupancies shall be provided with a fire alarm system in accordance with 13.7.1 and NFPA *101*, except as modified by 22.3.4.2 through 22.3.4.4.3 of NFPA *101*. [***101***:22.3.4.1.1]

13.7.2.7.2* Detection. An approved automatic smoke detection system shall be in accordance with 13.7.1.4, as modified by 13.7.2.7.2.1 through 13.7.2.7.2.3, throughout all resident sleeping areas and adjacent day rooms, activity rooms, or contiguous common spaces. [***101***:22.3.4.4]

13.7.2.7.2.1 Smoke detectors shall not be required in sleeping rooms with four or fewer occupants. [***101***:22.3.4.4.1]

13.7.2.7.2.2 Other arrangements and positioning of smoke detectors shall be permitted to prevent damage or tampering, or for other purposes. [***101***:22.3.4.4.2]

13.7.2.7.2.2.1 Other arrangements, as specified in 13.7.2.7.2.2, shall be capable of detecting any fire, and the placement of detectors shall be such that the speed of detection is equivalent to that provided by the spacing and arrangements required by the installation standards referenced in 13.7.1.4. [***101***:22.3.4.4.2.1]

13.7.2.7.2.2.2 Detectors shall be permitted to be located in exhaust ducts from cells, behind grilles, or in other locations. [***101***:22.3.4.4.2.2]

13.7.2.7.2.2.3 The equivalent performance of the design permitted by 13.7.2.7.2.2.2 shall be acceptable to the AHJ in accordance with the equivalency concepts specified in Section 1.4 of NFPA *101*. [***101***:22.3.4.4.2.3]

13.7.2.7.2.3* Smoke detectors shall not be required in Use Condition II open dormitories where staff is present within the dormitory whenever the dormitory is occupied. [***101***:22.3.4.4.3]

13.7.2.8 Existing Detention and Correctional Occupancies.

13.7.2.8.1 Detention and correctional occupancies shall be provided with a fire alarm system in accordance with 13.7.1.4 and NFPA *101*, except as modified by 23.3.4.1.2 through 23.3.4.4.4. [***101***:23.3.4.1.1]

13.7.2.8.1.1 Existing systems lacking the monitoring of wiring required by 13.7.1.4.3 shall be permitted to be continued in use in buildings protected by a complete automatic extinguishing system. [***101***:23.3.4.1.2]

13.7.2.8.2 Detection. An approved automatic smoke detection system shall be in accordance with Section 13.7, as modified by 13.7.2.8.2.1 through 13.7.2.8.2.4, throughout all resident housing areas. [***101***:23.3.4.4]

13.7.2.8.2.1 Smoke detectors shall not be required in sleeping rooms with four or fewer occupants in Use Condition II or Use Condition III. [***101***:23.3.4.4.1]

13.7.2.8.2.2 Other arrangements and positioning of smoke detectors shall be permitted to prevent damage or tampering, or for other purposes. [***101***:23.3.4.4.2]

13.7.2.8.2.2.1 Other arrangements, as specified in 13.7.2.8.2.2, shall be capable of detecting any fire, and the placement of detectors shall be such that the speed of detection is equivalent to that provided by the spacing and arrangements required by the installation standards referenced in 13.7. [***101***:23.3.4.4.2.1]

13.7.2.8.2.2.2 Detectors shall be permitted to be located in exhaust ducts from cells, behind grilles, or in other locations. [***101***:23.3.4.4.2.2]

13.7.2.8.2.2.3 The equivalent performance of the design permitted by 13.7.2.8.2.2.2 shall be acceptable to the AHJ in accordance with the equivalency concepts specified in Section 1.4. [***101***:23.3.4.4.2.3]

13.7.2.8.2.3* Smoke detectors shall not be required in Use Condition II open dormitories where staff is present within the dormitory whenever the dormitory is occupied, and the building is protected throughout by an approved, supervised automatic sprinkler system in accordance with Section 13.3. [***101***:23.3.4.4.3]

13.7.2.8.2.4 In smoke compartments protected throughout by an approved automatic sprinkler system in accordance with 13.3.2.12, smoke detectors shall not be required, except in corridors, common spaces, and sleeping rooms with more than four occupants. [***101***:23.3.4.4.4]

13.7.2.9 New Hotels and Dormitories.

13.7.2.9.1 General. A fire alarm system in accordance with 13.7.1 and NFPA *101*, except as modified by 28.3.4.2 through 28.3.4.5 of NFPA *101*, shall be provided. [***101***:28.3.4.1]

13.7.2.9.2 Detection. A corridor smoke detection system in accordance with Section 13.7 shall be provided in buildings other than those protected throughout by an approved, supervised automatic sprinkler system in accordance with 13.3.2.13. [***101***:28.3.4.4]

13.7.2.9.3* Smoke Alarms. An approved single-station smoke alarm shall be installed in accordance with 13.7.1.4.8 in every guest room and every living area and sleeping room within a guest suite. [***101***:28.3.4.5]

13.7.2.10 Existing Hotels and Dormitories.

13.7.2.10.1 General. A fire alarm system in accordance with 13.7.1 and NFPA *101*, except as modified by 29.3.4.2 through 29.3.4.5.2 of NFPA *101*, shall be provided in buildings other than those where each guest room has exterior exit access in accordance with 14.10.3 and the building does not exceed three stories in height. [***101***:29.3.4.1]

13.7.2.10.2* Smoke Alarms. An approved single-station smoke alarm shall be installed in accordance with 13.7.1.4.8 in every guest room and every living area and sleeping room within a guest suite. [***101***:29.3.4.5]

13.7.2.10.2.1 The smoke alarms shall not be required to be interconnected. [*101*:29.3.4.5.1]

13.7.2.10.2.2 Single-station smoke alarms without a secondary (standby) power source shall be permitted. [*101*:29.3.4.5.2]

13.7.2.11 New Apartment Buildings.

13.7.2.11.1 Apartment buildings with more than 3 stories or with more than 11 dwelling units, other than those meeting the requirements of 13.7.2.11.2 or 13.7.2.11.3, shall be provided with a fire alarm system in accordance with Section 13.7 and NFPA *101*, except as modified by 30.3.4.2 through 30.3.4.5.2 of NFPA *101*. [*101*:30.3.4.1.1]

13.7.2.11.2 A fire alarm system shall not be required in buildings where each dwelling unit is separated from other contiguous dwelling units by fire barriers (*see Section 8.3 of NFPA 101*) having a fire resistance rating of not less than 1 hour, and where each dwelling unit has either its own independent exit or its own independent stairway or ramp discharging at grade. [*101*:30.3.4.1.2]

13.7.2.11.3 A fire alarm system shall not be required in buildings that are protected throughout by an approved automatic sprinkler system in accordance with 13.3.2.15, that do not exceed 4 stories in height, and that contain not more than 16 dwelling units. [*101*:30.3.4.1.3]

13.7.2.11.4* Approved single-station smoke alarms shall be installed in accordance with 13.7.1.4.8 outside every sleeping area in the immediate vicinity of the bedrooms and on all levels of the dwelling unit, including basements. [*101*:30.3.4.5.1]

13.7.2.11.5 In buildings other than those protected throughout by an approved, supervised automatic sprinkler system installed in accordance with 13.3.2.15, approved single-station smoke alarms shall be installed in every sleeping room in accordance with 13.7.1.4.8. [*101*:30.3.4.5.2]

13.7.2.12 Existing Apartment Buildings.

13.7.2.12.1 Apartment buildings with more than 3 stories or with more than 11 dwelling units, other than those meeting the requirements of 13.7.2.12.2, shall be provided with a fire alarm system in accordance with Section 13.7 and NFPA *101*, except as modified by 31.3.4.2 through 31.3.4.5.2 of NFPA *101*. [*101*:31.3.4.1.1]

13.7.2.12.2 A fire alarm system shall not be required where each dwelling unit is separated from other contiguous dwelling units by fire barriers (*see Section 8.3 of NFPA 101*) having a fire resistance rating of not less than ½ hour, and where each dwelling unit has either its own independent exit or its own independent stairway or ramp discharging at grade. [*101*:31.3.4.1.2]

13.7.2.12.3 In buildings other than those equipped throughout with an existing, complete automatic smoke detection system, approved single-station smoke alarms shall be installed in accordance with 13.7.1.4.8, as modified by 13.7.2.12.4, outside every sleeping area in the immediate vicinity of the bedrooms and on all levels of the dwelling unit, including basements. [*101*:31.3.4.5.1]

13.7.2.12.4 Single-station smoke alarms without a secondary (standby) power source shall be permitted. [*101*:31.3.4.5.2]

13.7.2.13 Lodging and Rooming Houses. Lodging and rooming houses, other than those meeting 13.7.2.13.1, shall be provided with a fire alarm system in accordance with Section 13.7 and NFPA *101*. [*101*:26.3.4.1.1]

13.7.2.13.1 A fire alarm system in accordance with Section 13.7 shall not be required in existing lodging and rooming houses that have an existing smoke detection system meeting or exceeding the requirements of 26.3.4.5.1 of NFPA *101* where that detection system includes not less than one manual fire alarm box per floor arranged to initiate the smoke detection alarm. [*101*:26.3.4.1.2]

13.7.2.13.2 Smoke Alarms.

13.7.2.13.2.1 Approved single-station smoke alarms, other than existing smoke alarms meeting 13.7.2.13.2.3, shall be installed in accordance with 13.7.1.4.4 in every sleeping room. [*101*:26.3.4.5.1]

13.7.2.13.2.2 The smoke alarms required by 13.7.2.13.2.1 shall not be required to be interconnected. [*101*:26.3.4.5.2]

13.7.2.13.2.3 Existing battery-powered smoke alarms, rather than house electric-powered smoke alarms, shall be permitted where the facility has demonstrated to the AHJ that the testing, maintenance, and battery replacement programs will ensure reliability of power to the smoke alarms. [*101*:26.3.4.5.3]

13.7.2.14 One- and Two-Family Dwellings.

13.7.2.14.1 Detection, Alarm, and Communications Systems. Smoke alarms or a smoke detection system shall be provided in accordance with either 13.7.2.14.2 or 13.7.2.14.3, and NFPA *101*, as modified by 13.7.2.14.4. [*101*:24.3.4]

13.7.2.14.2 Smoke alarms shall be installed in accordance with 13.7.1.4.8 in the following locations:

(1) All sleeping rooms in other than existing one- and two-family dwellings
(2) Outside of each separate sleeping area, in the immediate vicinity of the sleeping rooms
(3) On each level of the dwelling unit, including basements [*101*:24.3.4.1]

13.7.2.14.3 Dwelling units shall be protected by an approved smoke detection system in accordance with Section 13.7 and equipped with an approved means of occupant notification. [*101*:24.3.4.2]

13.7.2.14.4 In existing one- and two-family dwellings, approved smoke alarms powered by batteries shall be permitted. [*101*:24.3.4.3]

13.7.2.15 New Residential Board and Care Occupancies.

13.7.2.15.1 Small Facilities with Sleeping Accommodations for Not More Than 16 Residents.

13.7.2.15.1.1 Fire Alarm Systems. A manual fire alarm system shall be provided in accordance with Section 13.7 and NFPA *101*. [*101*:32.2.3.4.1]

13.7.2.15.1.2 Smoke Alarms.

13.7.2.15.1.2.1 Approved smoke alarms shall be provided in accordance with 13.7.1.4.8. [*101*:32.2.3.4.3.1]

13.7.2.15.1.2.2 Smoke alarms shall be installed on all levels, including basements but excluding crawl spaces and unfinished attics. [*101*:32.2.3.4.3.2]

13.7.2.15.1.2.3 Additional smoke alarms shall be installed in all living areas, as defined in 3.3.17.5 in NFPA *101*. [*101*:32.2.3.4.3.3]

13.7.2.15.1.2.4 Each sleeping room shall be provided with an approved smoke alarm in accordance with 13.7.1.4.8. [*101*:32.2.3.4.3.4]

13.7.2.15.2 Large Facilities.

13.7.2.15.2.1 General. A fire alarm system shall be provided in accordance with Section 13.7 and NFPA *101*. [*101*:32.3.3.4.1]

13.7.2.15.2.2 Smoke Alarms. Approved smoke alarms shall be installed in accordance with 13.7.1.4.8 inside every sleeping room, outside every sleeping area in the immediate vicinity of the bedrooms, and on all levels within a resident unit. [*101*:32.3.3.4.7]

13.7.2.15.2.3 Smoke Detection Systems.

13.7.2.15.2.3.1 Corridors and spaces open to the corridors, other than those meeting 13.7.2.15.2.3.2, shall be provided with smoke detectors that comply with *NFPA 72* and are arranged to initiate an alarm that is audible in all sleeping areas. [*101*:32.3.3.4.8.1]

13.7.2.15.2.3.2 Smoke detection systems shall not be required in unenclosed corridors, passageways, balconies, colonnades, or other arrangements with one or more sides along the long dimension fully or extensively open to the exterior at all times. [*101*:32.3.3.4.8.3]

13.7.2.16 Existing Residential Board and Care Occupancies.

13.7.2.16.1 Small Facilities with Sleeping Accommodations for Not More Than 16 Residents.

13.7.2.16.1.1 Fire Alarm Systems. A manual fire alarm system shall be provided in accordance with Section 13.7 and NFPA *101*, unless the provisions of 13.7.2.16.1.2 or 13.7.2.16.1.3 are met. [*101*:33.2.3.4.1]

13.7.2.16.1.2 A fire alarm system shall not be required where interconnected smoke alarms complying with 13.7.2.16.1.4 and not less than one manual fire alarm box per floor arranged to continuously sound the smoke detector alarms are provided. [*101*:33.2.3.4.1.1]

13.7.2.16.1.3 Other manually activated continuously sounding alarms acceptable to the AHJ shall be permitted in lieu of a fire alarm system. [*101*:33.2.3.4.1.2]

13.7.2.16.1.4* Smoke Alarms.

13.7.2.16.1.4.1 Approved smoke alarms shall be provided in accordance with 13.7.1.4.8, unless otherwise indicated in 13.7.2.16.1.4.5 and 13.7.2.16.1.4.6. [*101*:33.2.3.4.3.1]

13.7.2.16.1.4.2 Smoke alarms shall be installed on all levels, including basements but excluding crawl spaces and unfinished attics. [*101*:33.2.3.4.3.2]

13.7.2.16.1.4.3 Additional smoke alarms shall be installed for living rooms, dens, day rooms, and similar spaces. [*101*:33.2.3.4.3.3]

13.7.2.16.1.4.4 Smoke alarms shall be powered from the building electrical system and, when activated, shall initiate an alarm that is audible in all sleeping areas. [*101*:33.2.3.4.3.5]

13.7.2.16.1.4.5 Smoke alarms in accordance with 13.7.2.16.1.4.1 shall not be required where buildings are protected throughout by an approved automatic sprinkler system, in accordance with 13.3.2.20.2.1, that uses quick-response or residential sprinklers, and are protected with approved smoke alarms installed in each sleeping room, in accordance with 13.7.1.4.8, that are powered by the building electrical system. [*101*:33.2.3.4.3.6]

13.7.2.16.1.4.6 Smoke alarms in accordance with 13.7.2.16.1.4.1 shall not be required where buildings are protected throughout by an approved automatic sprinkler system, in accordance with 13.3.2.20.2, that uses quick-response or residential sprinklers, with existing battery-powered smoke alarms in each sleeping room, and where, in the opinion of the AHJ, the facility has demonstrated that testing, maintenance, and a battery replacement program ensure the reliability of power to the smoke alarms. [*101*:33.2.3.4.3.7]

13.7.2.16.2 Large Facilities.

13.7.2.16.2.1 General. A fire alarm system in accordance with 13.7.1 and NFPA *101* shall be provided, unless each sleeping room has exterior exit access in accordance with 14.10.3 and the building is not more than three stories in height. [*101*:33.3.3.4.1]

13.7.2.16.2.2 Smoke Alarms. Smoke alarms shall be provided in accordance with 13.7.2.16.2.2.1, 13.7.2.16.2.2.2, or 13.7.2.16.2.2.3. [*101*:33.3.3.4.7]

13.7.2.16.2.2.1 Each sleeping room shall be provided with an approved smoke alarm in accordance with 13.7.1.4.8 that is powered from the building electrical system. [*101*:33.3.3.4.7.1]

13.7.2.16.2.2.2 Existing battery-powered smoke alarms, rather than building electrical service–powered smoke alarms, shall be accepted where, in the opinion of the AHJ, the facility has demonstrated that testing, maintenance, and battery replacement programs ensure the reliability of power to the smoke alarms. [*101*:33.3.3.4.7.2]

13.7.2.16.2.2.3 Sleeping room smoke alarms shall not be required in facilities having an existing corridor smoke detection system that complies with Section 13.7 and is connected to the building fire alarm system. [*101*:33.3.3.4.7.3]

13.7.2.16.2.3 Smoke Detection Systems.

13.7.2.16.2.3.1 All living areas, as defined in 3.3.17.5 of NFPA *101*, and all corridors shall be provided with smoke detectors that comply with *NFPA 72* and are arranged to initiate an alarm that is audible in all sleeping areas, as modified by 13.7.2.16.2.3.2 and 13.7.2.16.2.3.3. [*101*:33.3.3.4.8.1]

13.7.2.16.2.3.2 Smoke detection systems shall not be required in living areas in facilities protected throughout by an approved automatic sprinkler system installed in accordance with 13.3.2.20.1. [*101*:33.3.3.4.8.2]

13.7.2.16.2.3.3 Smoke detection systems shall not be required in unenclosed corridors, passageways, balconies, colonnades, or other arrangements with one or more sides along the long dimension fully or extensively open to the exterior at all times. [*101*:33.3.3.4.8.3]

13.7.2.17 New Mercantile Occupancies.

13.7.2.17.1 Class A mercantile occupancies shall be provided with a fire alarm system in accordance with 13.7.1 and NFPA *101*. [*101*:36.3.4.1]

13.7.2.17.2 Malls shall be provided with a fire alarm system in accordance with Section 13.7. [*101*:36.4.4.4.1]

13.7.2.17.3 Bulk merchandising retail buildings shall be provided with a fire alarm system in accordance with Section 13.7. [*101*:36.4.5.4.1]

13.7.2.18 Existing Mercantile Occupancies.

13.7.2.18.1 Class A mercantile occupancies shall be provided with a fire alarm system in accordance with Section 13.7 and NFPA *101*. [***101***:37.3.4.1]

13.7.2.18.2 Malls shall be provided with a fire alarm system in accordance with Section 13.7. [***101***:37.4.4.4.1]

13.7.2.18.3 Bulk merchandising retail buildings shall be provided with a fire alarm system in accordance with Section 13.7. [***101***:37.4.5.4.1]

13.7.2.19 New Business Occupancies. A fire alarm system in accordance with Section 13.7 and NFPA *101* shall be provided in all business occupancies where any one of the following conditions exists:

(1) The building is two or more stories in height above the level of exit discharge.
(2) The occupancy is subject to 50 or more occupants above or below the level of exit discharge.
(3) The occupancy is subject to 300 or more total occupants. [***101***:38.3.4.1]

13.7.2.20 Existing Business Occupancies. A fire alarm system in accordance with Section 13.7 and NFPA *101* shall be provided in all business occupancies where any one of the following conditions exists:

(1) The building is two or more stories in height above the level of exit discharge.
(2) The occupancy is subject to 100 or more occupants above or below the level of exit discharge.
(3) The occupancy is subject to 1000 or more total occupants. [***101***:39.3.4.1]

13.7.2.21 Industrial Occupancies. A fire alarm system shall be required in accordance with Section 13.7 and NFPA *101* for industrial occupancies, unless the total capacity of the building is under 100 persons and, of these, fewer than 25 persons are above or below the level of exit discharge. [***101***:40.3.4.1]

13.7.2.22 Storage Occupancies.

13.7.2.22.1 General. A fire alarm system shall be required in accordance with Section 13.7 and NFPA *101* for storage occupancies, except as modified by 13.7.2.22.1.1, 13.7.2.22.1.2, and 13.7.2.22.1.3. [***101***:42.3.4.1]

13.7.2.22.1.1 Storage occupancies limited to low hazard contents shall not be required to have a fire alarm system. [***101***:42.3.4.1.1]

13.7.2.22.1.2 Storage occupancies with ordinary or high hazard contents not exceeding an aggregate floor area of 100,000 ft^2 (9300 m^2) shall not be required to have a fire alarm system. [***101***:42.3.4.1.2]

13.7.2.22.1.3 Storage occupancies protected throughout by an approved automatic sprinkler system in accordance with Section 13.3 shall not be required to have a fire alarm system. [***101***:42.3.4.1.3]

13.7.2.22.2 A fire alarm system shall be required in accordance with Section 13.7 for parking structures, except as modified by 13.7.2.22.1.1, 13.7.2.22.1.2, and 13.7.2.22.1.3. [***101***:42.8.3.4.1]

13.7.2.22.2.1 Parking structures not exceeding an aggregate floor area of 100,000 ft^2 (9300 m^2) shall not be required to have a fire alarm system. [***101***:42.8.3.4.1.1]

13.7.2.22.2.2 Open parking structures shall not be required to have a fire alarm system. [***101***:42.8.3.4.1.2]

13.7.2.22.2.3 Parking structures protected throughout by an approved automatic sprinkler system in accordance with Section 13.3 shall not be required to have a fire alarm system. [***101***:42.8.3.4.1.3]

13.7.2.23 New Day-Care Occupancies.

13.7.2.23.1 Day-care occupancies, other than day-care occupancies housed in one room, shall be provided with a fire alarm system in accordance with Section 13.7 and NFPA *101*. [***101***:16.3.4.1]

13.7.2.23.2 Detection. A smoke detection system in accordance with Section 13.7 shall be installed in day-care occupancies, other than those housed in one room, and such system shall comply with both of the following:

(1) Detectors shall be installed on each story in front of the doors to the stairways and in the corridors of all floors occupied by the day-care occupancy.
(2) Detectors also shall be installed in lounges, recreation areas, and sleeping rooms in the day-care occupancy. [***101***:16.3.4.5]

13.7.2.23.3 Day-Care Homes.

13.7.2.23.3.1 Smoke alarms shall be installed within day-care homes in accordance with 13.7.1.4.8 and NFPA *101*. [***101***:16.6.3.4.1]

13.7.2.23.3.2 Where a day-care home is located within a building of another occupancy, such as in an apartment building or office building, any corridors serving the day-care home shall be provided with a smoke detection system in accordance with Section 13.7. [***101***:16.6.3.4.2]

13.7.2.23.3.3 One of the following shall be provided in all rooms used for sleeping:

(1) Single-station or multiple-station smoke alarms in accordance with 13.7.1.4.8 that are powered by the building electrical system
(2) System detectors with integral sounding devices in accordance with 9.6.1.3 of NFPA *101* [***101***:16.6.3.4.3]

13.7.2.24 Existing Day-Care Occupancies.

13.7.2.24.1 Day-care occupancies, other than day-care occupancies housed in one room, shall be provided with a fire alarm system in accordance with 13.7.1 and NFPA *101*. [***101***:17.3.4.1]

13.7.2.24.2 Detection. A smoke detection system in accordance with 13.7.1 shall be installed in day-care occupancies, other than those housed in one room or those housing clients capable of self-preservation where no sleeping facilities are provided, and such system shall comply with both of the following:

(1) Detectors shall be installed on each story in front of the doors to the stairways and in the corridors of all floors occupied by the day-care occupancy.
(2) Detectors shall be installed in lounges, recreation areas, and sleeping rooms in the day-care occupancy. [***101***:17.3.4.5]

13.7.2.24.3 Day-Care Homes.

13.7.2.24.3.1 Smoke alarms shall be installed within day-care homes in accordance with 13.7.1.4.8 and NFPA *101*. [***101***:17.6.3.4.1]

13.7.2.24.3.2 Where a day-care home is located within a building of another occupancy, such as in an apartment building or office building, any corridors serving the day-care home shall be provided with a smoke detection system in accordance with 13.7.1. [*101*:17.6.3.4.2]

13.7.2.24.3.3 One of the following shall be provided in all rooms used for sleeping:

(1) Single-station or multiple-station smoke alarms in accordance with 13.7.1.4.8 that are powered by the building electrical system
(2) System detectors with integral sounding devices in accordance with 13.7.1.4.9.1 [*101*:17.6.3.4.3]

13.7.2.24.3.4 Approved existing battery-powered smoke alarms, rather than house electrical service–powered smoke alarms required by 13.7.2.24.3.3, shall be permitted where the facility has testing, maintenance, and battery replacement programs that ensure reliability of power to the smoke alarms. [*101*:17.6.3.4.4]

13.7.2.25 New Ambulatory Health Care Occupancies. Ambulatory health care facilities shall be provided with fire alarm systems in accordance with Section 13.7 and NFPA *101*, except as modified by 20.3.4.2 through 20.3.4.4 of NFPA *101*. [*101*:20.3.4.1]

13.7.2.26 Existing Ambulatory Health Care Occupancies. Ambulatory health care facilities shall be provided with fire alarm systems in accordance with Section 13.7 and NFPA *101*, except as modified by 21.3.4.2 through 21.3.4.4 of NFPA *101*. [*101*:21.3.4.1]

13.7.2.27 Special Structures and High-Rise Buildings.

13.7.2.27.1 Detection, Alarm, and Communications Systems. Towers designed for occupancy by not more than three persons shall be exempt from requirements for detection, alarm, and communications systems. [*101*:11.3.3.4]

13.7.2.27.2 High-Rise Buildings.

13.7.2.27.2.1* A fire alarm system using an approved, emergency voice/alarm communication system shall be installed in accordance with Section 13.7 and NFPA *101*. [*101*:11.8.3.1]

13.7.2.27.2.2 Two-way telephone service shall be in accordance with 13.7.2.27.2.2.1 and 13.7.2.27.2.2.2. [*101*:11.8.3.2]

13.7.2.27.2.2.1 Two-way telephone communication service shall be provided for fire department use. This system shall be in accordance with *NFPA 72*. The communications system shall operate between the emergency command center and every elevator car, every elevator lobby, and each floor level of exit stairs. [*101*:11.8.3.2.1]

13.7.2.27.2.2.2 The requirement of 13.7.2.27.2.2.1 shall not apply where the fire department radio system is approved as an equivalent system. [*101*:11.8.3.2.2]

13.7.3 Fire Alarm Systems.

13.7.3.1 General.

13.7.3.1.1 Equipment. Equipment constructed and installed in conformity with this *Code* shall be listed for the purpose for which it is used. Fire alarm system components shall be installed in accordance with the manufacturers' installation instructions. [*72*:4.3.1]

13.7.3.1.2 Compatibility. All fire detection devices that receive their power from the initiating device circuit or signaling line circuit of a fire alarm control unit shall be listed for use with the control unit. [*72*:4.4.2]

13.7.3.2 Documentation.

13.7.3.2.1 Approval and Acceptance.

13.7.3.2.1.1 The AHJ shall be notified prior to installation or alteration of equipment or wiring. At the AHJ's request, complete information regarding the system or system alterations, including specifications, shop drawings, battery calculations, and notification appliance circuit voltage drop calculations shall be submitted for approval. [*72*:4.5.1.1]

13.7.3.2.1.2 Before requesting final approval of the installation, if required by the AHJ, the installing contractor shall furnish a written statement stating that the system has been installed in accordance with approved plans and tested in accordance with the manufacturer's specifications and the appropriate NFPA requirements. [*72*:4.5.1.2]

13.7.3.2.1.3* The record of completion form, Figure 4.5.2.1 of *NFPA 72*, shall be permitted to be a part of the written statement required in 13.7.3.2.1.2. When more than one contractor has been responsible for the installation, each contractor shall complete the portions of the form for which that contractor had responsibility. [*72*:4.5.1.3]

13.7.3.2.1.4 The record of completion form, Figure 4.5.2.1 of *NFPA 72*, shall be permitted to be a part of the documents that support the requirements of 13.7.3.2.1.3. [*72*:4.5.1.4]

13.7.3.2.2* Preparation. The preparation of a record of completion, Figure 4.5.2.1 of *NFPA 72*, shall be the responsibility of the qualified and experienced person described in 4.3.3 of *NFPA 72* and shall be in accordance with 13.7.3.2.2.1 and 13.7.3.2.2.2. [*72*:4.5.2.1]

13.7.3.2.2.1 Parts 1, 2, and 4 through 10 shall be completed after the system is installed and the installation wiring has been checked. Part 3 shall be completed after the operational acceptance tests have been completed. [*72*:4.5.2.1(A)]

13.7.3.2.2.2 A preliminary copy of the record of completion shall be given to the system owner and, if requested, to other AHJs after completion of the installation wiring tests. A final copy shall be provided after completion of the operational acceptance tests. [*72*:4.5.2.1(B)]

13.7.3.2.3 Revision. All fire alarm systems that are modified after the initial installation shall have the original record of completion revised to show all changes from the original information and shall include a revision date. [*72*:4.5.2.2]

13.7.3.2.4 Documentation Required. Every system shall include the following documentation, which shall be delivered to the owner or the owner's representative upon final acceptance of the system:

(1)*An owner's manual and installation instructions covering all system equipment
(2) Record drawings
(3) For software-based systems, a record copy of the site-specific software [*72*:4.5.2.3]

13.7.3.2.5* Verification of Compliant Installation. Where required, compliance of the completed installation with the requirements of this *Code* and *NFPA 72*, as implemented via the referring code(s), specifications, and/or other criteria applicable to the specific installation, shall be certified by a qualified and impartial third-party organization acceptable to the AHJ. [*72*:4.5.2.4]

13.7.3.2.5.1 At a minimum, the verification shall ensure that the installed system includes all required components and functions, that those components and functions are installed and operate as required, that the system has been 100-percent acceptance tested in accordance with Chapter 10 of *NFPA 72*, and that all required documentation has been provided to the system owner. For supervising station systems, the verification shall also ascertain proper arrangement, transmission, and receipt of all signals required to be transmitted off-premises.

Exception: Where the installation is an extension, modification, or reconfiguration of an existing system, the verification shall be required for the new work only and reacceptance testing in accordance with Chapter 10 of NFPA 72 shall be acceptable. [72:4.5.2.4.1]

13.7.3.2.5.2 Verification shall include confirmation that any required corrective actions have been completed. [*72*:4.5.2.4.2]

13.7.3.2.6 Records.

13.7.3.2.6.1 A complete, unalterable record of the tests and operations of each system shall be kept until the next test and for 1 year thereafter. [*72*:4.5.3.1]

13.7.3.2.6.2 The record shall be available for examination and, if required, reported to the AHJ. Archiving of records by any means shall be permitted if hard copies of the records can be provided promptly when requested. [*72*:4.5.3.2]

13.7.3.2.6.3 If off-premises monitoring is provided, records of all signals, tests, and operations recorded at the supervising station shall be maintained for not less than 1 year. [*72*:4.5.3.3]

13.7.3.2.7* Testing Frequency. Testing shall be performed in accordance with the schedules in Table 13.7.3.2.7, except as modified in other paragraphs of 13.7.3.2, or more often if required by the AHJ.

Exception: Devices or equipment that are inaccessible for safety considerations (e.g., continuous process operations, energized electrical equipment, radiation, and excessive height) shall be tested during scheduled shutdowns if approved by the AHJ but shall not be tested more than every 18 months. [72:10.4.3]

13.7.3.2.7.1 If automatic testing is performed at least weekly by a remotely monitored fire alarm control unit specifically listed for the application, the manual testing frequency shall be permitted to be extended to annually. Table 13.7.3.2.7 shall apply. [*72*:10.4.3.1]

13.7.3.3 Manually Actuated Alarm-Initiating Devices.

13.7.3.3.1 Manual fire alarm boxes shall be used only for fire alarm-initiating purposes. [*72*:5.12.1]

13.7.3.3.2 Combination manual fire alarm boxes and guard's signaling stations shall be permitted. [*72*:5.12.2]

13.7.3.3.3 Each manual fire alarm box shall be securely mounted. [*72*:5.12.3]

13.7.3.3.4 The operable part of each manual fire alarm box shall be not less than 3½ ft (1.1 m) and not more than 4½ ft (1.37 m) above floor level. [*72*:5.12.4]

13.7.3.3.5* Manual fire alarm boxes shall be located throughout the protected area so that they are conspicuous, unobstructed, and accessible. [*72*:5.12.5]

13.7.3.3.6 Manual fire alarm boxes shall be located within 5 ft (1.5 m) of the exit doorway opening at each exit on each floor. [*72*:5.12.6]

13.7.3.3.7 Manual fire alarm boxes shall be mounted on both sides of grouped openings over 40 ft (12.2 m) in width, and within 5 ft (1.5 m) of each side of the opening. [*72*:5.12.7]

13.7.3.3.8* Additional manual fire alarm boxes shall be provided so that the travel distance to the nearest fire alarm box will not be in excess of 200 ft (61 m) measured horizontally on the same floor. [*72*:5.12.8]

13.7.3.4 Certificated or Placarded. The prime contractor shall conspicuously indicate that the fire alarm system providing service at a protected premises complies with all the requirements of this *Code* by providing a means of third-party verification, as specified in 13.7.3.4.1 or 13.7.3.4.2. [*72*:8.2.4]

13.7.3.4.1 The installation shall be certificated. [*72*:8.2.4.1]

13.7.3.4.1.1 Fire alarm systems providing service that complies with all the requirements of this *Code* shall be certificated by the organization that has listed the central station. [*72*:8.2.4.1.1]

13.7.3.4.1.2 A document attesting to certification shall be located on or within 36 in. (1 m) of the fire alarm system control unit or, if no control unit exists, on or within 36 in. (1 m) of a fire alarm system component. [*72*:8.2.4.1.2]

13.7.3.4.1.3 A central repository of issued certification documents, accessible to the AHJ, shall be maintained by the organization that listed the central station. [*72*:8.2.4.1.3]

13.7.3.4.2 The installation shall be placarded. [*72*:8.2.4.2]

13.7.3.4.2.1 Fire alarm systems providing service that complies with all the requirements of this *Code* shall be conspicuously marked by the central station to indicate compliance. [*72*:8.2.4.2.1]

13.7.3.4.2.2 The marking shall be by one or more placards that meet the requirements of the organization that listed the central station and requires the placard. [*72*:8.2.4.2.2]

13.7.3.4.2.3 The placard(s) shall be 20 in.^{2} (130 cm^2) or larger, shall be located on or within 36 in. (1 m) of the fire alarm system control unit or, if no control unit exists, on or within 36 in. (1 m) of a fire alarm system component, and shall identify the central station by name and telephone number. [*72*:8.2.4.2.3]

13.7.3.4.2.4 Fire alarm system service that does not comply with all the requirements of Section 8.2 of *NFPA 72* shall not be designated as central station service. [*72*:8.2.4.3]

13.7.3.4.2.5 For the purpose of Section 8.2 of *NFPA 72*, the subscriber shall notify the prime contractor, in writing, of the identity of the AHJs. [*72*:8.2.4.4]

13.7.3.5 Automatic Fire Detection and Alarm Service.

13.7.3.5.1 Automatic fire detectors shall be located, maintained, and tested in accordance with *NFPA 72*.

13.7.3.5.2 Automatic Fire Alarm Signal Initiation — Initiating Devices with Integral Trouble Contacts. Automatic fire alarm signal initiation devices that have integral trouble signal contacts shall be connected to the initiating device circuit so that a trouble condition within a device does not impair alarm transmission from any other initiating device.

Exception: Where the trouble condition is caused by electrical disconnection of the device or by removing the initiating device from its plug-in base. [72:6.8.5.3]

Table 13.7.3.2.7 Testing Frequencies

	Component	Initial/ Reacceptance	Monthly	Quarterly	Semiannually	Annually	*NFPA 72* Table 10.4.2.2 Reference
1.	Control Equipment — Building Systems Connected to Supervising Station						1, 7, 16, 17
	(a) Functions	X	—	—	—	X	—
	(b) Fuses	X	—	—	—	X	—
	(c) Interfaced equipment	X	—	—	—	X	—
	(d) Lamps and LEDs	X	—	—	—	X	—
	(e) Primary (main) power supply	X	—	—	—	X	—
	(f) Transponders	X	—	—	—	X	—
2.	Control Equipment — Building Systems Not Connected to a Supervising Station	—	—	—	—	—	1
	(a) Functions	X	—	X	—	—	—
	(b) Fuses	X	—	X	—	—	—
	(c) Interfaced equipment	X	—	X	—	—	—
	(d) Lamps and LEDs	X	—	X	—	—	—
	(e) Primary (main) power supply	X	—	X	—	—	—
	(f) Transponders	X	—	X	—	—	—
3.	Engine-Driven Generator — Central Station Facilities and Fire Alarm Systems	X	X	—	—	—	—
4.	Engine-Driven Generator — Public Fire Alarm Reporting Systems	X (weekly)	—	—	—	—	—
5.	Batteries — Central Station Facilities						
	(a) Lead-acid type	—	—	—	—	—	6b
	1. Charger test (replace battery as needed.)	X	—	—	—	X	—
	2. Discharge test (30 minutes)	X	X	—	—	—	—
	3. Load voltage test	X	X	—	—	—	—
	4. Specific gravity	X	—	—	X	—	—
	(b) Nickel-cadmium type	—	—	—	—	—	6c
	1. Charger test (replace battery as needed.)	X	—	X	—	—	—
	2. Discharge test (30 minutes)	X	—	—	—	X	—
	3. Load voltage test	X	—	—	—	X	—
	(c) Sealed lead-acid type	X	X	—	—	—	6d
	1. Charger test (replace battery within 5 years after manufacture or more frequently as needed.)	—	X	X	—	—	—
	2. Discharge test (30 minutes)	X	X	—	—	—	—
	3. Load voltage test	X	X	—	—	—	—
6.	Batteries — Fire Alarm Systems						
	(a) Lead-acid type	—	—	—	—	—	6b
	1. Charger test (replace battery as needed.)	X	—	—	—	X	—
	2. Discharge test (30 minutes)	X	—	—	X	—	—
	3. Load voltage test	X	—	—	X	—	—
	4. Specific gravity	X	—	—	X	—	—
	(b) Nickel-cadmium type	—	—	—	—	—	6c
	1. Charger test (replace battery as needed.)	X	—	—	—	X	—
	2. Discharge test (30 minutes)	X	—	—	—	X	—
	3. Load voltage test	X	—	—	X	—	—
	(c) Primary type (dry cell)	—	—	—	—	—	6a
	1. Load voltage test	X	X	—	—	—	—
	(d) Sealed lead-acid type	—	—	—	—	—	6d
	1. Charger test (replace battery within 5 years after manufacture or more frequently as needed.)	X	—	—	—	X	—
	2. Discharge test (30 minutes)	X	—	—	—	X	—
	3. Load voltage test	X	—	—	X	—	—
7.	Batteries — Public Fire Alarm Reporting Systems Voltage tests in accordance with Table 10.4.2.2 of *NFPA 72*, items 7(1)–(6)	X (daily)	—	—	—	—	—
	(a) Lead-acid type	—	—	—	—	—	6b
	1. Charger test (replace battery as needed.)	X	—	—	—	X	—
	2. Discharge test (2 hours)	X	—	X	—	—	—
	3. Load voltage test	X	—	X	—	—	—
	4. Specific gravity	X	—	—	X	—	—
	(b) Nickel-cadmium type	—	—	—	—	—	6c
	1. Charger test (replace battery as needed.)	X	—	—	—	X	—
	2. Discharge test (2 hours)	X	—	—	—	X	—
	3. Load voltage test	X	—	X	—	—	—

Table 13.7.3.2.7 ***Continued***

	Component	Initial/ Reacceptance	Monthly	Quarterly	Semiannually	Annually	*NFPA 72* Table 10.4.2.2 Reference
	(c) Sealed lead-acid type	—	—	—	—	—	6d
	1. Charger test (replace battery within 5 years after manufacture or more frequently as needed.)	X	—	—	—	X	—
	2. Discharge test (2 hours)	X	—	—	—	X	—
	3. Load voltage test	X	—	X	—	—	—
8.	Fiber-Optic Cable Power	X	—	—	—	X	12b
9.	Control Unit Trouble Signals	X	—	—	—	X	9
10.	Conductors — Metallic	X	—	—	—	—	11
11.	Conductors — Nonmetallic	X	—	—	—	—	12
12.	Emergency Voice/Alarm Communications Equipment	X	—	—	—	X	18
13.	Retransmission Equipment (The requirements of 10.4.7 of *NFPA 72* shall apply.)	X	—	—	—	—	—
14.	Remote Annunciators	X	—	—	—	X	10
15.	Initiating Devices	—	—	—	—	—	13
	(a) Duct detectors	X	—	—	—	X	—
	(b) Electromechanical releasing device	X	—	—	—	X	—
	(c) Fire extinguishing system(s) or suppression system(s) switches	X	—	—	—	X	—
	(d) Fire–gas and other detectors	X	—	—	—	X	—
	(e) Heat detectors (The requirements of 10.4.3.4 of *NFPA 72* shall apply.)	X	—	—	—	X	—
	(f) Fire alarm boxes	X	—	—	—	X	—
	(g) Radiant energy fire detectors	X	—	—	X	—	—
	(h) System smoke detectors — functional	X	—	—	—	X	—
	(i) Smoke detectors — sensitivity (The requirements of 10.4.3.2 of *NFPA 72* shall apply.)	—	—	—	—	—	—
	(j) Single- and multiple-station smoke alarms (The requirements for monthly testing in accordance with 10.4.4 of *NFPA 72* shall also apply.)	X	—	—	—	X	—
	(k) Single- and multiple-station heat alarms	X	—	—	—	X	—
	(l) Supervisory signal devices (except valve tamper switches)	X	—	X	—	—	—
	(m) Waterflow devices	X	—	—	X	—	—
	(n) Valve tamper switches	X	—	—	X	—	—
16.	Guard's Tour Equipment	X	—	—	—	X	—
17.	Interface Equipment	X	—	—	—	X	19
18.	Special Hazard Equipment	X	—	—	—	X	15
19.	Alarm Notification Appliances	—	—	—	—	—	14
	(a) Audible devices	X	—	—	—	X	—
	(b) Audible textual notification appliances	X	—	—	—	X	—
	(c) Visible devices	X	—	—	—	X	—
20.	Off-Premises Transmission Equipment	X	—	X	—	—	—
21.	Supervising Station Fire Alarm Systems — Transmitters	—	—	—	—	—	16
	(a) DACT	X	—	—	—	X	—
	(b) DART	X	—	—	—	X	—
	(c) McCulloh	X	—	—	—	X	—
	(d) RAT	X	—	—	—	X	—
22.	Special Procedures	X	—	—	—	X	21
23.	Supervising Station Fire Alarm Systems — Receivers	—	—	—	—	—	17
	(a) DACR	X	X	—	—	—	—
	(b) DARR	X	X	—	—	—	—
	(c) McCulloh systems	X	X	—	—	—	—
	(d) Two-way RF multiplex	X	X	—	—	—	X
	(e) RASSR	X	X	—	—	—	—
	(f) RARSR	X	X	—	—	—	—
	(g) Private microwave	X	X	—	—	—	—

[*72*:Table 10.4.3]

13.7.3.5.3* Systems equipped with alarm verification features shall be permitted, under the following conditions:

(1) The alarm verification feature is not initially enabled unless conditions or occupant activities that are expected to cause nuisance alarms are anticipated in the area that is protected by the smoke detectors. Enabling of the alarm verification feature shall be protected by password or limited access.
(2) A smoke detector that is continuously subjected to a smoke concentration above alarm threshold does not delay the system functions of 4.4.3, 6.8.1.1, or 6.15.2.1 of *NFPA 72* by more than 1 minute.
(3) Actuation of an alarm-initiating device other than a smoke detector causes the system functions of 4.4.3, 6.8.1.1, or 6.15.2.1 of *NFPA 72* without additional delay.
(4) The current status of the alarm verification feature is shown on the record of completion. *(See Figure 4.5.2.1, item 10 of NFPA 72.)* [*72*:6.8.5.4.1]

13.7.3.5.4 If automatic drift compensation of sensitivity for a fire detector is provided, the control unit shall identify the affected detector when the limit of compensation is reached. [*72*:6.8.5.4.2]

13.7.3.5.5 Systems that require the operation of two automatic detectors to initiate the alarm response shall be permitted provided the following conditions are satisfied:

(1) The systems are not prohibited by the AHJ.
(2) At least two automatic detectors are in each protected space.
(3) The alarm verification feature is not used. [*72*:6.8.5.4.3]

13.7.3.5.6 For systems that require the operation of two automatic detectors to initiate fire safety functions or to actuate fire extinguishing or suppression systems, the detectors shall be installed at the spacing determined in accordance with Chapter 5 of *NFPA 72*. [*72*:6.8.5.4.4]

13.7.3.5.7 For systems that require the operation of two automatic detectors to actuate public mode notification, the detectors shall be installed at a linear spacing not more than 0.7 times the linear spacing determined in accordance with Chapter 5 of *NFPA 72*. [*72*:6.8.5.4.5]

13.7.3.6 Alarm Signal Initiation and Water Flow.

13.7.3.6.1 A dry-pipe or preaction sprinkler system supplied with water by a connection beyond the alarm-initiating device of a wet-pipe system shall be equipped with a separate waterflow alarm-initiating pressure switch or other approved means to initiate a waterflow alarm. [*72*:6.8.5.5.1]

13.7.3.6.2 The number of waterflow switches permitted to be connected to a single initiating device circuit shall not exceed five. [*72*:6.8.5.5.2]

13.7.3.6.3 Automatic fire suppression system alarm-initiating devices and supervisory signal-initiating devices and their circuits shall be designed and installed so that they cannot be subject to tampering, opening, or removal without initiating a signal. This provision shall include junction boxes installed outside of buildings to facilitate access to the initiating device circuit.

Exception No. 1: Covers of junction boxes inside of buildings.

Exception No. 2: Tamperproof screws or other approved mechanical means shall be permitted for preventing access to junction boxes installed outside buildings. [72:6.8.5.10.1]

13.7.3.6.4 The number of supervisory devices permitted to be connected to a single initiating device circuit shall not exceed 20. [*72*:6.8.5.7.2]

13.7.3.6.5* Initiation of the alarm signal shall occur within 90 seconds of waterflow at the alarm-initiating device when flow occurs that is equal to or greater than that from a single sprinkler of the smallest orifice size installed in the system. [*72*:5.10.2]

13.7.3.7* Monitoring Integrity of Installation Conductors and Other Signaling Channels. Unless otherwise permitted or required by 13.7.3.7.1.1 through 13.7.3.7.1.13, all means of interconnecting equipment, devices, and appliances and wiring connections shall be monitored for the integrity of the interconnecting conductors or equivalent path so that the occurrence of a single open or a single ground-fault condition in the installation conductors or other signaling channels and their restoration to normal shall be automatically indicated within 200 seconds. [*72*:4.4.7.1]

13.7.3.7.1 Monitoring for integrity shall not be required for styles of initiating device circuits, signaling line circuits, and notification appliance circuits tabulated in Table 6.5, Table 6.6.1, and Table 6.7 of *NFPA 72* that do not have an "X" under "Trouble" for the abnormal condition indicated. [*72*:4.4.7.1.1]

13.7.3.7.2 Shorts between conductors, other than as required by 13.7.3.7.6, 13.7.3.7.15, and 4.4.7.2.2 and Table 6.5, Table 6.6.1, and Table 6.7 of *NFPA 72*, shall not be required to monitored. [*72*:4.4.7.1.2]

13.7.3.7.3 Monitoring for integrity shall not be required for a noninterfering shunt circuit, provided that a fault circuit condition on the shunt circuit wiring results only in the loss of the noninterfering feature of operation. [*72*:4.4.7.1.3]

13.7.3.7.3.1 Monitoring for integrity shall not be required for connections to and between supplementary system components, provided that single open, ground, or short-circuit conditions of the supplementary equipment or interconnecting means, or both, do not affect the required operation of the fire alarm system. [*72*:4.4.7.1.4]

13.7.3.7.3.2 Monitoring for integrity shall not be required for the circuit of an alarm notification appliance installed in the same room with the central control equipment, provided that the notification appliance circuit conductors are installed in conduit or are equivalently protected against mechanical injury. [*72*:4.4.7.1.5]

13.7.3.7.4 Monitoring for integrity shall not be required for a trouble signal circuit. [*72*:4.4.7.1.6]

13.7.3.7.5* Monitoring for integrity shall not be required for the interconnection between listed equipment within a common enclosure. [*72*:4.4.7.1.7]

13.7.3.7.6 Monitoring for integrity shall not be required for the interconnection between enclosures containing control equipment located within 20 ft (6 m) of each other where the conductors are installed in conduit or equivalently protected against mechanical injury. [*72*:4.4.7.1.8]

13.7.3.7.7 Monitoring for integrity shall not be required for the conductors for ground detection where a single ground does not prevent the required normal operation of the system. [*72*:4.4.7.1.9]

13.7.3.7.8 Monitoring for integrity shall not be required for central station circuits serving notification appliances within a central station. [*72*:4.4.7.1.10]

13.7.3.7.9 Monitoring for integrity shall not be required for pneumatic rate-of-rise systems of the continuous line type in which the wiring terminals of such devices are connected in multiple across electrically supervised circuits. [*72*:4.4.7.1.11]

13.7.3.7.10 Monitoring for integrity shall not be required for the interconnecting wiring of a stationary computer and the computer's keyboard, video monitor, mouse-type device, or touch screen, so long as the interconnecting wiring does not exceed 8 ft (2.4 m) in length; is a listed computer/data processing cable as permitted by NFPA 70; and failure of cable does not cause the failure of the required system functions not initiated from the keyboard, mouse, or touch screen. [*72*:4.4.7.1.12]

13.7.3.7.11 Monitoring for integrity of the installation conductors for a ground-fault condition shall not be required for the communications and transmission channels extending from a supervising station to a subsidiary station(s) or protected premises, or both, which comply with the requirements of Chapter 8 of *NFPA 72* and are electrically isolated from the fire alarm system (or circuits) by a transmitter(s), provided that a single ground condition does not affect the required operation of the fire alarm system. [*72*:4.4.7.1.13]

13.7.3.7.12 Interconnection means shall be arranged so that a single break or single ground fault does not cause an alarm signal. [*72*:4.4.7.1.14]

13.7.3.7.13 Unacknowledged alarm signals shall not be interrupted if a fault on an initiating device circuit or a signaling line circuit occurs while there is an alarm condition on that circuit. [*72*:4.4.7.1.15]

Exception: Circuits used to interconnect fire alarm control panels.

13.7.3.7.14 An open, ground, or short-circuit fault on the installation conductors of one alarm notification appliance circuit shall not affect the operation of any other alarm notification circuit. [*72*:4.4.7.1.16]

13.7.3.7.15 Unless otherwise permitted or required by 13.7.3.7.15.1 through 13.7.3.7.15.3, the occurrence of a wire-to-wire short-circuit fault on any alarm notification appliance circuit shall result in a trouble signal at the protected premises. [*72*:4.4.7.1.17]

13.7.3.7.15.1 A trouble signal shall not be required for a circuit employed to produce a supplementary local alarm signal, provided that the occurrence of a short circuit on the circuit in no way affects the required operation of the fire alarm system. [*72*:4.4.7.1.17.1]

13.7.3.7.15.2 A trouble signal shall not be required for the circuit of an alarm notification appliance installed in the same room with the central control equipment, provided that the notification appliance circuit conductors are installed in conduit or are equivalently protected against mechanical injury. [*72*:4.4.7.1.17.2]

13.7.3.7.15.3 A trouble signal shall not be required for central station circuits serving notification appliances within a central station. [*72*:4.4.7.1.17.3]

13.7.3.8* At least two independent and reliable power supplies shall be provided, one primary and one secondary, each of which shall be of adequate capacity for the application. [*72*:4.4.1.3.1]

13.7.4 Automatic Fire Detectors.

13.7.4.1 Installation.

13.7.4.1.1 Where subject to mechanical damage, an initiating device shall be protected. A mechanical guard used to protect a smoke or heat detector shall be listed for use with the detector. [*72*:5.4.2]

13.7.4.1.2 Initiating devices shall be supported independently of their attachment to the circuit conductors. [*72*:5.4.3]

13.7.4.1.2.1 Initiating devices shall be installed in a manner that provides accessibility for periodic maintenance. [*72*:5.4.4]

13.7.4.1.2.2 Initiating devices shall be installed in all areas, compartments, or locations where required by other NFPA codes and standards or as required by the AHJ. [*72*:5.4.5]

13.7.4.1.2.3* Duplicate terminals, leads, or connectors that provide for the connection of installation wiring shall be provided on each initiating device for the express purpose of connecting into the fire alarm system to monitor the integrity of the signaling and power wiring.

Exception: Initiating devices connected to a system that provides the required monitoring. [72:5.4.6]

13.7.4.1.3 Duct Detector Installation.

13.7.4.1.3.1 Smoke detectors shall be installed, tested, and maintained in accordance with *NFPA 72*. [**90A**:6.4.4.1]

13.7.4.1.3.2 In addition to the requirements of 6.4.3 of NFPA 90A, *Standard for the Installation of Air-Conditioning and Ventilating Systems*, where an approved fire alarm system is installed in a building, the smoke detectors required by the provisions of Section 6.4 of NFPA 90A shall be connected to the fire alarm system in accordance with the requirements of *NFPA 72*. [**90A**:6.4.4.2]

13.7.4.1.3.2.1 Smoke detectors used solely for closing dampers or for heating, ventilating, and air-conditioning system shutdown shall not be required to activate the building evacuation alarm. [**90A**:6.4.4.2.1]

13.7.4.1.3.3 Where smoke detectors required by Section 6.4 of NFPA 90A are installed in a building not equipped with an approved fire alarm system as specified by 13.7.4.1.3.2, the following shall occur:

(1) Smoke detector activation required by Section 6.4 of NFPA 90A shall cause a visual and audible signal in a normally occupied area.
(2) Smoke detector trouble conditions shall be indicated visually or audibly in a normally occupied area and shall be identified as air duct detector trouble. [**90A**:6.4.4.3]

13.7.4.1.3.4 Smoke detectors powered separately from the fire alarm system for the sole function of stopping fans shall not require standby power. [**90A**:6.4.4.4]

13.7.4.2 Requirements for Smoke and Heat Detectors.

13.7.4.2.1 Recessed Mounting. Unless tested and listed for recessed mounting, detectors shall not be recessed into the mounting surface. [*72*:5.5.1]

13.7.4.3 Location.

13.7.4.3.1 Unless otherwise modified by 13.7.4.3.2 or 13.7.4.3.3, spot-type heat-sensing fire detectors shall be located on the ceiling not less than 4 in. (100 mm) from the sidewall or on the sidewalls between 4 in. and 12 in. (100 mm and 300 mm) from the ceiling. [*72*:5.6.3.1]

13.7.4.3.2* In the case of solid joist construction, detectors shall be mounted at the bottom of the joists. [*72*:5.6.3.1.1]

13.7.4.3.3 In the case of beam construction where beams are less than 12 in. (300 mm) in depth and less than 8 ft (2.4 m) on center, detectors shall be permitted to be installed on the bottom of beams. [*72*:5.6.3.1.2]

13.7.4.3.4 Unless otherwise modified by 13.7.4.3.4.1 through 13.7.4.3.4.3, line-type heat detectors shall be located on the ceiling or on the sidewalls not more than 20 in. (500 mm) from the ceiling. [*72*:5.6.3.2]

13.7.4.3.4.1 In the case of solid joist construction, detectors shall be mounted at the bottom of the joists. [*72*:5.6.3.2.1]

13.7.4.3.4.2 In the case of beam construction where beams are less than 12 in. (300 mm) in depth and less than 8 ft (2.4 m) on center, detectors shall be permitted to be installed on the bottom of beams. [*72*:5.6.3.2.2]

13.7.4.3.4.3 Where a line-type detector is used in an application other than open area protection, the manufacturer's installation instructions shall be followed. [*72*:5.6.3.2.3]

13.7.4.3.5* Spot-type smoke detectors shall be located on the ceiling not less than 4 in. (100 mm) from a sidewall to the near edge or, if on a sidewall, between 4 in. and 12 in. (100 mm and 300 mm) down from the ceiling to the top of the detector. [*72*:5.7.3.2.1]

13.7.4.3.6* To minimize dust contamination, smoke detectors, where installed under raised floors, shall be mounted only in an orientation for which they have been listed. [*72*:5.7.3.2.2]

13.7.4.3.7 Projected beam–type smoke detectors shall be located in accordance with the manufacturer's documented instructions. [*72*:5.7.3.4.1]

13.7.4.3.8 The effects of stratification shall be evaluated when locating the detectors. [*72*:5.7.3.4.2]

13.7.4.3.9 Detectors shall not be installed until after the construction cleanup of all trades is complete and final.

Exception: Where required by the AHJ for protection during construction. Detectors that have been installed during construction and found to have a sensitivity outside the listed and marked sensitivity range shall be cleaned or replaced in accordance with Chapter 10 of NFPA 72 at completion of construction. [72:5.7.1.11]

13.7.4.3.10 Ceiling Tiles and Ceiling Assemblies. Where automatic detectors are installed, ceilings necessary for the proper actuation of the fire protection device in accordance with *NFPA 72* shall be maintained.

13.7.4.3.11 High Air Movement Areas.

13.7.4.3.11.1 Location. Smoke detectors shall not be located directly in the airstream of supply registers. [*72*:5.7.5.3.2]

13.7.4.3.11.2* Spacing. Smoke detector spacing shall be in accordance with Table 5.7.5.3.3 and Figure 5.7.5.3.3 of *NFPA 72*.

Exception: Air-sampling or projected beam smoke detectors installed in accordance with the manufacturer's documented instructions. [72:5.7.5.3.3]

13.7.4.4 Inspection, Maintenance and Testing.

13.7.4.4.1 The inspection, maintenance, and testing for fire alarm and fire detection systems shall be in accordance with Chapter 7 of *NFPA 72*.

13.7.4.5 Heat Detectors.

13.7.4.5.1 Fixed-Temperature, Rate-of-Rise, Rate-of-Compensation, Restorable Line, Spot Type (Excluding Pneumatic Tube Type). Heat test shall be performed with a heat source per the manufacturer's recommendations for response within 1 minute. A test method shall be used that is recommended by the manufacturer or other method shall be used that will not damage the nonrestorable fixed-temperature element of a combination rate-of-rise/fixed-temperature element detector. [*72*:Table 10.4.2.2, 13, d, 1]

13.7.4.5.2 Fixed-Temperature, Nonrestorable Line Type. Heat test shall not be performed. Functionality shall be tested mechanically and electrically. Loop resistance shall be measured and recorded. Changes from acceptance test shall be investigated. [*72*:Table 10.4.2.2, 13, d, 2)

13.7.4.5.3 Nonrestorable (General). Heat tests shall not be performed. Functionality shall be tested mechanically and electrically. [*72*:Table 10.4.2.2, 13, d, 4)

13.7.4.5.4 Restorable Line Type, Pneumatic Tube Only. Heat tests shall be performed (where test chambers are in circuit) or a test with pressure pump shall be conducted. [*72*:Table 10.4.2.2, 13, d, 5)

13.7.4.6 Smoke Detectors.

13.7.4.6.1 Systems Detectors and Single-Station Smoke Alarms Used in Other than One- and Two-Family Dwellings. The detectors shall be tested in place to ensure smoke entry into the sensing chamber and an alarm response. Testing with smoke or listed aerosol approved by the manufacturer shall be permitted as acceptable test methods. Other methods approved by the manufacturer that ensure smoke entry into the sensing chamber shall be permitted. Any of the following tests shall be performed to ensure that each smoke detector is within its listed and marked sensitivity range:

(1) Calibrated test method
(2) Manufacturer's calibrated sensitivity test instrument
(3) Listed control equipment arranged for the purpose
(4) Smoke detector/control unit arrangement whereby the detector causes a signal at the control unit when its sensitivity is outside its listed sensitivity range
(5) Other calibrated sensitivity test method approved by the AHJ [*72*:Table 10.4.2.2, 13, g, 1]

13.7.4.6.2 Projected Beam Type. The detector shall be tested by introducing smoke, other aerosol, or an optical filter into the beam path. [*72*:Table 10.4.2.2, 13, g, 5]

13.7.4.6.3 A functional test shall be performed on all smoke detectors upon initial installation, during reacceptance tests, and at least annually as required by Table 13.7.3.2.7. [*72*:Table 10.4.3, 15, h]

13.7.4.7* Sensitivity of smoke detectors and single- and multiple-station smoke alarms in other than one- and two-family dwellings shall be tested in accordance with 13.7.4.7.1 through 13.7.4.7.6. [*72*:10.4.3.2]

13.7.4.7.1 Sensitivity shall be checked within 1 year after installation. [*72*:10.4.3.2.1]

13.7.4.7.2 Sensitivity shall be checked every alternate year thereafter unless otherwise permitted by compliance with 13.7.4.7.3. [*72*:10.4.3.2.2]

13.7.4.7.3 After the second required calibration test, if sensitivity tests indicate that the device has remained within its listed and marked sensitivity range (or 4 percent obscuration light gray smoke, if not marked), the length of time between calibration tests shall be permitted to be extended to a maximum of 5 years. [*72*:10.4.3.2.3]

13.7.4.7.3.1 If the frequency is extended, records of nuisance alarms and subsequent trends of these alarms shall be maintained. [*72*:10.4.3.2.3.1]

13.7.4.7.3.2 In zones or in areas where nuisance alarms show any increase over the previous year, calibration tests shall be performed. [*72*:10.4.3.2.3.2]

13.7.4.7.4 To ensure that each smoke detector or smoke alarm is within its listed and marked sensitivity range, it shall be tested using any of the following methods:

(1) Calibrated test method
(2) Manufacturer's calibrated sensitivity test instrument
(3) Listed control equipment arranged for the purpose
(4) Smoke detector/control unit arrangement whereby the detector causes a signal at the control unit where its sensitivity is outside its listed sensitivity range
(5) Other calibrated sensitivity test methods approved by the AHJ [*72*:10.4.3.2.4]

13.7.4.7.5 Detectors or smoke alarms found to have a sensitivity outside the listed and marked sensitivity range shall be cleaned and recalibrated or be replaced.

Exception: Devices listed as field adjustable shall be permitted to be either adjusted within the listed and marked sensitivity range and cleaned and recalibrated, or they shall be replaced. [72:10.4.3.2.5]

13.7.4.7.6 The detector or smoke alarm sensitivity shall not be tested or measured using any device that administers an unmeasured concentration of smoke or other aerosol into the detector or smoke alarm. [*72*:10.4.3.2.6]

13.8 Other Fire Protection Systems. Where other fire protection systems are required to be installed by the provisions of this *Code*, or are installed with the approval of the AHJ as an alternative or equivalency, the design and installation of the system shall comply with the appropriate standards listed in Table 13.8. The system shall be tested and maintained in accordance with Section 10.4.

Table 13.8 Other Required Fire Protection Systems

Type of System	NFPA Standard
Low-, medium-, and high-expansion foam systems	NFPA 11, *Standard for Low-, Medium-, and High-Expansion Foam*
Carbon dioxide systems	NFPA 12, *Standard on Carbon Dioxide Extinguishing Systems*
Halon 1301 systems	NFPA 12A, *Standard on Halon 1301 Fire Extinguishing Systems*
Sprinklers in one- and two-family dwellings and manufactured homes	NFPA 13D, *Standard for the Installation of Sprinkler Systems in One- and Two-Family Dwellings and Manufactured Homes*
Sprinklers in residential occupancies up to and including four stories in height	NFPA 13R, *Standard for the Installation of Sprinkler Systems in Residential Occupancies up to and Including Four Stories in Height*
Water spray systems	NFPA 15, *Standard for Water Spray Fixed Systems for Fire Protection*
Deluge foam-water sprinkler, foam-water spray systems, and closed-head foam-water sprinkler systems	NFPA 16, *Standard for the Installation of Foam-Water Sprinkler and Foam-Water Spray Systems*
Dry chemical extinguishing systems	NFPA 17, *Standard for Dry Chemical Extinguishing Systems*
Wet chemical extinguishing systems	NFPA 17A, *Standard for Wet Chemical Extinguishing Systems*
Water mist systems	NFPA 750, *Standard on Water Mist Fire Protection Systems*
Clean agent fire-extinguishing systems	NFPA 2001, *Standard on Clean Agent Fire Extinguishing Systems*

Chapter 14 Means of Egress

14.1 Application. Means of egress in new and existing buildings shall comply with this *Code* and NFPA *101*, *Life Safety Code*.

14.2 Exit Access Corridors. Corridors used as exit access and serving an area having an occupant load exceeding 30 shall be separated from other parts of the building by walls having not less than a 1-hour fire resistance rating in accordance with Section 8.3 of NFPA *101*, unless otherwise permitted by the following:

(1) This requirement shall not apply to existing buildings, provided that the occupancy classification does not change.
(2) This requirement shall not apply where otherwise provided in Chapter 12 through Chapter 42 of NFPA *101*. [*101*:7.1.3.1]

14.3 Exits.

14.3.1 Where this *Code* requires an exit to be separated from other parts of the building, the separating construction shall meet the requirements of Section 8.2 of NFPA *101* and the following:

(1)*The separation shall have not less than a 1-hour fire resistance rating where the exit connects three stories or less.
(2)*The separation shall have not less than a 2-hour fire resistance rating where the exit connects four or more stories, unless one of the following conditions exists:
  (a) In existing non-high-rise buildings, existing exit stair enclosures shall have not less than a 1-hour fire resistance rating.
  (b) In existing buildings protected throughout by an approved, supervised automatic sprinkler system in accordance with Section 13.3, existing exit stair enclosures shall have not less than a 1-hour fire resistance rating.
  (c) One-hour enclosures in accordance with 28.2.2.1.2, 29.2.2.1.2, 30.2.2.1.2, and 31.2.2.1.2 of NFPA *101* shall be permitted as an alternative to the requirement of 14.3.1(2).

(3) The 2-hour fire resistance–rated separation required by 14.3.1(2) shall be constructed of an assembly of noncombustible or limited-combustible materials and shall be supported by construction having not less than a 2-hour fire resistance rating. In Type III, Type IV, and Type V construction, fire-retardant-treated wood enclosed in noncombustible or limited-combustible materials shall be permitted.

(4) Openings in the separation shall be protected by fire door assemblies equipped with door closers complying with 14.5.4.

(5)*Openings in exit enclosures shall be limited to doors from normally occupied spaces and corridors and doors for egress from the enclosure, unless one of the following conditions exists:

(a) Openings in exit passageways in mall buildings as provided in Chapter 36 and Chapter 37 of NFPA *101* shall be permitted.

(b) In buildings of Type I or Type II construction, existing fire protection–rated doors to interstitial spaces shall be permitted, provided that such spaces meet all of the following criteria:

i. The space is used solely for distribution of pipes, ducts, and conduits.

ii. The space contains no storage.

iii. The space is separated from the exit enclosure in accordance with Section 8.3 of NFPA *101*.

(c) Existing openings to mechanical equipment spaces protected by approved existing fire protection–rated doors shall be permitted, provided that the following criteria are met:

i. The space is used solely for non-fuel-fired mechanical equipment.

ii. The space contains no storage of combustible materials.

iii. The building is protected throughout by an approved, supervised automatic sprinkler system in accordance with Section 13.3.

(6) Penetrations into, and openings through, an exit enclosure assembly shall be limited to the following:

(a) Doors permitted by 14.3.1(5)

(b)*Electrical conduit serving the stairway

(c) Required exit doors

(d) Ductwork and equipment necessary for independent stair pressurization

(e) Water or steam piping necessary for the heating or cooling of the exit enclosure

(f) Sprinkler piping

(g) Standpipes

(h) Existing penetrations protected in accordance with 8.3.5 of NFPA *101*

(i) Penetrations for fire alarm circuits, where the circuits are installed in metal conduit and the penetrations are protected in accordance with 8.3.5 of NFPA *101*

(7) Penetrations or communicating openings shall be prohibited between adjacent exit enclosures. [***101***:7.1.3.2.1]

14.3.2 An exit enclosure shall provide a continuous protected path of travel to an exit discharge. [***101***:7.1.3.2.2]

14.3.3* An exit enclosure shall not be used for any purpose that has the potential to interfere with its use as an exit and, if so designated, as an area of refuge. *(See also 14.6.3.)* [***101***:7.1.3.2.3]

14.4 Means of Egress Reliability.

14.4.1* General. Means of egress shall be continuously maintained free of all obstructions or impediments to full instant use in the case of fire or other emergency. [***101***:7.1.10.1]

14.4.2 Furnishings and Decorations in Means of Egress.

14.4.2.1 No furnishings, decorations, or other objects shall obstruct exits, access thereto, egress therefrom, or visibility thereof. [***101***:7.1.10.2.1]

14.4.2.2 No obstruction by railings, barriers, or gates shall divide the means of egress into sections appurtenant to individual rooms, apartments, or other occupied spaces. Where the AHJ finds the required path of travel to be obstructed by furniture or other movable objects, the authority shall be permitted to require that such objects be secured out of the way or shall be permitted to require that railings or other permanent barriers be installed to protect the path of travel against encroachment. [***101***:7.1.10.2.2]

14.4.2.3 Mirrors shall not be placed on exit doors. Mirrors shall not be placed in or adjacent to any exit in such a manner as to confuse the direction of egress. [***101***:7.1.10.2.3]

14.4.2.4 Every door and every principal entrance that is required to serve as an exit shall be designed and constructed so that the path of egress travel is obvious and direct. Windows that, because of their physical configuration or design and the materials used in their construction, have the potential to be mistaken for doors shall be made inaccessible to the occupants by barriers or railings. [***101***:7.2.1.1.2]

14.4.3 Impediments to Egress. Any device or alarm installed to restrict the improper use of a means of egress shall be designed and installed so that it cannot, even in case of failure, impede or prevent emergency use of such means of egress unless otherwise provided in 14.5.3 and Chapters 18, 19, 22, and 23 of NFPA *101*. [***101***:7.1.9]

14.5 Doors.

14.5.1 Swing and Force to Open.

14.5.1.1* Any door in a means of egress shall be of the side-hinged or pivoted-swinging type, and shall be installed to be capable of swinging from any position to the full required width of the opening in which it is installed, unless otherwise specified in 14.5.1.1.1 through 14.5.1.1.9. [***101***:7.2.1.4.1]

14.5.1.1.1 Sliding doors in detention and correctional occupancies, as provided in Chapter 22 and Chapter 23 of NFPA *101*, shall be permitted. [***101***:7.2.1.4.1.1]

14.5.1.1.2 Doors in dwelling units, as provided in Chapter 24 of NFPA *101*, shall be permitted. [***101***:7.2.1.4.1.2]

14.5.1.1.3 Doors in residential board and care occupancies, as provided in Chapter 32 and Chapter 33 of NFPA *101*, shall be permitted. [***101***:7.2.1.4.1.3]

14.5.1.1.4 Where permitted in Chapter 12 through Chapter 42 of NFPA *101*, horizontal-sliding or vertical-rolling security grilles or doors that are part of the required means of egress shall be permitted, provided that they meet the following criteria:

(1) Such grilles or doors shall remain secured in the fully open position during the period of occupancy by the general public.

(2) On or adjacent to the grille or door, there shall be a readily visible, durable sign in letters not less than 1 in. (25 mm) high on a contrasting background that reads as follows:

THIS DOOR TO REMAIN OPEN WHEN
THE BUILDING IS OCCUPIED

(3) Doors or grilles shall not be brought to the closed position when the space is occupied.
(4) Doors or grilles shall be operable from within the space without the use of any special knowledge or effort.
(5) Where two or more means of egress are required, not more than half of the means of egress shall be equipped with horizontal-sliding or vertical-rolling grilles or doors. [*101*:7.2.1.4.1.4]

14.5.1.1.5 Horizontal-sliding doors complying with 7.2.1.14 of NFPA *101* shall be permitted. [*101*:7.2.1.4.1.5]

14.5.1.1.6 Horizontal-sliding doors serving a room or area with an occupant load of fewer than 10 in health care occupancies shall be exempt from the requirements of 14.5.1.1 as provided in Chapter 18 or Chapter 19 of NFPA *101*. [*101*:7.2.1.4.1.6]

14.5.1.1.7 Where private garages, business areas, industrial areas, and storage areas with an occupant load not exceeding 10 contain only low or ordinary hazard contents, doors to such areas shall be exempt from the requirement of 14.5.1.1. [*101*:7.2.1.4.1.7]

14.5.1.1.8 Revolving doors complying with 7.2.1.10 of NFPA *101* shall be permitted. [*101*:7.2.1.4.1.8]

14.5.1.1.9 Existing fusible link–operated horizontal-sliding or vertical-rolling fire doors shall be permitted to be used as provided in Chapter 12 through Chapter 42 of NFPA *101*. [*101*:7.2.1.4.1.9]

14.5.1.2 Doors required to be of the side-hinged or pivoted-swinging type shall swing in the direction of egress travel where serving a room or area with an occupant load of 50 or more, except under the following conditions:

(1) Doors in horizontal exits shall not be required to swing in the direction of egress travel where permitted by 7.2.4.3.7.1 or 7.2.4.3.7.2 of NFPA *101*.
(2) Smoke barrier doors shall not be required to swing in the direction of egress travel in existing health care occupancies as provided in Chapter 19 of NFPA *101*. [*101*:7.2.1.4.2]

14.5.1.3 A door shall swing in the direction of egress travel under either of the following conditions:

(1) Where the door is used in an exit enclosure, unless the door is the door of an individual living unit that opens directly into an exit enclosure
(2) When the door serves a high hazard contents area [*101*:7.2.1.4.3]

14.5.1.4* During its swing, any door in a means of egress shall leave not less than one-half of the required width of an aisle, a corridor, a passageway, or a landing unobstructed and shall project not more than 7 in. (180 mm) into the required width of an aisle, a corridor, a passageway, or a landing, when fully open, unless both of the following conditions are met:

(1) The door provides access to a stair in an existing building.
(2) The door meets the requirement that limits projection to not more than 7 in. (180 mm) into the required width of the stair landing when the door is fully open. [*101*:7.2.1.4.4]

14.5.1.5 The forces required to fully open any door manually in a means of egress shall not exceed 15 lbf (67 N) to release the latch, 30 lbf (133 N) to set the door in motion, and 15 lbf (67 N) to open the door to the minimum required width, unless otherwise specified in 14.5.1.5.2 through 14.5.1.5.5. [*101*:7.2.1.4.5]

14.5.1.5.1 The forces specified in 14.5.1.5 shall be applied to the latch stile. [*101*:7.2.1.4.5.1]

14.5.1.5.2 Opening forces for interior side-hinged or pivoted-swinging doors without closers shall not exceed 5 lbf (22 N). [*101*:7.2.1.4.5.2]

14.5.1.5.3 The opening force for existing doors in existing buildings shall not exceed 50 lbf (222 N) applied to the latch stile. [*101*:7.2.1.4.5.3]

14.5.1.5.4 The opening forces for horizontal-sliding doors in detention and correctional occupancies shall be as provided in Chapter 22 and Chapter 23 of NFPA *101*. [*101*:7.2.1.4.5.4]

14.5.1.5.5 The opening forces for power-operated doors shall be as provided in 7.2.1.9 of NFPA *101*. [*101*:7.2.1.4.5.5]

14.5.1.6 Screen doors and storm doors used in a means of egress shall be subject to the requirements for direction of swing that are applicable to other doors used in a means of egress. [*101*:7.2.1.4.6]

14.5.2 Locks, Latches, and Alarm Devices.

14.5.2.1 Doors shall be arranged to be opened readily from the egress side whenever the building is occupied. [*101*:7.2.1.5.1]

14.5.2.2 Locks, if provided, shall not require the use of a key, a tool, or special knowledge or effort for operation from the egress side. [*101*:7.2.1.5.2]

14.5.2.3 The requirements of 14.5.2.1 and 14.5.2.2 shall not apply where otherwise provided in Chapter 18 through Chapter 23 of NFPA *101*. [*101*:7.2.1.5.3]

14.5.2.4 Exterior doors shall be permitted to have key-operated locks from the egress side, provided that the following criteria are met:

(1) This alternative is permitted in Chapter 12 through Chapter 42 of NFPA *101* for the specific occupancy.
(2) A readily visible, durable sign in letters not less than 1 in. (25 mm) high on a contrasting background that reads as follows is located on or adjacent to the door:

THIS DOOR TO REMAIN UNLOCKED WHEN
THE BUILDING IS OCCUPIED

(3) The locking device is of a type that is readily distinguishable as locked.
(4) A key is immediately available to any occupant inside the building when it is locked. [*101*:7.2.1.5.4]

14.5.2.5 The alternative provisions of 14.5.2.4 shall be permitted to be revoked by the AHJ for cause. [*101*:7.2.1.5.5]

14.5.2.6 Where permitted in Chapter 12 through Chapter 42 of NFPA *101*, key operation shall be permitted, provided that the key cannot be removed when the door is locked from the side from which egress is to be made. [*101*:7.2.1.5.6]

14.5.2.7* Every door in a stair enclosure serving more than four stories, unless permitted by 14.5.2.7.2, shall meet one of the following:

(1) Re-entry from the stair enclosure to the interior of the building shall be provided.

(2) An automatic release that is actuated with the initiation of the building fire alarm system shall be provided to unlock all stair enclosure doors to allow re-entry.
(3) Selected re-entry shall be provided in accordance with 14.5.2.7.1. [*101*:7.2.1.5.7]

14.5.2.7.1 Doors on stair enclosures shall be permitted to be equipped with hardware that prevents re-entry into the interior of the building, provided that the following criteria are met:

(1) There shall be not less than two levels where it is possible to leave the stair enclosure to access another exit.
(2) There shall be not more than four stories intervening between stories where it is possible to leave the stair enclosure to access another exit.
(3) Re-entry shall be possible on the top story or next-to-top story served by the stair enclosure, and such story shall allow access to another exit.
(4) Doors allowing re-entry shall be identified as such on the stair side of the door.
(5) Doors not allowing re-entry shall be provided with a sign on the stair side indicating the location of the nearest door, in each direction of travel, that allows re-entry or exit. [*101*:7.2.1.5.7.1]

14.5.2.7.2 The requirement of 14.5.2.7 shall not apply to the following:

(1) Existing installations as permitted in Chapter 12 through Chapter 42 of NFPA *101*
(2) Stair enclosures serving a building permitted to have a single exit in accordance with Chapter 11 through Chapter 42 of NFPA *101*
(3) Stair enclosures in health care occupancies where otherwise provided in Chapter 18 of NFPA *101*
(4) Stair enclosures in detention and correctional occupancies where otherwise provided in Chapter 22 of NFPA *101* [*101*:7.2.1.5.7.2]

14.5.2.8 If a stair enclosure allows access to the roof of the building, the door to the roof either shall be kept locked or shall allow re-entry from the roof. [*101*:7.2.1.5.8]

14.5.2.9* A latch or other fastening device on a door shall be provided with a releasing device that has an obvious method of operation and that is readily operated under all lighting conditions. [*101*:7.2.1.5.9]

14.5.2.9.1 The releasing mechanism for any latch other than existing installations shall be located not less than 34 in. (865 mm), and not more than 48 in. (1220 mm), above the finished floor. [*101*:7.2.1.5.9.1]

14.5.2.9.2 The releasing mechanism shall open the door with not more than one releasing operation, unless otherwise specified in 14.5.2.9.3 and 14.5.2.9.4. [*101*:7.2.1.5.9.2]

14.5.2.9.3* Egress doors from individual living units and guest rooms of residential occupancies shall be permitted to be provided with devices, including automatic latching devices, that require not more than one additional releasing operation, provided that such device is operable from the inside without the use of a key or tool and is mounted at a height not exceeding 48 in. (1220 mm) above the finished floor. [*101*:7.2.1.5.9.3]

14.5.2.9.4 Existing security devices permitted by 14.5.2.9.3 shall be permitted to have two additional releasing operations. [*101*:7.2.1.5.9.4]

14.5.2.9.5 Existing security devices permitted by 14.5.2.9.3, other than automatic latching devices, shall be located not more than 60 in. (1525 mm) above the finished floor. [*101*:7.2.1.5.9.5]

14.5.2.10 Where pairs of doors are required in a means of egress, one of the following criteria shall be met:

(1) Each leaf of the pair shall be provided with a releasing device that does not depend on the release of one door before the other.
(2) Approved automatic flush bolts shall be used and arranged such that the following criteria are met:
   (a) The door leaf equipped with the automatic flush bolts shall have no doorknob or surface-mounted hardware.
   (b) Unlatching of any leaf shall not require more than one operation. [*101*:7.2.1.5.10]

14.5.2.11* Devices shall not be installed in connection with any door on which panic hardware or fire exit hardware is required where such devices prevent or are intended to prevent the free use of the door for purposes of egress, unless otherwise provided in 14.5.3. [*101*:7.2.1.5.11]

14.5.3 Special Locking Arrangements.

14.5.3.1 Delayed-Egress Locks. Approved, listed, delayed-egress locks shall be permitted to be installed on doors serving low and ordinary hazard contents in buildings protected throughout by an approved, supervised automatic fire detection system in accordance with Section 13.7 or an approved, supervised automatic sprinkler system in accordance with Section 13.3, and where permitted in Chapter 12 through Chapter 42 of NFPA *101*, provided that the following criteria are met:

(1) The provisions of 14.5.3.2 for access-controlled egress doors shall not apply to doors with delayed-egress locks.
(2) The doors shall unlock upon actuation of one of the following:
   (a) Approved, supervised automatic sprinkler system in accordance with Section 13.3
   (b) Not more than one heat detector of an approved, supervised automatic fire detection system in accordance with Section 13.7
   (c) Not more than two smoke detectors of an approved, supervised automatic fire detection system in accordance with Section 13.7
(3) The doors shall unlock upon loss of power controlling the lock or locking mechanism.
(4)*An irreversible process shall release the lock within 15 seconds, or 30 seconds where approved by the AHJ, upon application of a force to the release device required in 14.5.2.9 under the following conditions:
   (a) The force shall not be required to exceed 15 lbf (67 N).
   (b) The force shall not be required to be continuously applied for more than 3 seconds.
   (c) The initiation of the release process shall activate an audible signal in the vicinity of the door.
   (d) Once the door lock has been released by the application of force to the releasing device, relocking shall be by manual means only.

(5)*A readily visible, durable sign in letters not less than 1 in. (25 mm) high and not less than ⅛ in. (3.2 mm) in stroke width on a contrasting background that reads as follows shall be located on the door adjacent to the release device: [*101*:7.2.1.6.1]

PUSH UNTIL ALARM SOUNDS
DOOR CAN BE OPENED IN 15 SECONDS

14.5.3.2* Access-Controlled Egress Doors. Where permitted in Chapter 11 through Chapter 42 of NFPA *101*, doors in the means of egress shall be permitted to be equipped with an approved entrance and egress access control system, provided that the following criteria are met:

(1) A sensor shall be provided on the egress side, arranged to detect an occupant approaching doors that are arranged to unlock in the direction of egress upon detection of an approaching occupant or loss of power to the sensor.
(2) Loss of power to the part of the access control system that locks the doors shall automatically unlock the doors in the direction of egress.
(3) The doors shall be arranged to unlock in the direction of egress from a manual release device located 40 in. to 48 in. (1015 mm to 1220 mm) vertically above the floor and within 60 in. (1525 mm) of the secured doors.
(4) The manual release device specified in 14.5.3.2(3) shall be readily accessible and clearly identified by a sign that reads as follows:

PUSH TO EXIT

(5) When operated, the manual release device shall result in direct interruption of power to the lock — independent of the access control system electronics — and the doors shall remain unlocked for not less than 30 seconds.
(6) Activation of the building fire-protective signaling system, if provided, shall automatically unlock the doors in the direction of egress, and the doors shall remain unlocked until the fire-protective signaling system has been manually reset.
(7) The activation of manual fire alarm boxes that activate the building fire-protective signaling system specified in 14.5.3.2(6) shall not be required to unlock the doors.
(8) Activation of the building automatic sprinkler or fire detection system, if provided, shall automatically unlock the doors in the direction of egress, and the doors shall remain unlocked until the fire-protective signaling system has been manually reset. [*101*:7.2.1.6.2]

14.5.3.3 Panic Hardware and Fire Exit Hardware.

14.5.3.3.1 Where a door is required to be equipped with panic or fire exit hardware, such hardware shall meet the following criteria:

(1) It shall consist of a cross bar or a push pad, the actuating portion of which extends across not less than one-half of the width of the door leaf.
(2) It shall be mounted as follows:
   (a) New installations shall be not less than 34 in. (865 mm), nor more than 48 in. (1220 mm), above the floor.
   (b) Existing installations shall be not less than 30 in. (760 mm), nor more than 48 in. (1220 mm), above the floor.
(3) It shall be constructed so that a horizontal force not to exceed 15 lbf (66 N) actuates the cross bar or push pad and latches. [*101*:7.2.1.7.1]

14.5.3.3.2 Only approved panic hardware shall be used on doors that are not fire doors. Only approved fire exit hardware shall be used on fire doors. [*101*:7.2.1.7.2]

14.5.3.3.3 Required panic hardware and fire exit hardware, in other than detention and correctional occupancies as otherwise provided in Chapter 22 and Chapter 23 of NFPA *101*, shall not be equipped with any locking device, set screw, or other arrangement that prevents the release of the latch when pressure is applied to the releasing device. [*101*:7.2.1.7.3]

14.5.3.3.4 Devices that hold the latch in the retracted position shall be prohibited on fire exit hardware, unless such devices are listed and approved for such a purpose. [*101*:7.2.1.7.4]

14.5.4 Self-Closing Devices.

14.5.4.1* A door normally required to be kept closed shall not be secured in the open position at any time and shall be self-closing or automatic-closing in accordance with 14.5.4.2, unless otherwise permitted by 14.5.4.3. [*101*:7.2.1.8.1]

14.5.4.2 In any building of low or ordinary hazard contents, as defined in 3.3.128.2 and 3.3.128.3, or where approved by the AHJ, doors shall be permitted to be automatic-closing, provided that the following criteria are met:

(1) Upon release of the hold-open mechanism, the door becomes self-closing.
(2) The release device is designed so that the door instantly releases manually and, upon release, becomes self-closing, or the door can be readily closed.
(3) The automatic releasing mechanism or medium is activated by the operation of approved smoke detectors installed in accordance with the requirements for smoke detectors for door release service in *NFPA 72*.
(4) Upon loss of power to the hold-open device, the hold-open mechanism is released and the door becomes self-closing.
(5) The release by means of smoke detection of one door in a stair enclosure results in closing all doors serving that stair. [*101*:7.2.1.8.2]

14.5.4.3 The elevator car doors and the associated hoistway enclosure doors at the floor level designated for recall in accordance with the requirements of 11.3.1 shall be permitted to remain open during Phase I Emergency Recall Operation. [*101*:7.2.1.8.3]

14.6 Enclosure and Protection of Stairs.

14.6.1 Enclosures.

14.6.1.1 All inside stairs serving as an exit or exit component shall be enclosed in accordance with Section 14.3. [*101*:7.2.2.5.1.1]

14.6.1.2 Inside stairs, other than those serving as an exit or exit component, shall be protected in accordance with Section 8.6 of NFPA *101*. [*101*:7.2.2.5.1.2]

14.6.1.3 In existing buildings, where a two-story exit enclosure connects the story of exit discharge with an adjacent story, the exit shall be permitted to be enclosed only on the story of exit discharge, provided that not less than 50 percent of the number and capacity of exits on the story of exit discharge are independent of such enclosures. [*101*:7.2.2.5.1.3]

14.6.2* Exposures.

14.6.2.1 Where nonrated walls or unprotected openings enclose the exterior of a stairway, other than an existing stairway, and the walls or openings are exposed by other parts of the

building at an angle of less than 180 degrees, the building enclosure walls within 10 ft (3050 mm) horizontally of the nonrated wall or unprotected opening shall be constructed as required for stairway enclosures, including opening protectives. [*101*:7.2.2.5.2.1]

14.6.2.2 Construction shall extend vertically from the ground to a point 10 ft (3050 mm) above the topmost landing of the stairs or to the roofline, whichever is lower. [*101*:7.2.2.5.2.2]

14.6.2.3 The fire resistance rating of the separation extending 10 ft (3050 mm) from the stairs shall not be required to exceed 1 hour where openings have not less than a ¾-hour fire protection rating. [*101*:7.2.2.5.2.3]

14.6.3* Usable Space. Enclosed, usable spaces, within exit enclosures shall be prohibited, including under stairs, unless otherwise permitted by 14.6.3.2. [*101*:7.2.2.5.3]

14.6.3.1 Open space within the exit enclosure shall not be used for any purpose that has the potential to interfere with egress. [*101*:7.2.2.5.3.1]

14.6.3.2 Enclosed, usable space shall be permitted under stairs, provided that the following criteria are met:

(1) The space shall be separated from the stair enclosure by the same fire resistance as the exit enclosure.
(2) Entrance to the enclosed, usable space shall not be from within the stair enclosure. *(See also 14.3.3.)* [*101*:7.2.2.5.3.2]

14.6.4* Stairway Marking.

14.6.4.1 Enclosed stairs meeting either of the following two conditions shall comply with 14.6.4.1.1 through 14.6.4.1.8.

(1) The stair is a new enclosed stair serving three or more stories.
(2) The stair is an existing enclosed stair serving five or more stories. [*101*:7.2.2.5.4.1]

14.6.4.1.1 The stairs shall be provided with special signage within the enclosure at each floor landing. [*101*:7.2.2.5.4.1(A)]

14.6.4.1.2 The signage shall indicate the floor level. [*101*:7.2.2.5.4.1(B)]

14.6.4.1.3 The signage shall indicate the terminus of the top and bottom of the stair enclosure. [*101*:7.2.2.5.4.1(C)]

14.6.4.1.4 The signage shall indicate the identification of the stair enclosure. [*101*:7.2.2.5.4.1(D)]

14.6.4.1.5 The signage shall indicate the floor level of, and the direction to, exit discharge. [*101*:7.2.2.5.4.1(E)]

14.6.4.1.6 The signage shall be located inside the enclosure approximately 60 in. (1525 mm) above the floor landing in a position that is visible when the door is in the open or closed position. [*101*:7.2.2.5.4.1(F)]

14.6.4.1.7 The signage shall comply with 14.14.6.5.1 and 14.14.6.5.2. [*101*:7.2.2.5.4.1(G)]

14.6.4.1.8 The floor level designation shall also be tactile in accordance with ICC/ANSI A117.1, *American National Standard for Accessible and Usable Buildings and Facilities.* [*101*:7.2.2.5.4.1(H)]

14.6.4.2 Wherever an enclosed stair requires travel in an upward direction to reach the level of exit discharge, special signs with directional indicators showing the direction to the level of exit discharge shall be provided at each floor level landing from which upward direction of travel is required, unless otherwise provided in 14.6.4.2.1 and 14.6.4.2.2, and the following also shall apply:

(1) Such signage shall comply with 14.14.6.5.1 and 14.14.6.5.2.
(2) Such signage shall be visible when the door is in the open or closed position. [*101*:7.2.2.5.4.2]

14.6.4.2.1 The requirement of 14.6.4.2 shall not apply where signs required by 14.6.4.1 are provided. [*101*:7.2.2.5.4.2(A)]

14.6.4.2.2 The requirement of 14.6.4.2 shall not apply to stairs extending not more than one story below the level of exit discharge where the exit discharge is clearly obvious. [*101*:7.2.2.5.4.2(B)]

14.6.4.3 The sign shall be painted or stenciled on the wall or on a separate sign securely attached to the wall. [*101*:7.2.2.5.4.3]

14.6.4.4 The stairway identification letter shall be located at the top of the sign in minimum 1 in. (25 mm) high lettering and shall be in accordance with 7.10.8.2 of NFPA *101*. [*101*:7.2.2.5.4.4]

14.6.4.5 Roof access or the lack thereof shall be designated by a sign that reads ROOF ACCESS or NO ROOF ACCESS and located under the stairway identification letter. Lettering shall be a minimum of 1 in. (25 mm) high and shall be in accordance with 14.14.6.5.2. [*101*:7.2.2.5.4.5]

14.6.4.6 The floor level number shall be located in the middle of the sign in minimum 5 in. (125 mm) high numbers and shall be in accordance with 14.14.6.5.2. Mezzanine levels shall have the letter "M" or other appropriate identification letter preceding the floor number, while basement levels shall have the letter "B" or other appropriate identification letter preceding the floor level number. [*101*:7.2.2.5.4.6]

14.6.4.7 Identification of the lower and upper terminus of the stairway shall be located at the bottom of the sign in minimum 1 in. (25 mm) high letters or numbers and shall be in accordance with 14.14.6.5.2. [*101*:7.2.2.5.4.7]

14.6.4.8* Where new contrasting marking is applied to stairs, such marking shall comply with the following:

(1) The marking shall include a continuous strip as a coating on, or as a material integral with, the full width of the leading edge of each tread.
(2) The marking shall include a continuous strip as a coating on, or as a material integral with, the full width of the leading edge of each landing nosing.
(3) The marking strip width, measured horizontally from the leading vertical edge of the nosing, shall be consistent at all nosings.
(4) The marking strip width shall be 1 in. to 2 in. (25 mm to 51 mm). [*101*:7.2.2.5.4.8]

14.7* Exit Passageways.

14.7.1* General. Exit passageways used as exit components shall conform to the general requirements of Section 7.1 of NFPA *101* and to the special requirements of Section 14.7. [*101*:7.2.6.1]

14.7.2 Enclosure. An exit passageway shall be separated from other parts of the building as specified in Section 14.3, and the following alternatives shall be permitted:

(1) Fire windows in accordance with 8.3.3 of NFPA *101* shall be permitted to be installed in the separation in a building protected throughout by an approved, supervised automatic sprinkler system in accordance with Section 13.3.
(2) Existing fixed wired glass panels in steel sash shall be permitted to be continued in use in the separation in buildings protected throughout by an approved, supervised automatic sprinkler system in accordance with Section 13.3. [*101*:7.2.6.2]

14.7.3 Stair Discharge. An exit passageway that serves as a discharge from a stair enclosure shall have not less than the same fire resistance rating and opening protective fire protection rating as those required for the stair enclosure. [*101*:7.2.6.3]

14.7.4 Width. The width of an exit passageway shall be adequate to accommodate the aggregate required capacity of all exits that discharge through it, unless one of the following conditions applies:

(1) *Where an exit passageway serves occupants of the level of exit discharge as well as other stories, the capacity shall not be required to be aggregated.
(2) As provided in Chapter 36 and Chapter 37 of NFPA *101*, an exit passageway in a mall building shall be permitted to accommodate occupant loads independently from the mall and the tenant spaces. *(See 36.2.2.7.2 and 37.2.2.7.2 of NFPA 101.)* [*101*:7.2.6.4]

14.8 Capacity of Means of Egress.

14.8.1 Occupant Load.

14.8.1.1 Sufficient Capacity for Occupant Load. The total capacity of the means of egress for any story, balcony, tier, or other occupied space shall be sufficient for the occupant load thereof. [*101*:7.3.1.1]

14.8.1.2* Occupant Load Factor. The occupant load in any building or portion thereof shall be not less than the number of persons determined by dividing the floor area assigned to that use by the occupant load factor for that use as specified in Table 14.8.1.2, Figure 14.8.1.2(a), and Figure 14.8.1.2(b). Where both gross and net area figures are given for the same occupancy, calculations shall be made by applying the gross area figure to the gross area of the portion of the building devoted to the use for which the gross area figure is specified and by applying the net area figure to the net area of the portion of the building devoted to the use for which the net area figure is specified. [*101*:7.3.1.2]

14.8.1.3 Occupant Load Increases.

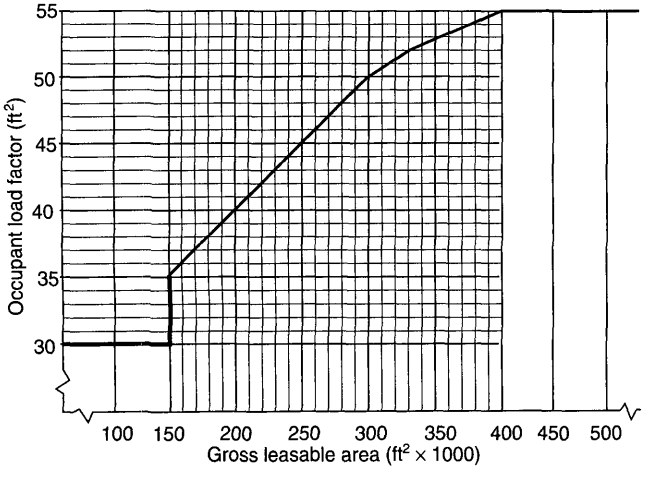

FIGURE 14.8.1.2(a) Mall Building Occupant Load Factors. (U.S. Customary Units) [*101*:Figure 7.3.1.2(a)]

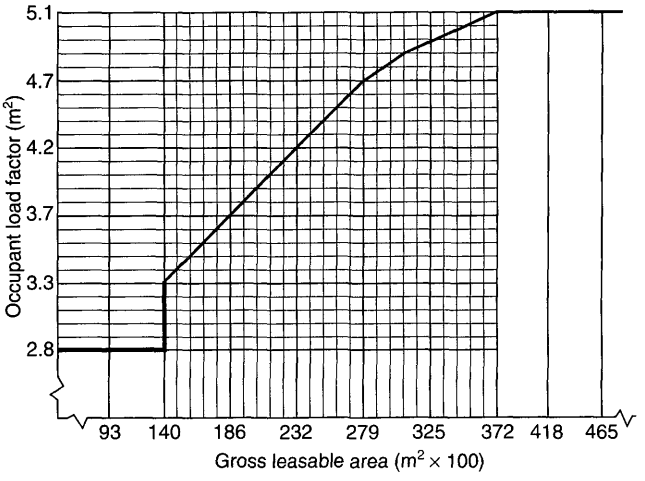

FIGURE 14.8.1.2(b) Mall Building Occupant Load Factors (SI Units). [*101*:Figure 7.3.1.2(b)]

14.8.1.3.1 The occupant load in any building or portion thereof shall be permitted to be increased from the occupant load established for the given use in accordance with 14.8.1.2 where all other requirements of this *Code* are also met, based on such increased occupant load. [*101*:7.3.1.3.1]

14.8.1.3.2 The AHJ shall be permitted to require an approved aisle, seating, or fixed equipment diagram to substantiate any increase in occupant load and shall be permitted to require that such a diagram be posted in an approved location. [*101*:7.3.1.3.2]

14.8.1.4 Exits Serving More than One Story. Where an exit serves more than one story, only the occupant load of each story considered individually shall be used in computing the required capacity of the exit at that story, provided that the required egress capacity of the exit is not decreased in the direction of egress travel. [*101*:7.3.1.4]

14.8.1.5 Capacity from a Point of Convergence. Where means of egress from a story above and a story below converge at an intermediate story, the capacity of the means of egress from the point of convergence shall be not less than the sum of the capacity of the two means of egress. [*101*:7.3.1.5]

14.8.1.6 Egress Capacity from Balconies and Mezzanines. Where any required egress capacity from a balcony or mezzanine passes through the room below, that required capacity shall be added to the required egress capacity of the room below. [*101*:7.3.1.6]

14.8.2 Measurement of Means of Egress.

14.8.2.1 The width of means of egress shall be measured in the clear at the narrowest point of the egress component under consideration, unless otherwise provided in 14.8.2.2 or 14.8.2.3. [*101*:7.3.2.1]

14.8.2.2 Projections within the means of egress of not more than 4½ in. (114 mm) on each side shall be permitted at a height of 38 in. (965 mm) and below. [*101*:7.3.2.2]

14.8.2.3 In health care and ambulatory health care occupancies, projections shall be permitted in corridors in accordance with Chapter 18 through Chapter 21 of NFPA *101*. [*101*:7.3.2.3]

Table 14.8.1.2 Occupant Load Factor

Use	(ft^2 per person)[a]	(m^2 per person)[b]
Assembly Use		
Concentrated use, without fixed seating	7 net	0.65 net
Less concentrated use, without fixed seating	15 net	1.4 net
Bench-type seating	1 person/18 linear in.	1 person/455 linear mm
Fixed seating	Number of fixed seats	Number of fixed seats
Waiting spaces	*See 12.1.7.2 and 13.1.7.2 of NFPA 101*	*See 12.1.7.2 and 13.1.7.2 of NFPA 101*
Kitchens	100	9.3
Library stack areas	100	9.3
Library reading rooms	50 net	4.6 net
Swimming pools	50 (water surface)	4.6 (water surface)
Swimming pool decks	30	2.8
Exercise rooms with equipment	50	4.6
Exercise rooms without equipment	15	1.4
Stages	15 net	1.4 net
Lighting and access catwalks, galleries, gridirons	100 net	9.3 net
Casinos and similar gaming areas	11	1
Skating rinks	50	4.6
Educational Use		
Classrooms	20 net	1.9 net
Shops, laboratories, vocational rooms	50 net	4.6 net
Day-Care Use	35 net	3.3 net
Health Care Use		
Inpatient treatment departments	240	22.3
Sleeping departments	120	11.1
Ambulatory health care	100	9.3
Detention and Correctional Use	120	11.1
Residential Use		
Hotels and dormitories	200	18.6
Apartment buildings	200	18.6
Board and care, large	200	18.6
Industrial Use		
General and high- hazard industrial	100	9.3
Special-purpose industrial	NA	NA
Business Use	100	9.3
Storage Use		
In storage occupancies	NA	NA
In mercantile occupancies	300	27.9
In other than storage and mercantile occupancies	500	46.5

Table 14.8.1.2 ***Continued***

Use	(ft^2 per person)[a]	(m^2 per person)[b]
Mercantile Use		
Sales area on street floor[b,c]	30	2.8
Sales area on two or more street floors [c]	40	3.7
Sales area on floor below street floor[c]	30	2.8
Sales area on floors above street floor[c]	60	5.6
Floors or portions of floors used only for offices	*See business use*	*See business use*
Floors or portions of floors used only for storage, receiving, and shipping, and not open to general public	300	27.9
Mall buildings[d]	Per factors applicable to use of space[e]	Per factors applicable to use of space[e]

NA = Not applicable. The occupant load is the maximum probable number of occupants present at any time.

[a]All factors are expressed in gross area unless marked "net."

[b]For the purpose of determining occupant load in mercantile occupancies where, due to differences in grade of streets on different sides, two or more floors directly accessible from streets (not including alleys or similar back streets) exist, each such floor is permitted to be considered a street floor. The occupant load factor is one person for each 40 ft^2 (3.7 m^2) of gross floor area of sales space.

[c]For the purpose of determining occupant load in mercantile occupancies with no street floor, as defined in 3.3.239 of NFPA *101*, but with access directly from the street by stairs or escalators, the floor at the point of entrance to the mercantile occupancy is considered the street floor.

[d]For any food court or other assembly use areas located in the mall that are not included as a portion of the gross leasable area of the mall building, the occupant load is calculated based on the occupant load factor for that use as specified in Table 14.8.1.2. The remaining mall area is not required to be assigned an occupant load.

[e]The portions of the mall that are considered a pedestrian way and not used as gross leasable area are not required to be assessed an occupant load based on Table 14.8.1.2. However, means of egress from a mall pedestrian way are required to be provided for an occupant load determined by dividing the gross leasable area of the mall building (not including anchor stores) by the appropriate lowest whole number occupant load factor from Figure 14.8.1.2(a) or Figure 14.8.1.2(b).

Each individual tenant space is required to have means of egress to the outside or to the mall based on occupant loads calculated by using the appropriate occupant load factor from Table 14.8.1.2.

Each individual anchor store is required to have means of egress independent of the mall.

[*101*:Table 7.3.1.2].

14.8.3 Egress Capacity.

14.8.3.1 Egress capacity for approved components of means of egress shall be based on the capacity factors shown in Table 14.8.3.1. [*101*:7.3.3.1]

Table 14.8.3.1 Capacity Factors

	Stairways (width per person)		Level Components and Ramps (width per person)	
Area	**in.**	**mm**	**in.**	**mm**
Board and care	0.4	10	0.2	5
Health care, sprinklered	0.3	7.6	0.2	5
Health care, nonsprinklered	0.6	15	0.5	13
High hazard contents	0.7	18	0.4	10
All others	0.3	7.6	0.2	5

[*101*:Table 7.3.3.1]

14.8.3.2 The required capacity of a corridor shall be the occupant load that utilizes the corridor for exit access divided by the required number of exits to which the corridor connects, but the corridor capacity shall be not less than the required capacity of the exit to which the corridor leads. [*101*:7.3.3.2]

14.8.3.3 Minimum Width.

14.8.3.3.1 The width of any means of egress, unless otherwise provided in 14.8.3.3.1.1 through 14.8.3.3.1.3, shall be as follows:

(1) Not less than that required for a given egress component in this chapter or Chapter 7 or Chapter 12 through Chapter 42 of NFPA *101*
(2) Not less than 36 in. (915 mm) [*101*:7.3.4.1]

14.8.3.3.1.1* The width of exit access that is formed by furniture and movable partitions, that serves not more than six people, and that has a length not exceeding 50 ft (15 m) shall meet both of the following criteria:

(1) The width shall be not less than 18 in. (455 mm), at and below a height of 38 in. (965 mm), and not less than 28 in. (710 mm) above a height of 38 in. (965 mm).
(2) A width of not less than 36 in. (915 mm) for new exit access, and not less than 28 in. (710 mm) for existing exit access, shall be capable of being provided without moving permanent walls. [*101*:7.3.4.1.1]

14.8.3.3.1.2 In existing buildings, the width of exit access shall be permitted to be not less than 28 in. (710 mm). [*101*:7.3.4.1.2]

14.8.3.3.1.3 The requirement of 14.8.3.3.1 shall not apply to the following:

(1) Doors as otherwise provided for in 7.2.1.2 of NFPA *101*
(2) Aisles and aisle accessways in assembly occupancies as otherwise provided in Chapter 12 and Chapter 13 of NFPA *101*
(3) Industrial equipment access as otherwise provided in 40.2.5.2 of NFPA *101* [*101*:7.3.4.1.3]

14.8.3.3.2 Where a single exit access leads to an exit, its capacity in terms of width shall be not less than the required capacity of the exit to which it leads. [*101*:7.3.4.2]

14.8.3.3.3 Where more than one exit access leads to an exit, each shall have a width adequate for the number of persons it accommodates. [*101*:7.3.4.3]

14.9 Number of Means of Egress.

14.9.1 General.

14.9.1.1 The number of means of egress from any balcony, mezzanine, story, or portion thereof shall be not less than two, except under one of the following conditions:

(1) Where a single means of egress is permitted in Chapter 11 through Chapter 42 of NFPA *101*
(2) Where a single means of egress is permitted for a mezzanine or balcony and the common path of travel limitations of Chapter 12 through Chapter 42 of NFPA *101* are met [*101*:7.4.1.1]

14.9.1.2 The number of means of egress from any story or portion thereof, other than for existing buildings as permitted in Chapter 12 through Chapter 42 of NFPA *101*, shall be as follows:

(1) Occupant load more than 500 but not more than 1000 — not less than 3
(2) Occupant load more than 1000 — not less than 4 [*101*:7.4.1.2]

14.9.1.3 Accessible means of egress in accordance with 14.10.4 that do not utilize elevators shall be permitted to serve as any or all of the required minimum number of means of egress. [*101*:7.4.1.3]

14.9.1.4 The occupant load of each story considered individually shall be required to be used in computing the number of means of egress at each story, provided that the required number of means of egress is not decreased in the direction of egress travel. [*101*:7.4.1.4]

14.9.1.5 Doors other than the hoistway door; the elevator car door; and doors that are readily openable from the car side without a key, a tool, special knowledge, or special effort, shall be prohibited at the point of access to an elevator car. [*101*:7.4.1.5]

14.9.1.6 Elevator lobbies shall have access to at least one exit. Such exit access shall not require the use of a key, a tool, special knowledge, or special effort. [*101*:7.4.1.6]

14.10 Arrangement of Means of Egress.

14.10.1 General.

14.10.1.1 Exits shall be located and exit access shall be arranged so that exits are readily accessible at all times. [*101*:7.5.1.1]

14.10.1.1.1* Where exits are not immediately accessible from an open floor area, continuous passageways, aisles, or corridors leading directly to every exit shall be maintained and shall be arranged to provide access for each occupant to not less than two exits by separate ways of travel, unless otherwise provided in 14.10.1.1.3 and 14.10.1.1.4. [*101*:7.5.1.1.1]

14.10.1.1.2 Exit access corridors shall provide access to not less than two approved exits, unless otherwise provided in 14.10.1.1.3 and 14.10.1.1.4. [*101*:7.5.1.1.2]

14.10.1.1.3 The requirements of 14.10.1.1.1 and 14.10.1.1.2 shall not apply where a single exit is permitted in Chapter 12 through Chapter 42 of NFPA *101*. [***101***:7.5.1.1.3]

14.10.1.1.4 Where common paths of travel are permitted for an occupancy in Chapter 12 through Chapter 42 of NFPA *101*, such common paths of travel shall be permitted but shall not exceed the limit specified. [***101***:7.5.1.1.4]

14.10.1.2 Corridors shall provide exit access without passing through any intervening rooms other than corridors, lobbies, and other spaces permitted to be open to the corridor, unless otherwise provided in 14.10.1.2.1 and 14.10.1.2.2. [***101***:7.5.1.2]

14.10.1.2.1 Approved existing corridors that require passage through a room to access an exit shall be permitted to continue to be used, provided that the following criteria are met:

(1) The path of travel is marked in accordance with Section 14.14.
(2) Doors to such rooms comply with 7.2.1 of NFPA *101*.
(3) Such arrangement is not prohibited by the applicable occupancy chapter in NFPA *101*. [***101***:7.5.1.2.1]

14.10.1.2.2 Corridors that are not required to be fire resistance rated shall be permitted to discharge into open floor plan areas. [***101***:7.5.1.2.2]

14.10.1.3 Remoteness shall be provided in accordance with 14.10.1.3.1 through 14.10.1.3.7. [***101***:7.5.1.3]

14.10.1.3.1 Where more than one exit is required from a building or portion thereof, such exits shall be remotely located from each other and shall be arranged and constructed to minimize the possibility that more than one has the potential to be blocked by any one fire or other emergency condition. [***101***:7.5.1.3.1]

14.10.1.3.2* Where two exits or exit access doors are required, they shall be located at a distance from one another not less than one-half the length of the maximum overall diagonal dimension of the building or area to be served, measured in a straight line between the nearest edge of the exit doors or exit access doors, unless otherwise provided in 14.10.1.3.3 through 14.10.1.3.5. [***101***:7.5.1.3.2]

14.10.1.3.3 In buildings protected throughout by an approved, supervised automatic sprinkler system in accordance with Section 13.3, the minimum separation distance between two exits or exit access doors measured in accordance with 14.10.1.3.2 shall be not less than one-third the length of the maximum overall diagonal dimension of the building or area to be served. [***101***:7.5.1.3.3]

14.10.1.3.4 Where exit enclosures are provided as the required exits in 14.10.1.3.2 or 14.10.1.3.3 and are interconnected by not less than a 1-hour fire resistance–rated corridor, exit separation shall be permitted to be measured along the line of travel within the corridor. [***101***:7.5.1.3.4]

14.10.1.3.5 In existing buildings, where more than one exit or exit access door is required, such exits or exit access doors shall be permitted to be remotely located in accordance with 14.10.1.3.1. [***101***:7.5.1.3.5]

14.10.1.3.6 Where more than two exits or exit access doors are required, at least two of the required exits or exit access doors shall be arranged to comply with the minimum separation distance requirement. [***101***:7.5.1.3.6]

14.10.1.3.7 The balance of the exits or exit access doors specified in 14.10.1.3.6 shall be located so that, if one becomes blocked, the others shall be available. [***101***:7.5.1.3.7]

14.10.1.4 Interlocking or scissor stairs shall comply with 14.10.1.4.1 and 14.10.1.4.2. [***101***:7.5.1.4]

14.10.1.4.1 New interlocking or scissor stairs shall be permitted to be considered only as a single exit. [***101***:7.5.1.4.1]

14.10.1.4.2* Existing interlocking or scissor stairs shall be permitted to be considered separate exits, provided that they meet the following criteria:

(1) They are enclosed in accordance with 14.3.
(2) They are separated from each other by 2-hour fire resistance–rated noncombustible construction.
(3) No protected or unprotected penetrations or communicating openings exist between the stair enclosures. [***101***:7.5.1.4.2]

14.10.1.5* Exit access shall be arranged so that there are no dead ends in corridors, unless permitted by, and limited to the length specified in, Chapter 12 through Chapter 42 of NFPA *101*. [***101***:7.5.1.5]

14.10.1.6 Exit access from rooms or spaces shall be permitted to be through adjoining or intervening rooms or areas, provided that such rooms or areas are accessory to the area served. Foyers, lobbies, and reception rooms constructed as required for corridors shall not be construed as intervening rooms. Exit access shall be arranged so that it is not necessary to pass through any area identified under Protection from Hazards in Chapter 11 through Chapter 42 of NFPA *101*. [***101***:7.5.1.6]

14.10.2 Impediments to Egress. See also 7.1.9, 14.5.2, and 7.2.1.5 of NFPA *101*. [***101***:7.5.2]

14.10.2.1* Access to an exit shall not be through kitchens, storerooms other than as provided in Chapter 36 and Chapter 37 of NFPA *101*, restrooms, workrooms, closets, bedrooms or similar spaces, or other rooms or spaces subject to locking, unless passage through such rooms or spaces is permitted for the occupancy by Chapter 18, Chapter 19, Chapter 22, and Chapter 23 of NFPA *101*. [***101***:7.5.2.1]

14.10.2.2* Exit access and exit doors shall be designed and arranged to be clearly recognizable. [***101***:7.5.2.2]

14.10.2.2.1 Hangings or draperies shall not be placed over exit doors or located so that they conceal or obscure any exit, unless otherwise provided in 14.10.2.2.2. [***101***:7.5.2.2.1]

14.10.2.2.2 Curtains shall be permitted across means of egress openings in tent walls, provided that the following criteria are met:

(1) They are distinctly marked in contrast to the tent wall so as to be recognizable as means of egress.
(2) They are installed across an opening that is at least 6 ft (1830 mm) in width.
(3) They are hung from slide rings or equivalent hardware so as to be readily moved to the side to create an unobstructed opening in the tent wall that is of the minimum width required for door openings. [***101***:7.5.2.2.2]

14.10.3 Exterior Ways of Exit Access.

14.10.3.1 Exit access shall be permitted to be by means of any exterior balcony, porch, gallery, or roof that conforms to the requirements of Chapter 14 and Chapter 7 of NFPA *101*. [***101***:7.5.3.1]

14.10.3.2 The long side of the balcony, porch, gallery, or similar space shall be at least 50 percent open and shall be arranged to restrict the accumulation of smoke. [***101***:7.5.3.2]

14.10.3.3 Exterior exit access balconies shall be separated from the interior of the building by walls and opening protectives as required for corridors, unless the exterior exit access balcony is served by at least two remote stairs that can be accessed without any occupant traveling past an unprotected opening to reach one of the stairs, or unless dead ends on the exterior exit access do not exceed 20 ft (6100 mm). [***101***:7.5.3.3]

14.10.3.4 Exterior exit access shall be arranged so that there are no dead ends in excess of those permitted for dead-end corridors in Chapter 11 through Chapter 42 of NFPA *101*. [***101***:7.5.3.4]

14.10.4 Accessible Means of Egress.

14.10.4.1* Areas accessible to people with severe mobility impairment, other than in existing buildings, shall have not less than two accessible means of egress, unless otherwise provided in 14.10.4.1.2 through 14.10.4.1.4. [***101***:7.5.4.1]

14.10.4.1.1 Access within the allowable travel distance shall be provided to not less than one accessible area of refuge or one accessible exit providing an accessible route to an exit discharge. [***101***:7.5.4.1.1]

14.10.4.1.2 A single accessible means of egress shall be permitted from buildings or areas of buildings permitted to have a single exit. [***101***:7.5.4.1.2]

14.10.4.1.3 Accessible means of egress shall not be required in health care occupancies protected throughout by an approved, supervised automatic sprinkler system in accordance with Section 13.3. [***101***:7.5.4.1.3]

14.10.4.1.4 Exit access travel along the accessible means of egress shall be permitted to be common for the distances permitted as common paths of travel. [***101***:7.5.4.1.4]

14.10.4.2 Where two accessible means of egress are required, the exits serving such means of egress shall be located at a distance from one another not less than one-half the length of the maximum overall diagonal dimension of the building or area to be served. The distance shall be measured in a straight line between the nearest edge of the exit doors or exit access doors, unless otherwise provided in 14.10.4.2.1 through 14.10.4.2.3. [***101***:7.5.4.2]

14.10.4.2.1 Where exit enclosures are provided as the required exits specified in 14.10.4.2 and are interconnected by not less than a 1-hour fire resistance–rated corridor, exit separation shall be permitted to be measured along the line of travel within the corridor. [***101***:7.5.4.2.1]

14.10.4.2.2 The requirement of 14.10.4.2 shall not apply to buildings protected throughout by an approved, supervised automatic sprinkler system in accordance with Section 13.3. [***101***:7.5.4.2.2]

14.10.4.2.3 The requirement of 14.10.4.2 shall not apply where the physical arrangement of means of egress prevents the possibility that access to both accessible means of egress will be blocked by any one fire or other emergency condition as approved by the AHJ. [***101***:7.5.4.2.3]

14.10.4.3 Each required accessible means of egress shall be continuous from each accessible occupied area to a public way or area of refuge in accordance with 7.2.12.2.2 of NFPA *101*. [***101***:7.5.4.3]

14.10.4.4 Where an exit stair is used in an accessible means of egress, it shall comply with 7.2.12.2.3 of NFPA *101* and either shall incorporate an area of refuge within an enlarged story-level landing or shall be accessed from an area of refuge. [***101***:7.5.4.4]

14.10.4.5 To be considered part of an accessible means of egress, an elevator shall be in accordance with 7.2.12.2.4 of NFPA *101*. [***101***:7.5.4.5]

14.10.4.6 To be considered part of an accessible means of egress, a smoke barrier in accordance with Section 8.5 of NFPA *101* with not less than a 1-hour fire resistance rating, or a horizontal exit in accordance with 7.2.4 of NFPA *101*, shall discharge to an area of refuge in accordance with 7.2.12 of NFPA *101*. [***101***:7.5.4.6]

14.10.4.7 Accessible stories that are four or more stories above or below a story of exit discharge shall have not less than one elevator complying with 14.10.4.5, except as modified in 14.10.4.8. [***101***:7.5.4.7]

14.10.4.8 Where elevators are required by 14.10.4.7, the smokeproof enclosure required by 7.2.12.2.4 of NFPA *101*, shall not be required in buildings protected throughout by an approved, supervised automatic sprinkler system in accordance with NFPA 13. [***101***:7.5.4.8]

14.10.4.9 An area of refuge used as part of a required accessible means of egress shall be in accordance with 7.2.12 of NFPA *101*. [***101***:7.5.4.9]

14.11 Discharge from Exits.

14.11.1* Exit Termination. Exits shall terminate directly, at a public way or at an exterior exit discharge, unless otherwise provided in 14.11.1.2 through 14.11.1.4. [***101***:7.7.1]

14.11.1.1 Yards, courts, open spaces, or other portions of the exit discharge shall be of required width and size to provide all occupants with a safe access to a public way. [***101***:7.7.1.1]

14.11.1.2 The requirement of 14.11.1 shall not apply to interior exit discharge as otherwise provided in 14.11.2. [***101***:7.7.1.2]

14.11.1.3 The requirement of 14.11.1 shall not apply to rooftop exit discharge as otherwise provided in 14.11.6. [***101***:7.7.1.3]

14.11.1.4 Means of egress shall be permitted to terminate in an exterior area of refuge for detention and correctional occupancies as otherwise provided in Chapter 22 and Chapter 23 of NFPA *101*. [***101***:7.7.1.4]

14.11.2 Discharge through Areas on Level of Exit Discharge. Not more than 50 percent of the required number of exits, and not more than 50 percent of the required egress capacity, shall discharge through areas on the level of exit discharge, unless otherwise permitted in 14.11.2.1 and 14.11.2.2, and provided that the criteria of 14.11.2.3 through 14.11.2.7 also are met. [***101***:7.7.2]

14.11.2.1 One hundred percent of the exits shall be permitted to discharge through areas on the level of exit discharge in detention and correctional occupancies as otherwise provided in Chapter 22 and Chapter 23 of NFPA *101*. [***101***:7.7.2.1]

14.11.2.2 In existing buildings, the 50 percent limit on egress capacity shall not apply if the 50 percent limit on the required number of exits is met. [***101***:7.7.2.2]

14.11.2.3 The discharge specified in 14.11.2 shall lead to a free and unobstructed way to the exterior of the building, and such way shall be readily visible and identifiable from the point of discharge from the exit. [***101***:7.7.2.3]

14.11.2.4 The level of discharge shall be protected throughout by an approved, automatic sprinkler system in accordance with Section 13.3, or the portion of the level of discharge used for discharge shall be protected by an approved, automatic sprinkler system in accordance with Section 13.3 and shall be separated from the nonsprinklered portion of the floor by a fire resistance rating meeting the requirements for the enclosure of exits. *(See 14.3.1.)* [***101***:7.7.2.4]

14.11.2.5 The requirement of 14.11.2.4 shall not apply where the discharge area is a vestibule or foyer that meets all of the following criteria:

(1) The depth from the exterior of the building shall be not more than 10 ft (3050 mm), and the length shall be not more than 30 ft (9140 mm).
(2) The foyer shall be separated from the remainder of the level of discharge by construction providing protection not less than the equivalent of wired glass in steel frames.
(3) The foyer shall serve only as means of egress and shall include an exit directly to the outside. [***101***:7.7.2.5]

14.11.2.6 The entire area on the level of discharge shall be separated from areas below by construction having a fire resistance rating not less than that required for the exit enclosure, unless otherwise provided in 14.11.2.7. [***101***:7.7.2.6]

14.11.2.7 Levels below the level of discharge in an atrium shall be permitted to be open to the level of discharge where such level of discharge is protected in accordance with 8.6.7 of NFPA *101*. [***101***:7.7.2.7]

14.11.3 Arrangement and Marking of Exit Discharge. The exit discharge shall be arranged and marked to make clear the direction of egress to a public way. Stairs shall be arranged so as to make clear the direction of egress to a public way. Stairs that continue more than one-half story beyond the level of exit discharge shall be interrupted at the level of exit discharge by partitions, doors, or other effective means. [***101***:7.7.3]

14.11.4 Components of Exit Discharge. Doors, stairs, ramps, corridors, exit passageways, bridges, balconies, escalators, moving walks, and other components of an exit discharge shall comply with the detailed requirements of this chapter for such components. [***101***:7.7.4]

14.11.5 Signs. See 14.6.4. [***101***:7.7.5]

14.11.6 Discharge to Roof. Where approved by the AHJ, exits shall be permitted to discharge to roofs or other sections of the building or an adjoining building where the following criteria are met:

(1) The roof/ceiling assembly construction has a fire resistance rating not less than that required for the exit enclosure.
(2) A continuous and safe means of egress from the roof is available. [***101***:7.7.6]

14.12 Illumination of Means of Egress.

14.12.1 General.

14.12.1.1* Illumination of means of egress shall be provided in accordance with Section 14.12 for every building and structure where required in Chapter 11 through Chapter 42 of NFPA *101*. For the purposes of this requirement, exit access shall include only designated stairs, aisles, corridors, ramps, escalators, and passageways leading to an exit. For the purposes of this requirement, exit discharge shall include only designated stairs, aisles, corridors, ramps, escalators, walkways, and exit passageways leading to a public way. [***101***:7.8.1.1]

14.12.1.2 Illumination of means of egress shall be continuous during the time that the conditions of occupancy require that the means of egress be available for use, unless otherwise provided in 14.12.1.2.2. [***101***:7.8.1.2]

14.12.1.2.1 Artificial lighting shall be employed at such locations and for such periods of time as are necessary to maintain the illumination to the minimum criteria values herein specified. [***101***:7.8.1.2.1]

14.12.1.2.2 Automatic, motion sensor–type lighting switches shall be permitted within the means of egress, provided that the switch controllers are equipped for fail-safe operation, the illumination timers are set for a minimum 15-minute duration, and the motion sensor is activated by any occupant movement in the area served by the lighting units. [***101***:7.8.1.2.2]

14.12.1.3* The floors and other walking surfaces within an exit and within the portions of the exit access and exit discharge designated in 14.12.1.1 shall be illuminated as follows:

(1) During conditions of stair use, the minimum illumination for new stairs shall be at least 10 ft-candle (108 lux), measured at the walking surfaces.
(2) The minimum illumination for floors and walking surfaces, other than new stairs during conditions of stair use, shall be to values of at least 1 ft-candle (10.8 lux), measured at the floor.
(3) In assembly occupancies, the illumination of the floors of exit access shall be at least 0.2 ft-candle (2.2 lux) during periods of performances or projections involving directed light.
(4)*The minimum illumination requirements shall not apply where operations or processes require low lighting levels. [***101***:7.8.1.3]

14.12.1.4* Required illumination shall be arranged so that the failure of any single lighting unit does not result in an illumination level of less than 0.2 ft-candle (2.2 lux) in any designated area. [***101***:7.8.1.4]

14.12.1.5 The equipment or units installed to meet the requirements of Section 14.14 also shall be permitted to serve the function of illumination of means of egress, provided that all requirements of Section 14.12 for such illumination are met. [***101***:7.8.1.5]

14.12.2 Sources of Illumination.

14.12.2.1* Illumination of means of egress shall be from a source considered reliable by the AHJ. [***101***:7.8.2.1]

14.12.2.2 Battery-operated electric lights and other types of portable lamps or lanterns shall not be used for primary illumination of means of egress. Battery-operated electric lights shall be permitted to be used as an emergency source to the extent permitted under Section 14.13. [***101***:7.8.2.2]

14.13 Emergency Lighting.

14.13.1 General.

14.13.1.1* Emergency lighting facilities for means of egress shall be provided in accordance with Section 14.13 for the following:

(1) Buildings or structures where required in Chapter 11 through Chapter 42 of NFPA *101*
(2) Underground and limited access structures as addressed in Section 11.7 of NFPA *101*
(3) High-rise buildings as required by NFPA *101*
(4) Doors equipped with delayed-egress locks
(5) Stair shaft and vestibule of smokeproof enclosures, for which the following also apply:
   (a) The stair shaft and vestibule shall be permitted to include a standby generator that is installed for the smokeproof enclosure mechanical ventilation equipment.
   (b) The standby generator shall be permitted to be used for the stair shaft and vestibule emergency lighting power supply.
(6) New access-controlled egress doors in accordance with 14.5.3.2 [***101***:7.9.1.1]

14.13.1.2 For the purposes of 14.13.1.1, exit access shall include only designated stairs, aisles, corridors, ramps, escalators, and passageways leading to an exit. For the purposes of 14.13.1.1, exit discharge shall include only designated stairs, ramps, aisles, walkways, and escalators leading to a public way. [***101***:7.9.1.2]

14.13.1.3 Where maintenance of illumination depends on changing from one energy source to another, a delay of not more than 10 seconds shall be permitted. [***101***:7.9.1.3]

14.13.2 Periodic Testing of Emergency Lighting Equipment.

14.13.2.1 Required emergency lighting systems shall be tested in accordance with one of the three options offered by 14.13.2.1.1, 14.13.2.1.2, or 14.13.2.1.3. [***101***:7.9.3.1]

14.13.2.1.1 Testing of required emergency lighting systems shall be permitted to be conducted as follows:

(1) Functional testing shall be conducted at 30-day intervals for not less than 30 seconds.
(2) Functional testing shall be conducted annually for not less than 1½ hours if the emergency lighting system is battery powered.
(3) The emergency lighting equipment shall be fully operational for the duration of the tests required by 14.13.2.1.1(1) and 14.13.2.1.1(2).
(4) Written records of visual inspections and tests shall be kept by the owner for inspection by the AHJ. [***101***:7.9.3.1.1]

14.13.2.1.2 Testing of required emergency lighting systems shall be permitted to be conducted as follows:

(1) Self-testing/self-diagnostic battery-operated emergency lighting equipment shall be provided.
(2) Self-testing/self-diagnostic battery-operated emergency lighting equipment shall automatically perform not less than once every 30 days a test for not less than 30 seconds and a diagnostic routine.
(3) Self-testing/self-diagnostic battery-operated emergency lighting equipment shall indicate failures by a status indicator.
(4) A visual inspection shall be performed at intervals not exceeding 30 days.
(5) Functional testing shall be conducted annually for not less than 1½ hours.
(6) Self-testing/self-diagnostic battery-operated emergency lighting equipment shall be fully operational for the duration of the 1½ hour test.
(7) Written records of visual inspections and tests shall be kept by the owner for inspection by the AHJ. [***101***:7.9.3.1.2]

14.13.2.1.3 Testing of required emergency lighting systems shall be permitted to be conducted as follows:

(1) Computer-based, self-testing/self-diagnostic battery-operated emergency lighting equipment shall be provided.
(2) The emergency lighting equipment shall automatically perform not less than once every 30 days a test for not less than 30 seconds and a diagnostic routine.
(3) The emergency lighting equipment shall automatically perform annually a test for not less than 1½ hours.
(4) The emergency lighting equipment shall be fully operational for the duration of the tests required by 14.13.2.1.3(2) and 14.13.2.1.3(3).
(5) The computer-based system shall be capable of providing a report of the history of tests and failures at all times. [***101***:7.9.3.1.3]

14.14 Marking of Means of Egress.

14.14.1 General.

14.14.1.1 Where Required. Means of egress shall be marked in accordance with Section 14.14 where required in Chapter 11 through Chapter 42 of NFPA *101*. [***101***:7.10.1.1]

14.14.1.2* Exits. Exits, other than main exterior exit doors that obviously and clearly are identifiable as exits, shall be marked by an approved sign that is readily visible from any direction of exit access. [***101***:7.10.1.2]

14.14.1.3 Exit Stair Door Tactile Signage. Tactile signage shall be provided to meet the following criteria, unless otherwise provided in 14.14.1.4:

(1) Tactile signage shall be located at each exit door requiring an exit sign.
(2) Tactile signage shall read as follows:

EXIT

(3) Tactile signage shall comply with ICC/ANSI A117.1, *American National Standard for Accessible and Usable Buildings and Facilities*. [***101***:7.10.1.3]

14.14.1.4 Existing Exemption. The requirements of 14.14.1.3 shall not apply to existing buildings, provided that the occupancy classification does not change. [***101***:7.10.1.4]

14.14.1.5 Exit Access.

14.14.1.5.1 Access to exits shall be marked by approved, readily visible signs in all cases where the exit or way to reach the exit is not readily apparent to the occupants. [***101***:7.10.1.5.1]

14.14.1.5.2* New sign placement shall be such that no point in an exit access corridor is in excess of the rated viewing distance or 100 ft (30 m), whichever is less, from the nearest sign. [***101***:7.10.1.5.2]

14.14.1.6* Floor Proximity Exit Signs. Where floor proximity exit signs are required in Chapter 11 through Chapter 42 of NFPA *101*, such signs shall be located near the floor level in addition to those signs required for doors or corridors. The signs shall be illuminated in accordance with 14.14.5. Externally illuminated signs shall be sized in accordance with 14.14.6. The bottom of the sign shall be not less than 6 in. (150 mm), but not more than 18 in. (455 mm), above the floor. For exit doors, the sign shall be mounted on the door or adjacent to the door, with the nearest edge of the sign within 4 in. (100 mm) of the door frame. [***101***:7.10.1.6]

14.14.1.7* Floor Proximity Egress Path Marking. Where floor proximity egress path marking is required in Chapter 11 through Chapter 42 of NFPA *101*, a listed and approved floor proximity egress path marking system that is internally illuminated shall be installed within 18 in. (455 mm) of the floor. The system shall provide a visible delineation of the path of travel along the designated exit access and shall be essentially continuous, except as interrupted by doorways, hallways, corridors, or other such architectural features. The system shall operate continuously or at any time the building fire alarm system is activated. The activation, duration, and continuity of operation of the system shall be accordance with 7.9.2 of NFPA *101*. The system shall be maintained in accordance with the product manufacturing listing. [***101***:7.10.1.7]

14.14.1.8* Visibility. Every sign required in Section 14.14 shall be located and of such size, distinctive color, and design that it is readily visible and shall provide contrast with decorations, interior finish, or other signs. No decorations, furnishings, or equipment that impairs visibility of a sign shall be permitted. No brightly illuminated sign (for other than exit purposes), display, or object in or near the line of vision of the required exit sign that could detract attention from the exit sign shall be permitted. [***101***:7.10.1.8]

14.14.1.9 Mounting Location. The bottom of new egress markings shall be located at a vertical distance of not more than 6 ft 8 in. (2030 mm) above the top edge of the egress opening intended for designation by that marking. Egress markings shall be located at a horizontal distance of not more than the required width of the egress opening, as measured from the edge of the egress opening intended for designation by that marking to the nearest edge of the marking. [***101***:7.10.1.9]

14.14.2* Directional Signs. A sign complying with 14.14.3 with a directional indicator showing the direction of travel shall be placed in every location where the direction of travel to reach the nearest exit is not apparent. [***101***:7.10.2]

14.14.3* Sign Legend.

14.14.3.1 Signs required by 14.14.1 and 14.14.2 shall read as follows in plainly legible letters, or other appropriate wording shall be used: [***101***:7.10.3.1]

EXIT

14.14.3.2* Where approved by the AHJ, pictograms shall be permitted. [***101***:7.10.3.2]

14.14.4* Power Source. Where emergency lighting facilities are required by the applicable provisions of Chapter 11 through Chapter 42 of NFPA *101* for individual occupancies, the signs, other than approved self-luminous signs and listed photoluminescent signs in accordance with 14.14.6.4.2, shall be illuminated by the emergency lighting facilities. The level of illumination of the signs shall be in accordance with 14.14.6.3 for the required emergency lighting duration as specified in 14.14.6.4. However, the level of illumination shall be permitted to decline to 60 percent at the end of the emergency lighting duration. [***101***:7.10.4]

14.14.5 Illumination of Signs.

14.14.5.1* General. Every sign required by 14.14.1.2, 14.14.1.5, or 14.14.6.5.1, other than where operations or processes require low lighting levels, shall be suitably illuminated by a reliable light source. Externally and internally illuminated signs shall be legible in both the normal and emergency lighting mode. [***101***:7.10.5.1]

14.14.5.2* Continuous Illumination.

14.14.5.2.1 Every sign required to be illuminated by 14.14.6.3, 14.14.6.4, and 14.14.6.5.1 shall be continuously illuminated as required under the provisions of Section 14.12, unless otherwise provided in 14.14.5.2.2. [***101***:7.10.5.2.1]

14.14.5.2.2* Illumination for signs shall be permitted to flash on and off upon activation of the fire alarm system. [***101***:7.10.5.2.2]

14.14.6 Externally Illuminated Signs.

14.14.6.1* Size of Signs.

14.14.6.1.1 Externally illuminated signs required by 14.14.1 and 14.14.2, other than approved existing signs, unless otherwise provided in 14.14.6.1.2, shall read EXIT or shall use other appropriate wording in plainly legible letters sized as follows:

(1) For new signs, the letters shall be not less than 6 in. (150 mm) high, with the principal strokes of letters not less than ¾ in. (19 mm) wide.
(2) For existing signs, the required wording shall be permitted to be in plainly legible letters not less than 4 in. (100 mm) high.
(3) The word EXIT shall be in letters of a width not less than 2 in. (51 mm), except the letter I, and the minimum spacing between letters shall be not less than ⅜ in. (9.5 mm).
(4) Sign legend elements larger than the minimum established in 14.14.6.1.1(1) through 14.14.6.1.1(3) shall use letter widths, strokes, and spacing in proportion to their height. [***101***:7.10.6.1.1]

14.14.6.1.2 The requirements of 14.14.6.1.1 shall not apply to marking required by 14.14.1.3 and 14.14.1.6. [***101***:7.10.6.1.2]

14.14.6.2* Size and Location of Directional Indicator.

14.14.6.2.1 Directional indicators, unless otherwise provided in 14.14.6.2.2, shall comply with the following:

(1) The directional indicator shall be located outside of the EXIT legend, not less than ⅜ in. (9.5 mm) from any letter.
(2) The directional indicator shall be of a chevron type, as shown in Figure 14.14.6.2.1.
(3) The directional indicator shall be identifiable as a directional indicator at a distance of 40 ft (12 m).
(4) A directional indicator larger than the minimum established for compliance with 14.14.6.2.1(3) shall be proportionately increased in height, width, and stroke.
(5) The directional indicator shall be located at the end of the sign for the direction indicated. [***101***:7.10.6.2.1]

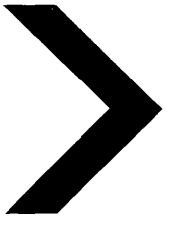

FIGURE 14.14.6.2.1 Chevron-Type Indicator. [*101*:Figure 7.10.6.2.1]

14.14.6.2.2 The requirements of 14.14.6.2.1 shall not apply to approved existing signs. [*101*:7.10.6.2.2]

14.14.6.3* Level of Illumination. Externally illuminated signs shall be illuminated by not less than 5 ft-candles (54 lux) at the illuminated surface and shall have a contrast ratio of not less than 0.5. [*101*:7.10.6.3]

14.14.6.4 Internally Illuminated Signs.

14.14.6.4.1 Listing. Internally illuminated signs shall be listed in accordance with UL 924, *Standard for Emergency Lighting and Power Equipment*, unless they meet one of the following criteria:

(1) They are approved existing signs.
(2) They are existing signs having the required wording in legible letters not less than 4 in. (100 mm) high.
(3) They are signs that are in accordance with 14.14.1.3 and 14.14.1.6. [*101*:7.10.7.1]

14.14.6.4.2* Photoluminescent Signs. The face of a photoluminescent sign shall be continually illuminated while the building is occupied. The illumination levels on the face of the photoluminescent sign shall be in accordance with its listing. The charging illumination shall be a reliable light source as determined by the AHJ. The charging light source shall be of a type specified in the product markings. [*101*:7.10.7.2]

14.14.6.5 Special Signs.

14.14.6.5.1 Sign Illumination.

14.14.6.5.1.1 Where required by other provisions of this *Code*, special signs shall be illuminated in accordance with 14.14.5, 14.14.6.3, and 14.14.6.4. [*101*:7.10.8.1.1]

14.14.6.5.1.2 Where emergency lighting facilities are required by the applicable provisions of Chapter 12 through Chapter 42 of NFPA *101*, the required illumination of special signs shall additionally be provided under emergency lighting conditions. [*101*:7.10.8.1.2]

14.14.6.5.2 Characters. Special signs, where required by other provisions of this *Code*, shall comply with the visual character requirements of ICC/ANSI A117.1, *American National Standard for Accessible and Usable Buildings and Facilities*. [*101*:7.10.8.2]

14.14.6.5.3* No Exit.

14.14.6.5.3.1 Any door, passage, or stairway that is neither an exit nor a way of exit access and that is located or arranged so that it is likely to be mistaken for an exit shall be identified by a sign that reads as follows: [*101*:7.10.8.3.1]

NO
EXIT

14.14.6.5.3.2 The NO EXIT sign shall have the word NO in letters 2 in. (51 mm) high, with a stroke width of ⅜ in. (9.5 mm), and the word EXIT in letters 1 in. (25 mm) high, with the word EXIT below the word NO, unless such sign is an approved existing sign. [*101*:7.10.8.3.2]

14.15 Secondary Means of Escape.

14.15.1 Secondary means of escape shall comply with NFPA *101*.

14.15.2 Where approved on secondary means of egress, security bars, grates, grilles, or similar devices shall be equipped with approved release mechanisms that are releasable from the inside without the use of a tool, a key, special knowledge, or force greater than that which it takes for normal operation of the door or window.

Chapter 15 Planned Building Groups

15.1 Applicability.

15.1.1 Where required by the AHJ, Chapter 15 shall apply to planned building groups in suburban and rural areas that the AHJ determines would be impacted by one or more of the following during a fire:

(1) Limited water supply
(2) Limited fire department resources
(3) Extended fire department response time
(4) Delayed alarms
(5) Limited access
(6) Hazardous vegetation
(7) Unusual terrain
(8) Other unusual characteristics

15.1.2 This chapter does not apply to farms or to mobile homes or recreational vehicle parks. *(See Chapter 27.)*

15.2 Compliance. Planned building groups shall comply with NFPA 1141, *Standard for Fire Protection in Planned Building Groups*.

15.3 Plans. Plans for the planned building group shall be submitted to the AHJ for review and approval.

Chapter 16 Safeguards During Building Construction, Alteration, and Demolition Operations

16.1 General Requirements.

16.1.1 Structures undergoing construction, alteration, or demolition operations, including those in underground locations, shall comply with NFPA 241, *Standard for Safeguarding Construction, Alteration, and Demolition Operations*, and this chapter.

16.1.2 A fire protection plan shall be established where required by the AHJ.

16.1.3* In buildings under construction, adequate escape facilities shall be maintained at all times for the use of construction workers. Escape facilities shall consist of doors, walkways, stairs, ramps, fire escapes, ladders, or other approved means or devices arranged in accordance with the general principles of NFPA *101*, insofar as they can reasonably be applied to buildings under construction. [*101*:4.6.101.2]

16.1.4 Fire department access roads provided in accordance with 18.2.3 shall be provided at the start of a project and shall be maintained throughout construction.

16.1.5 Permanent fire department access road markings shall not be required until the building is complete or occupied for use.

16.2 Processes and Hazards.

16.2.1 Temporary Heating Equipment.

16.2.1.1 Temporary heating equipment shall be listed and shall be installed, used, and maintained in accordance with the manufacturer's instructions. [**241**:5.2.1]

16.2.1.2 Chimney or vent connectors, where required from direct-fired heaters, shall be maintained at least 18 in. (460 mm) from combustibles and shall be installed in accordance with NFPA 211, *Standard for Chimneys, Fireplaces, Vents, and Solid Fuel-Burning Appliances*. [**241**:5.2.2]

16.2.1.3 Oil-fired heaters shall comply with Section 11.5. [**241**:5.2.3]

16.2.1.4 Fuel supplies for liquefied petroleum gas-fired heaters shall comply with NFPA 54, *National Fuel Gas Code*, and Chapter 69. [**241**:5.2.4]

16.2.1.5* Refueling operations shall be conducted in an approved manner. [**241**:5.2.5]

16.2.1.6 Heating devices shall be situated so that they are secured. [**241**:5.2.6]

16.2.1.7 Heating devices shall be installed in accordance with their listing, including clearance to combustible material, equipment, or construction. [**241**:5.2.7]

16.2.1.8* Temporary heating equipment, where utilized, shall be monitored for safe operation and maintained by properly trained personnel. [**241**:5.2.8]

16.2.2 Waste Disposal.

16.2.2.1* Accumulations of combustible waste material, dust, and debris shall be removed from the structure and its immediate vicinity at the end of each work shift or more frequently as necessary for safe operations. [**241**:5.4.1]

16.2.2.2 Rubbish shall not be burned on the premises without first obtaining a permit from the AHJ. *(See Section 10.11.)* [**241**:5.4.2]

16.2.2.3 Materials susceptible to spontaneous ignition, such as oily rags, shall be stored in a listed disposal container. [**241**:5.4.3]

16.2.2.4* When a trash chute is used, an approved safety plan shall be submitted to the AHJ. [**241**:5.4.4]

16.2.3 Flammable and Combustible Liquids and Flammable Gases.

16.2.3.1 Storage.

16.2.3.1.1 Storage of flammable and combustible liquids shall be in accordance with Chapter 66, unless otherwise modified by 16.2.3. [**241**:5.5.1.1]

16.2.3.1.2* Storage of Class I and Class II liquids shall not exceed 60 gal (227 L) within 50 ft (15 m) of the structure. [**241**:5.5.1.2]

16.2.3.1.3 Storage areas shall be kept free of weeds, debris, and combustible materials not necessary to the storage. [**241**:5.5.1.3]

16.2.3.1.4 Open flames and smoking shall not be permitted in flammable and combustible liquids storage areas. [**241**:5.5.1.4]

16.2.3.1.5 Such storage areas shall be appropriately posted as "no smoking" areas. [**241**:5.5.1.5]

16.2.3.1.6 Storage areas shall be appropriately posted with markings in accordance with NFPA 704, *Standard System for the Identification of the Hazards of Materials for Emergency Response.* [**241**:5.5.1.6]

16.2.3.2 Handling of Flammable and Combustible Liquids at Point of Final Use.

16.2.3.2.1 Handling of flammable and combustible liquids shall be in accordance with Chapter 66, except as modified by 16.2.3.2.2 through 16.2.3.2.4. [**241**:5.5.2.1]

16.2.3.2.2 Class I and Class II liquids shall be kept in approved safety containers. [**241**:5.5.2.2]

16.2.3.2.3 Means shall be provided to dispose of leakage and spills promptly and safely. [**241**:5.5.2.3]

16.2.3.2.4* Class I liquids shall be dispensed only where there are no open flames or other sources of ignition within the possible path of vapor travel. [**241**:5.5.2.4]

16.2.3.3 Storage and Handling of Combustible and Flammable Gases.

16.2.3.3.1 Storage and handling of combustible and flammable gases shall be in accordance with NFPA 54 and Chapter 69. [**241**:5.5.3.1]

16.2.3.3.2 Open flames and smoking shall not be permitted in flammable gas storage areas. [**241**:5.5.3.2]

16.3 Fire Protection.

16.3.1 Fire Safety Program. An overall construction or demolition fire safety program shall be developed. Essential items to be emphasized include the following:

(1) Good housekeeping
(2) On-site security
(3) Installation of new fire protection systems as construction progresses
(4) Preservation of existing systems during demolition
(5) Organization and training of an on-site fire brigade
(6) Development of a prefire plan with the local fire department
(7) Rapid communication
(8) Consideration of special hazards resulting from previous occupancies
(9) Protection of existing structures and equipment from exposure fires resulting from construction, alteration, and demolition operations [**241**:7.1]

16.3.2 Owner's Responsibility for Fire Protection.

16.3.2.1* The owner shall designate a person who shall be responsible for the fire prevention program and who shall ensure that it is carried out to completion. [**241**:7.2.1]

16.3.2.1.1 The fire prevention program manager shall have the authority to enforce the provisions of NFPA 241 and this chapter and other applicable fire protection standards. [**241**:7.2.1.1]

16.3.2.1.2 The fire prevention program manager shall have knowledge of the applicable fire protection standards, available fire protection systems, and fire inspection procedures. [**241**:7.2.1.2]

16.3.2.1.3 Inspection records shall be available for review by the AHJ. [**241**:7.2.1.3]

16.3.2.2 Where guard service is provided, the fire prevention program manager shall be responsible for the guard service. [**241**:7.2.2]

16.3.2.3* Prefire Plans.

16.3.2.3.1 Where there is public fire protection or a private fire brigade, the manager shall be responsible for the development of prefire plans in conjunction with the fire agencies. [**241**:7.2.3.1]

16.3.2.3.2 Prefire plans shall be updated as necessary. [**241**:7.2.3.2]

16.3.2.3.3 The prefire plan shall include provisions for on-site visits by the fire agency. [**241:**7.2.3.3]

16.3.2.4 Program Manager Responsibilities.

16.3.2.4.1 The manager shall be responsible for ensuring that proper training in the use of protection equipment has been provided. [**241:**7.2.4.1]

16.3.2.4.2 The manager shall be responsible for the presence of adequate numbers and types of fire protection devices and appliances and for their proper maintenance. [**241:**7.2.4.2]

16.3.2.4.3 The manager shall be responsible for supervising the permit system for hot work operations. *(See Section 5.1 of NFPA 241.)* [**241:**7.2.4.3]

16.3.2.4.4 A weekly self-inspection program shall be implemented, with records maintained and made available. [**241:**7.2.4.4]

16.3.2.4.5* Impairments to the fire protection systems or fire alarm, detection, or communications systems shall be authorized only by the fire prevention program manager. [**241:**7.2.4.5]

16.3.2.4.6 Temporary protective coverings used on fire protection devices during renovations, such as painting, shall be removed promptly when work has been completed in the area. [**241:**7.2.4.6]

16.3.2.5 Site Security.

16.3.2.5.1* Guard service shall be provided where required by the AHJ. [**241:**7.2.5.1]

16.3.2.5.2* Where guard service is provided, the guard(s) shall be trained in the following:

(1) Notification procedures that include calling the fire department and management personnel
(2) Knowledge of fire protection equipment
(3) Familiarization with fire hazards
(4) Use of construction elevators [**241:**7.2.5.2]

16.3.2.5.3 Guards shall be informed of any special status of emergency equipment or hazards. [**241:**7.2.5.3]

16.3.2.5.4* Security fences shall be provided where required by the AHJ. [**241:**7.2.5.4]

16.3.2.5.5* Entrances (e.g., doors and windows) to the structure under construction, alteration, or demolition shall be secured where required by the AHJ. [**241:**7.2.5.5]

16.3.3* Fire Alarm Reporting.

16.3.3.1 There shall be a readily available public fire alarm box near the premises, telephone service to the responding fire department, or equivalent facilities. [**241:**7.4.1]

16.3.3.2 Instructions shall be issued for the immediate notification of the fire department in the case of a fire. Where telephone service is employed, the local fire department number and site address shall be conspicuously posted near each telephone. [**241:**7.4.2]

16.3.4 Access for Fire Fighting.

16.3.4.1 A suitable location at the site shall be designated as a command post and provided with plans, emergency information, keys, communications, and equipment, as needed. [**241:**7.5.1]

16.3.4.2 The person in charge of fire protection shall respond to the location command post whenever fire occurs. [**241:**7.5.2]

16.3.4.3 Where access to or within a structure or an area is unduly difficult because of secured openings or where immediate access is necessary for life-saving or fire-fighting purposes, the AHJ shall be permitted to require a key box to be installed in an accessible location. [**241:**7.5.3]

16.3.4.4 The key box shall be an approved type and shall contain keys to gain access as required by the AHJ. *(See Section 18.2.)* [**241:**7.5.4]

16.3.4.5 Stairs.

16.3.4.5.1 In all buildings over one story in height, at least one stairway shall be provided that is in usable condition at all times and that meets the requirements of NFPA *101*. [**241:**7.5.6.1]

16.3.4.5.2 This stairway shall be extended upward as each floor is installed in new construction and maintained for each floor still remaining during demolition. [**241:**7.5.6.2]

16.3.4.5.3 The stairway shall be lighted. [**241:**7.5.6.3]

16.3.4.5.4 During construction, the stairway shall be enclosed where the building exterior walls are in place. [**241:**7.5.6.4]

16.3.4.5.5 All exit stairs shall be provided with stair identification signs to include the floor level, stair designation, and exit path direction as required to provide for safe egress. [**241:**7.5.6.5]

16.3.5 Standpipes. In all new buildings in which standpipes are required or where standpipes exist in buildings being altered or demolished, such standpipes shall be maintained in conformity with the progress of building construction in such a manner that they are always ready for use. [**241:**7.6]

16.3.6* First-Aid Fire-Fighting Equipment.

16.3.6.1* The suitability, distribution, and maintenance of extinguishers shall be in accordance with Section 13.6. [**241:**7.7.1]

16.3.6.2 Wherever a toolhouse, storeroom, or other shanty is located in or adjacent to the building under construction or demolition, or where a room or space within that building is used for storage, a dressing room, or a workshop, at least one approved extinguisher shall be provided and maintained in an accessible location, unless otherwise permitted by 16.3.6.3. [**241:**7.7.2]

16.3.6.3 The requirement of 16.3.6.2 shall be permitted to be waived where the structure does not exceed 150 ft^2 (14 m^2) in floor area or is equipped with automatic sprinklers or other approved protection. [**241:**7.7.3]

16.3.6.4 At least one approved fire extinguisher also shall be provided in plain sight on each floor at each usable stairway as soon as combustible material accumulates. [**241:**7.7.4]

16.3.6.5 Suitable fire extinguishers shall be provided on self-propelled equipment. [**241:**7.7.5]

16.3.6.6* Free access to permanent, temporary, or portable first aid fire equipment shall be maintained at all times. [**241:**7.7.6]

16.4 Safeguarding Construction and Alteration Operations.

16.4.1* Scaffolding, Shoring, and Forms.

16.4.1.1 Accumulations of unnecessary combustible forms or form lumber shall be prohibited. [**241:**8.2.1]

16.4.1.2 Combustible forms or form lumber shall be brought into the structure only when needed. [**241:**8.2.2]

16.4.1.3 Combustible forms or form lumber shall be removed from the structure as soon as stripping is complete. [**241:**8.2.3]

16.4.1.4 Those portions of the structure where combustible forms are present shall not be used for the storage of other combustible building materials. [**241:**8.2.4]

16.4.1.5* During forming and stripping operations, portable fire extinguishers or charged hose lines shall be provided to protect the additional combustible loading adequately. [**241:**8.2.5]

16.4.2 Temporary Separation Walls.

16.4.2.1 Protection shall be provided to separate an occupied portion of the structure from a portion of the structure undergoing alteration, construction, or demolition operations when such operations are considered as having a higher level of hazard than the occupied portion of the building. [**241:**8.6.2.1]

16.4.2.2 Walls shall have at least a 1-hour fire resistance rating. [**241:**8.6.2.2]

16.4.2.3 Opening protectives shall have at least a 45-minute fire protection rating. [**241:**8.6.2.3]

16.4.2.4* Nonrated walls and opening protectives shall be permitted when an approved automatic sprinkler system is installed. [**241:**8.6.2.4]

16.4.3 Fire Protection During Construction.

16.4.3.1 Water Supply.

16.4.3.1.1* A water supply for fire protection, either temporary or permanent, shall be made available as soon as combustible material accumulates. [**241:**8.7.2.1]

16.4.3.1.2 There shall be no delay in the installation of fire protection equipment. *(See A.16.4.1.5.)* [**241:**8.7.2.2]

16.4.3.1.3 Where underground water mains and hydrants are to be provided, they shall be installed, completed, and in service prior to construction work. [**241:**8.7.2.3]

16.4.3.2 Sprinkler Protection.

16.4.3.2.1* If automatic sprinkler protection is to be provided, the installation shall be placed in service as soon as practicable. [**241:**8.7.3.1]

16.4.3.2.2 The details of installation shall be in accordance with NFPA 13. [**241:**8.7.3.2]

16.4.3.2.3 Where sprinklers are required for safety to life, the building shall not be occupied until the sprinkler installation has been entirely completed and tested so that the protection is not susceptible to frequent impairment caused by testing and correction, unless otherwise permitted by 16.4.3.2.4. [**241:**8.7.3.3]

16.4.3.2.4 The provision of 16.4.3.2.3 shall not prohibit occupancy of the lower floors of a building, even where the upper floors are in various stages of construction or protection, provided the following conditions are satisfied:

(1) The sprinkler protection of the lower occupied floors is completed and tested in accordance with 16.4.3.2.3.
(2) The sprinkler protection of the upper floors is supplied by entirely separate systems and separate control valves so that the absence or incompleteness of protection in no way impairs the sprinkler protection of the occupied lower floors. [**241:**8.7.3.4]

16.4.3.2.5 The operation of sprinkler control valves shall be permitted only by properly authorized personnel and shall be accompanied by the notification of duly designated parties. [**241:**8.7.3.5]

16.4.3.2.6 Where the sprinkler protection is regularly turned off and on to facilitate connection of newly completed segments, the sprinkler control valves shall be checked at the end of each work shift to ascertain that protection is in service. [**241:**8.7.3.6]

16.4.3.3 Standpipes.

16.4.3.3.1 General.

16.4.3.3.1.1* The pipe size, hose valves, hose, water supply, and other details for new construction shall be in accordance with Section 13.2. [**241:**8.7.4.1.1]

16.4.3.3.1.2 On permanent Type II and Type III standpipes, hose and nozzles shall be provided and made ready for use as soon as the water supply is available to the standpipe, unless otherwise permitted by 16.4.3.3.1.3. [**241:**8.7.4.1.2]

16.4.3.3.1.3* In combined systems where occupant hose is not required, temporary hose and nozzles shall be provided during construction. [**241:**8.7.4.1.3]

16.4.3.3.2 Standpipe Installations in Buildings Under Construction. Where required by the AHJ, in buildings under construction, a standpipe system, either temporary or permanent in nature, shall be installed in accordance with 16.4.3.3.2.1 through 16.4.3.3.2.10. [**241:**8.7.4.2]

16.4.3.3.2.1 The standpipes shall be provided with conspicuously marked and readily accessible fire department connections on the outside of the building at the street level and shall have at least one standard hose outlet at each floor. [**241:**8.7.4.2.1]

16.4.3.3.2.2 The pipe sizes, hose valves, hose, water supply, and other details for new construction shall be in accordance with NFPA 241. [**241:**8.7.4.2.2]

16.4.3.3.2.3 The standpipes shall be securely supported and restrained at each alternate floor. [**241:**8.7.4.2.3]

16.4.3.3.2.4* At least one approved hose valve for attaching fire department hose shall be provided at each intermediate landing or floor level in the exit stairway, as determined by the AHJ. [**241:**8.7.4.2.4]

16.4.3.3.2.5 Valves shall be kept closed at all times and guarded against mechanical injury. [**241:**8.7.4.2.5]

16.4.3.3.2.6 Hose valves shall have NH standard external threads for the valve size specified in accordance with NFPA 1963, *Standard for Fire Hose Connections*, unless modified by 16.4.3.3.2.7. [**241:**8.7.4.2.6]

16.4.3.3.2.7 Where local fire department connections do not conform to NFPA 1963, the AHJ shall designate the connection to be used. [**241:**8.7.4.2.7]

16.4.3.3.2.8* The standpipes shall be extended up with each floor and shall be securely capped at the top. [**241:**8.7.4.2.8]

16.4.3.3.2.9 Top hose outlets shall be not more than one floor below the highest forms, staging, and similar combustibles at all times. [**241:**8.7.4.2.9]

16.4.3.3.2.10 Temporary standpipes shall remain in service until the permanent standpipe installation is complete. [**241**:8.7.4.2.10]

16.4.4 Alteration of Buildings.

16.4.4.1 Where the building is protected by fire protection systems, such systems shall be maintained operational at all times during alteration.

16.4.4.2 Where alteration requires modification of a portion of the fire protection system, the remainder of the system shall be kept in service and the fire department shall be notified.

16.4.4.3 When it is necessary to shut down the system, the AHJ shall have the authority to require alternate measures of protection until the system is returned to service.

16.4.4.4 The fire department shall be notified when the system is shut down and when the system is returned to service.

16.4.4.5 All required exit components shall be maintained in accordance with this *Code* as deemed necessary by the AHJ.

16.4.4.6 Fire-resistive assemblies and construction shall be maintained.

16.5 Fire Safety During Demolition.

16.5.1 If a building intended to be demolished contains a sprinkler system, such system shall not be rendered inoperative without approval of the AHJ.

16.5.2 Demolition operations involving the use of cutting and welding shall be done in accordance with Chapter 41.

16.5.3 Combustible waste material shall not be burned at the demolition site unless approved by the AHJ. Combustible materials shall be removed from the site as often as necessary to minimize the hazards therefrom. *(See Section 10.11.)*

16.5.4 Where in the opinion of the AHJ the demolition site is of a hazardous nature, qualified personnel shall serve as an on-site fire watch.

16.6 Torch-Applied Roofing Systems.

16.6.1 Permits. Permits, where required, shall comply with Section 1.12.

16.6.2 Torch-applied roofing systems shall be installed in accordance with Chapter 7 of NFPA 241, *Standard for Safeguarding Construction, Alteration, and Demolition Operations.*

16.7 Tar Kettles.

16.7.1 General.

16.7.1.1 The provisions of Section 16.7 shall apply to any type of equipment including, but not limited to, chassis-mounted equipment used for preheating or heating tar, asphalt, pitch, or similar substances for roofs, floors, pipes, or similar objects.

16.7.1.2 Permits. Permits, where required, shall comply with Section 1.12.

16.7.1.3 Operating kettles shall not be located inside of or on the roof of any building.

16.7.1.4 Tar Kettle Location. The kettle shall be operated in a controlled area. The area shall be identified by the use of traffic cones, barriers, and other suitable means as approved by the AHJ.

16.7.1.5 Kettle Supervision.

16.7.1.5.1 An operating kettle shall be attended by a minimum of one employee who is knowledgeable of the operations and hazards.

16.7.1.5.2 The employee shall be within 25 ft (7.6 m) of the kettle and shall have the kettle within sight.

16.7.1.6 Fire Extinguishers.

16.7.1.6.1 Two approved 4A:40-B:C fire extinguishers shall be provided and maintained within 25 ft (7.6 m) of the operating kettle.

16.7.1.6.2* A minimum of one approved 4A:40-B:C fire extinguisher shall be provided and maintained on the roof in close proximity to the roofing operations while the roofing material is being applied.

16.7.1.6.3 Fire extinguishers shall be mounted in an accessible and visible or identified location.

16.7.1.7 Exits.

16.7.1.7.1 Roofing kettles shall not block exits, means of egress, gates, roadways, or entrances.

16.7.1.7.2 Kettles shall not be closer than 10 ft (3 m) from exits or means of egress.

16.7.2 Fuel System.

16.7.2.1 Fuel containers shall be constructed and approved for the use for which they were designed.

16.7.2.2 Liquefied petroleum gas (LP-Gas) containers, hose, regulators, and burners shall conform to the requirements in Chapter 69.

16.7.2.3 LP-Gas cylinders shall be secured to prevent accidental tipover.

16.7.2.4 Regulators shall be required on any cylinders.

16.7.2.5 Where, in the opinion of the AHJ, there is danger of physical damage to the container, protection shall be provided to prevent such physical damage.

16.7.2.6 LP-Gas containers for roofing kettles shall not be used in any building.

16.7.3 Maintenance.

16.7.3.1 Roofing kettles and all integral working parts shall be in good working condition and shall be maintained free of excessive residue.

16.7.3.2 All piping used for pumping heated material to the roof shall be installed in a manner to prevent loss of heated material.

16.7.3.3 Flexible steel piping shall not be used on the vertical extension of piping systems.

16.7.3.4 Flexible steel piping shall be limited to those connections that are immediately adjacent to the pump kettle or discharge outlet.

16.7.3.5 No single length of flexible piping shall exceed 6 ft (1.8 m) in length, and all piping shall be able to withstand a pressure of at least four times the working pressure of the pump.

16.7.3.6 Roofing Kettle Doors.

16.7.3.6.1 All roofing kettles shall have doors permanently attached.

16.7.3.6.2 Roofing kettle doors shall be installed in a workmanlike manner and shall be provided with handles that allow them to be opened without the operator having to stand in front of same.

16.7.3.6.3 All kettles shall have an approved, working visible temperature gauge that indicates the temperature of the material being heated.

16.7.3.7 All kettle doors shall be tightly closed and latched when in transit.

16.7.4 Construction.

16.7.4.1 The materials and methods of construction of roofing kettles shall be acceptable to the AHJ.

16.7.4.2 Minimum Requirements.

16.7.4.2.1 Paragraph 16.7.4.2 shall apply to all roofing kettles or tar pots in excess of 1 gal (3.8 L) capacity.

16.7.4.2.2 No roofing kettle shall have a capacity in excess of 5 barrels (bbl).

16.7.4.2.3 Roofing kettles of 2 bbl capacity or less shall be constructed of steel sheet having a thickness of not less than 0.105 in. (No. 12 Manufacturers' Standard Gauge). Kettles of more than 2 bbl capacity shall be constructed of steel sheet having a thickness of not less than 0.135 in. (No. 10 Manufacturers' Standard Gauge). All supports, corners, and the top and bottom of the fire box shall be bound with angle iron or other reinforcements approved by the AHJ. All doors shall be hinged, closely fitted, and adequately latched. Fire boxes shall be of sufficient height from the ground or shall be provided with a system of shields or insulation to prevent heat damage to the street surface.

16.7.4.2.4 Lids that can be gravity operated shall be provided on all roofing kettles. The tops and covers of all kettles shall be constructed of steel sheet having a thickness of not less than 0.075 in. (No. 14 Manufacturers' Standard Gauge) that is close fitting and attached to the kettle with hinges that allow gravity to close the lid.

16.7.4.2.5 The chassis shall be substantially constructed and capable of carrying the load imposed upon it whether it is standing still or being transported.

16.7.4.2.6 Fuel containers, burners, and related appurtenances of roofing kettles in which LP-Gas is used for heating shall comply with all the requirements of Chapter 69.

16.7.4.2.7 Fuel containers that operate under air pressure shall not exceed 20 gal (76 L) in capacity and shall be subject to the approval of the AHJ.

16.7.4.2.8 All fuel containers shall be maintained in accordance with applicable NFPA codes and standards or shall be at least 10 ft (3 m) from the burner flame or at least 2 ft (0.6 m) therefrom when properly insulated from heat or flame.

16.8 Asbestos Removal.

16.8.1 Notification. The AHJ and the fire department shall be notified 24 hours prior to the commencement and closure of asbestos removal operations.

16.8.2 Permits. Permits, where required, shall comply with Section 1.12.

16.8.3 Signs. Approved signs shall be posted at the entrance, exit and exit access door, decontamination areas, and waste disposal areas for asbestos removal operations.

16.8.3.1 The signs shall state that asbestos is being removed from the area, that asbestos is a suspected carcinogen, and that proper respiratory protection is required.

16.8.3.2 Signs shall have a reflective surface, and lettering shall be a minimum of 2 in. (51 mm) high.

Chapter 17 Wildland Urban Interface

17.1 General. The planning, construction, maintenance, education, and management elements for the protection of life and property from wildfire shall comply with NFPA 1144, *Standard for Protection of Life and Property from Wildfire*, and Chapter 17.

17.2 Plans. The plans for construction and development within the wildland urban interface shall be submitted to the AHJ for review and approval.

17.3 Wildland Fire–Prone Areas.

17.3.1* Safeguards. Safeguards to prevent the occurrence of fires and to provide adequate fire protection and mitigation measures in hazardous fire areas shall be provided and maintained in accordance with Section 17.3.

17.3.2* Permits and Approvals. Permits for use of hazardous areas shall not be issued when public safety would be at risk, as determined by the AHJ. *(See Section 1.12 for additional requirements for permits.)*

17.3.3 Restricted Entry.

17.3.3.1 The AHJ shall determine and publicly announce when hazardous fire areas shall be closed to entry, and when such areas shall again be opened to entry.

17.3.3.2 Unauthorized persons shall not be permitted to enter or remain in closed hazardous fire areas.

17.3.3.3 Signs. Approved signs prohibiting entry by unauthorized persons shall be placed on every closed area and access point.

17.3.4 Use of Flammable Materials and Procedures.

17.3.4.1 Smoking. Lighting, igniting, or otherwise setting fire to any smoking material shall be prohibited unless within structures or smoking areas approved by the AHJ. *(See Section 10.10 for additional requirements on smoking.)*

17.3.4.2 Tracer Bullets, Tracer Charges, Rockets, and Model Aircraft.

17.3.4.2.1 Tracer bullets and tracer charges shall not be possessed, fired, or caused to be fired into or across hazardous fire areas.

17.3.4.2.2 Rockets, model planes, gliders, and balloons powered with an engine, propellant, or other feature liable to start or cause fire shall not be fired or projected into or across hazardous fire areas.

17.3.4.3 Explosives and Blasting. Explosives shall not be possessed, kept, stored, sold, offered for sale, given away, used, discharged, transported, or disposed of within hazardous fire areas except as permitted by the AHJ. *(See Chapter 65 for additional guidance.)*

17.3.4.4 Fireworks. Fireworks shall not be used or possessed in hazardous fire areas unless permitted by the AHJ. *(See Chapter 65 for additional guidance.)*

17.3.4.5 Apiaries. Lighted and smoldering material used in connection with smoking bees shall not be allowed in or upon hazardous fire areas except by permit from the AHJ.

17.3.4.6 Open-Flame Devices.

17.3.4.6.1* Welding torches, tar pots, decorative torches, and other devices, machines, or processes liable to start or cause fire shall not be operated or used in or upon hazardous fire areas, except by permit from the AHJ.

17.3.4.6.2 Flame-employing devices, such as lanterns or kerosene road flares, and fuses shall not be operated or used as a signal or marker in or upon hazardous fire areas unless at the scene of emergencies or railroad operations. *(See Chapter 16 and Chapter 65 for additional guidance.)*

17.3.4.7 Outdoor Fires.

17.3.4.7.1* Outdoor fires shall not be built, ignited, or maintained in or upon hazardous fire areas, except by permit from the AHJ.

17.3.4.7.2 Permanent barbecues, portable barbecues, outdoor fireplaces, or grills shall not be used for the disposal of rubbish, trash, or combustible waste material. *(See Section 10.11 for additional guidance.)*

17.3.4.8 Incinerators and Fireplaces.

17.3.4.8.1 Incinerators, outdoor fireplaces, permanent barbecues, and grills shall not be built, installed, or maintained in hazardous fire areas without prior approval of the AHJ.

17.3.4.8.2 Incinerators, outdoor fireplaces, permanent barbecues, and grills shall be maintained in good repair and in a safe condition at all times.

17.3.4.8.3 Openings in incinerators, outdoor fireplaces, permanent barbecues, and grills shall be provided with an approved spark arrester, screen, or door.

17.3.4.9 Spark Arresters. Chimneys used in conjunction with outdoor fireplaces, barbecues, incinerators, or heating appliances in which solid or liquid fuel is used, upon buildings, structures, or premises located within 10 ft (3.05 m) of hazardous vegetation shall be provided with a spark arrester in accordance with Section 8.7 of NFPA 1144.

17.3.5 Clearance of Brush and Vegetative Growth.

17.3.5.1 Electrical Transmission Lines.

17.3.5.1.1 Clearance of brush and vegetative growth from electrical transmission and distribution line(s) shall be provided and maintained in accordance with 17.3.5.1.

17.3.5.1.2 A combustible-free space around poles and towers shall consist of a clearing of not less than 10 ft (3.05 m) in each direction from the outer circumference of the pole or tower during such periods of time as designated by the AHJ.

17.3.5.1.3 Trimming Clearance.

17.3.5.1.3.1 At the time of trimming, clearances not less than those established by Table 17.3.5.1.3.1 shall be provided.

Table 17.3.5.1.3.1 Minimum Clearances between Vegetation and Electrical Lines at Time of Trimming

	Minimal Radial Clearance from Conductor	
Line Voltage	**ft**	**m**
2400–72,000	4	1.2
72,001–110,000	6	1.8
110,001–300,000	10	3.0
300,001 or more	15	4.6

17.3.5.1.3.2 The radial clearances in Table 17.3.5.1.3.1 are minimum clearances that shall be established at time of trimming between the vegetation and the energized conductors and associated live parts.

17.3.5.1.4 Clearances not less than those established by Table 17.3.5.1.4 shall be maintained during such periods of time as designated by the AHJ.

Table 17.3.5.1.4 Minimum Clearances between Vegetation and Electrical Lines to Be Maintained

	Minimum Clearance	
Line Voltage	**in.**	**cm**
750–35,000	6	15.2
35,001–60,000	12	30.5
60,001–115,000	19	48.3
115,001–230,000	30.5	77.5
230,001–500,000	115	292

17.3.5.1.4.1 The site-specific clearance achieved, at the time of pruning, shall vary based on species' growth rates, the utility company specific trim cycle, the potential line sway due to wind, line sway due to electrical loading and ambient temperature, and the tree's location in proximity to the high voltage lines.

17.3.5.1.4.2 The AHJ shall establish minimum clearances different than those specified by Table 17.3.5.1.4 when evidence substantiating such other clearances is submitted to the AHJ and approved.

17.3.5.1.5* Electrical Power Line Emergencies. During emergencies, the utility company shall perform the required work to the extent necessary to clear the hazard.

17.3.5.2 Structures.

17.3.5.2.1 Persons owning, leasing, controlling, operating, or maintaining buildings or structures in, upon, or adjoining hazardous fire areas, and persons owning, leasing, or controlling land adjacent to such buildings or structures, shall maintain an effective defensible space in accordance with NFPA 1144.

17.3.5.2.2 Where required by the AHJ because of extra hazardous conditions, additional areas shall be maintained to include additional defensible space from buildings or structures, trees adjacent to or overhanging a building shall be maintained free of deadwood, and the roof of a structure shall be free of leaves, needles, or other dead vegetative growth.

17.3.5.3 Roadways. Areas within 10 ft (3 m) on each side of portions of highways and private streets shall be cleared of combustible vegetation and other combustible growth. Single specimens of trees, shrubbery, or cultivated ground cover such as green grass, ivy, succulents, or similar plants used as ground covers, shall be permitted to be exempt provided that they do not form a means of readily transmitting fire.

17.3.6 Unusual Circumstances. The AHJ shall determine that difficult terrain, danger of erosion, or other unusual circumstances could require additional safeguards.

17.3.7 Fire Roads, Firebreaks, and Emergency Access.

17.3.7.1 The provisions of 17.3.7, NFPA 1141, *Standard for Fire Protection in Planned Building Groups*, and NFPA 1144 shall be used to determine the design, clearances, and provisions for emergency access (ingress and egress).

17.3.7.2 Unauthorized vehicles shall not be driven upon fire roads or firebreaks. Vehicles shall not be parked in a manner that obstructs the entrance to a fire road or firebreak.

17.3.7.3 Radio and television aerials, guy wires, and other obstructions shall not be installed or maintained on fire roads or firebreaks unless the vertical clearance is sufficient to allow the movement of fire and emergency apparatus.

17.3.7.4 Motorcycles, motor scooters, and motor vehicles shall not be operated within hazardous fire areas, except upon clearly established public or private roads.

17.3.8 Tampering with Fire Safety Equipment. See Section 10.8 for requirements on tampering with fire safety equipment.

17.3.9 Maintenance. See Section 10.4 for requirements on maintenance.

Chapter 18 Fire Department Access and Water Supply

18.1 General. Fire department access and water supplies shall comply with this chapter.

18.1.1 Plans.

18.1.1.1 Fire Apparatus Access. Plans for fire apparatus access roads shall be submitted to the fire department for review and approval prior to construction.

18.1.1.2 Fire Hydrant Systems. Plans and specifications for fire hydrant systems shall be submitted to the fire department for review and approval prior to construction.

18.2 Fire Department Access.

18.2.1 Fire department access and fire department access roads shall be provided and maintained in accordance with Section 18.2.

18.2.2* Access to Structures or Areas.

18.2.2.1 Access Box(es). The AHJ shall have the authority to require an access box(es) to be installed in an accessible location where access to or within a structure or area is difficult because of security.

18.2.2.2 Access to Gated Subdivisions or Developments. The AHJ shall have the authority to require fire department access be provided to gated subdivisions or developments through the use of an approved device or system.

18.2.2.3 Access Maintenance. The owner or occupant of a structure or area, with required fire department access as specified in 18.2.2.1 or 18.2.2.2, shall notify the AHJ when the access is modified in a manner that could prevent fire department access.

18.2.3 Fire Department Access Roads.

18.2.3.1 Required Access.

18.2.3.1.1 Approved fire department access roads shall be provided for every facility, building, or portion of a building hereafter constructed or relocated.

18.2.3.1.2 Fire department access roads shall consist of roadways, fire lanes, parking lots lanes, or a combination thereof.

18.2.3.1.3* When not more than two one- and two-family dwellings or private garages, carports, sheds, agricultural buildings, and detached buildings or structures 400 ft^2 (37 m^2) or less are present, the requirements of 18.2.3.1 through 18.2.3.2.1 shall be permitted to be modified by the AHJ.

18.2.3.1.4 When fire department access roads cannot be installed due to location on property, topography, waterways, nonnegotiable grades, or other similar conditions, the AHJ shall be authorized to require additional fire protection features.

18.2.3.2 Access to Building.

18.2.3.2.1 A fire department access road shall extend to within 50 ft (15 m) of at least one exterior door that can be opened from the outside and that provides access to the interior of the building.

18.2.3.2.1.1 Where a one- or two-family dwelling is protected with an approved automatic sprinkler system that is installed in accordance with NFPA 13D, the distance in 18.2.3.2.1 shall be permitted to be increased to 150 ft (46 m).

18.2.3.2.2 Fire department access roads shall be provided such that any portion of the facility or any portion of an exterior wall of the first story of the building is located not more than 150 ft (46 m) from fire department access roads as measured by an approved route around the exterior of the building or facility.

18.2.3.2.2.1 When buildings are protected throughout with an approved automatic sprinkler system that is installed in accordance with NFPA 13, NFPA 13D, or NFPA 13R, the distance in 18.2.3.2.2 shall be permitted to be increased to 450 ft (137 m).

18.2.3.3 Multiple Access Roads. More than one fire department access road shall be provided when it is determined by the AHJ that access by a single road could be impaired by vehicle congestion, condition of terrain, climatic conditions, or other factors that could limit access.

18.2.3.4 Specifications.

18.2.3.4.1 Dimensions.

18.2.3.4.1.1 Fire department access roads shall have an unobstructed width of not less than 20 ft (6.1 m).

18.2.3.4.1.2 Fire department access roads shall have an unobstructed vertical clearance of not less than 13 ft 6 in. (4.1 m).

18.2.3.4.1.2.1 Vertical clearance shall be permitted to be reduced, provided such reduction does not impair access by fire apparatus, and approved signs are installed and maintained indicating the established vertical clearance when approved.

18.2.3.4.1.2.2 Vertical clearances or widths shall be increased when vertical clearances or widths are not adequate to accommodate fire apparatus.

18.2.3.4.2 Surface. Fire department access roads shall be designed and maintained to support the imposed loads of fire apparatus and shall be provided with an all-weather driving surface.

18.2.3.4.3 Turning Radius.

18.2.3.4.3.1 The turning radius of a fire department access road shall be as approved by the AHJ.

18.2.3.4.3.2 Turns in fire department access roads shall maintain the minimum road width.

18.2.3.4.4 Dead Ends. Dead-end fire department access roads in excess of 150 ft (46 m) in length shall be provided with approved provisions for the fire apparatus to turn around.

18.2.3.4.5 Bridges.

18.2.3.4.5.1 When a bridge is required to be used as part of a fire department access road, it shall be constructed and maintained in accordance with nationally recognized standards.

18.2.3.4.5.2 The bridge shall be designed for a live load sufficient to carry the imposed loads of fire apparatus.

18.2.3.4.5.3 Vehicle load limits shall be posted at both entrances to bridges where required by the AHJ.

18.2.3.4.6 Grade.

18.2.3.4.6.1 The gradient for a fire department access road shall not exceed the maximum approved.

18.2.3.4.6.2* The angle of approach and departure for any means of fire department access road shall not exceed 1 ft drop in 20 ft (0.3 m drop in 6 m) or the design limitations of the fire apparatus of the fire department, and shall be subject to approval by the AHJ.

18.2.3.4.6.3 Fire department access roads connecting to roadways shall be provided with curb cuts extending at least 2 ft (0.61 m) beyond each edge of the fire lane.

18.2.3.4.7 Traffic Calming Devices. The design and use of traffic calming devices shall be approved by the AHJ.

18.2.3.5 Marking of Fire Apparatus Access Road.

18.2.3.5.1 Where required by the AHJ, approved signs or other approved notices shall be provided and maintained to identify fire department access roads or to prohibit the obstruction thereof or both.

18.2.3.5.2 A marked fire apparatus access road shall also be known as a fire lane.

18.2.4* Obstruction and Control of Fire Department Access Road.

18.2.4.1 General.

18.2.4.1.1 The required width of a fire department access road shall not be obstructed in any manner, including by the parking of vehicles.

18.2.4.1.2 Minimum required widths and clearances established under 18.2.3.4 shall be maintained at all times.

18.2.4.1.3* Facilities and structures shall be maintained in a manner that does not impair or impede accessibility for fire department operations.

18.2.4.1.4 Entrances to fire departments access roads that have been closed with gates and barriers in accordance with 18.2.4.2.1 shall not be obstructed by parked vehicles.

18.2.4.2 Closure of Accessways.

18.2.4.2.1 The AHJ shall be authorized to require the installation and maintenance of gates or other approved barricades across roads, trails, or other accessways not including public streets, alleys, or highways.

18.2.4.2.2 Where required, gates and barricades shall be secured in an approved manner.

18.2.4.2.3 Roads, trails, and other accessways that have been closed and obstructed in the manner prescribed by 18.2.4.2.1 shall not be trespassed upon or used unless authorized by the owner and the AHJ.

18.2.4.2.4 Public officers acting within their scope of duty shall be permitted to access restricted property identified in 18.2.4.2.1.

18.2.4.2.5 Locks, gates, doors, barricades, chains, enclosures, signs, tags, or seals that have been installed by the fire department or by its order or under its control shall not be removed, unlocked, destroyed, tampered with, or otherwise vandalized in any manner.

18.2.4.2.6 When authorized by the AHJ, public officers acting within their scope of duty shall be permitted to obtain access through secured means identified in 18.2.4.2.1.

18.3 Water Supplies and Fire Hydrants.

18.3.1* An approved water supply capable of supplying the required fire flow for fire protection shall be provided to all premises upon which facilities, buildings, or portions of buildings are hereafter constructed or moved into the jurisdiction.

18.3.2* Where no adequate or reliable water distribution system exists, approved reservoirs, pressure tanks, elevated tanks, fire department tanker shuttles, or other approved systems capable of providing the required fire flow shall be permitted.

18.3.3* The number and type of fire hydrants and connections to other approved water supplies shall be capable of delivering the required fire flow and shall be provided at approved locations.

18.3.4 Fire hydrants and connections to other approved water supplies shall be accessible to the fire department.

18.3.5 Private water supply systems shall be tested and maintained in accordance with NFPA 25.

18.3.6 Where required by the AHJ, fire hydrants subject to vehicular damage shall be protected unless located within a public right of way.

Chapter 19 Combustible Waste and Refuse

19.1 General.

19.1.1 Permits. Permits, where required, shall comply with Section 1.12.

19.1.2 No person owning or having control of any property shall allow any combustible waste material to accumulate in any area or in any manner that creates a fire hazard to life or property.

19.1.3 Combustible waste or refuse shall be properly stored or disposed of to prevent unsafe conditions.

19.1.4 Fire extinguishing capabilities approved by the AHJ including, but not limited to, fire extinguishers, water supply and hose, and earth-moving equipment shall be provided at waste disposal sites.

19.1.5 Burning debris shall not be dumped at a waste disposal site except at a remote location on the site where fire extinguishment can be accomplished before compacting, covering, or other disposal activity is carried out. *(See Section 10.11 for additional guidance.)*

19.1.6 Electrical Wiring.

19.1.6.1 Electrical wiring and equipment in any combustible fiber storage room or building shall be installed in accordance with the requirements of Section 11.1 and NFPA 70, for Class III hazardous locations.

19.1.6.2 The AHJ shall be responsible for designating the areas that require hazardous location electrical classifications and shall classify the areas in accordance with the classification system set forth in NFPA 70.

19.1.7 No Smoking.

19.1.7.1 No smoking or open flame shall be permitted in any area where combustible fibers are handled or stored or within 50 ft (15 m) of any uncovered pile of such fibers.

19.1.7.2 "No Smoking" signs shall be posted.

19.1.8 Vehicles or Conveyances Used to Transport Combustible Waste or Refuse.

19.1.8.1 Vehicles or conveyances used to transport combustible waste or refuse over public thoroughfares shall have all cargo space covered and maintained tight enough to ensure against ignition from external fire sources and the scattering of burning and combustible debris that can come in contact with ignition sources.

19.1.8.2 Transporting burning waste or refuse shall be prohibited.

19.1.8.3 Trucks or automobiles, other than mechanical handling equipment and approved industrial trucks as listed in NFPA 505, *Fire Safety Standard for Powered Industrial Trucks Including Type Designations, Areas of Use, Conversions, Maintenance, and Operations,* shall not enter any fiber storage room or building but shall be permitted to be used at loading platforms.

19.2 Combustible Waste and Refuse.

19.2.1 Rubbish Containers.

19.2.1.1 General. Rubbish containers kept outside of rooms or vaults shall not exceed 40.5 ft^3 (1.15 m^3) capacity.

19.2.1.1.1 Containers exceeding a capacity of 5⅓ ft^3 [40 gal (0.15 m^3)] shall be provided with lids.

19.2.1.1.2 Such containers and lids as described in 19.2.1.1.1 shall be constructed of noncombustible materials or nonmetallic materials complying with 19.2.1.2.

19.2.1.2 Nonmetallic Containers.

19.2.1.2.1* Nonmetallic rubbish containers exceeding a capacity of 5⅓ ft^3 [40 gal (0.15 m^3)] shall be manufactured of materials having a peak rate of heat release not exceeding 300 kW/m^2 at a flux of 50 kW/m^2 when tested in the horizontal orientation, at a thickness as used in the container but not less than of 0.25 in. (6 mm), in accordance with ASTM E 1354, *Test Method for Heat and Visible Smoke Release Rates for Materials and Products Using an Oxygen Consumption Calorimeter,* or NFPA 271, *Standard Method of Test for Heat and Visible Smoke Release Rates for Materials and Products Using an Oxygen Consumption Calorimeter.*

19.2.1.2.2 Such containers shall be permanently labeled indicating capacity and peak rate of heat release.

19.2.1.3 Removal. Combustible rubbish stored in containers outside of noncombustible vaults or rooms shall be removed from buildings at least once each working day.

19.2.1.4 Rubbish within Dumpsters. Dumpsters and containers with an individual capacity of 1.5 yd^3 [40.5 ft^3 (1.15 m^3)] or more shall not be stored in buildings or placed within 10 ft (3 m) of combustible walls, openings, or combustible roof eave lines.

19.2.1.4.1 Areas containing dumpsters or containers shall be protected by an approved automatic sprinkler system and enclosed with a fire resistance rating of 1 hour.

19.2.1.4.2 Structures of Types I and II fire-resistive construction used for dumpster or container storage shall be located not less than 10 ft (3 m) from openings and other buildings.

19.2.1.5 Commercial Rubbish-Handling Operations. Occupancies exclusively performing commercial rubbish handling or recycling shall maintain rubbish or product to be processed or recycled in one of the following ways:

(1) In approved vaults
(2) In covered metal or metal-lined receptacles or bins
(3) Completely baled and stacked in an orderly manner in an approved location

19.2.1.6 Approved metal receptacles with self-closing covers shall be provided for the storage or disposal of oil-soaked waste or cloths.

Chapter 20 Occupancy Fire Safety

20.1 Assembly Occupancies.

20.1.1 Application. New and existing assembly occupancies shall comply with Section 20.1 and NFPA *101.*

20.1.1.1 Permits. Permits, where required, shall comply with Section 1.12.

20.1.2 Flame-Retardant Requirements.

20.1.2.1 Combustible scenery of cloth, film, vegetation (dry), and similar materials shall meet the requirements of NFPA 701, *Standard Methods of Fire Tests for Flame Propagation of Textiles and Films.* [***101***:12.4.5.11.1; ***101***:13.4.5.11.1]

20.1.2.2 Foamed plastics *(see definition of cellular or foamed plastic in 3.3.32 of* NFPA *101)* shall be permitted to be used only by specific approval of the AHJ. [***101***:12.4.5.11.2; ***101***:13.4.5.11.2]

20.1.2.3 For new assembly occupancies, scenery and stage properties not separated from the audience by proscenium opening protection shall be of noncombustible materials, limited-combustible materials, or fire-retardant-treated wood. [***101***:12.4.5.11.3]

20.1.2.3.1 For existing assembly occupancies, scenery and stage properties on thrust stages shall be of noncombustible materials, limited-combustible materials, or fire retardant-treated wood. [***101***:13.4.5.11.3]

20.1.2.4 In theaters, motion picture theaters, and television stage settings, with or without horizontal projections, and in simulated caves and caverns of foamed plastic, any single fuel package shall have a heat release rate not to exceed 100 kW where tested in accordance with UL 1975, *Standard for Fire Tests for Foamed Plastics Used for Decorative Purposes.* [***101***:12.4.5.11.4]

20.1.3* Special Amusement Buildings.

20.1.3.1* General. Special amusement buildings, regardless of occupant load, shall meet the requirements for assembly occupancies in addition to the requirements of 20.1.3, unless the special amusement building is a multilevel play structure that is not more than 10 ft (3050 mm) in height and has aggregate horizontal projections not exceeding 160 ft^2 (15 m^2). [***101***:12.4.7.1; ***101***:13.4.7.1]

20.1.3.2* Automatic Sprinklers. Every special amusement building, other than buildings or structures not exceeding 10 ft (3050 mm) in height and not exceeding 160 ft^2 (15 m^2) in aggregate horizontal projection, shall be protected throughout by an approved, supervised automatic sprinkler system installed and maintained in accordance with Section 13.3. [***101***:12.4.7.2; ***101***:13.4.7.2]

20.1.3.3 Temporary Water Supply. Where the special amusement building required to be sprinklered by 20.1.3.2 is movable or portable, the sprinkler water supply shall be permitted to be provided by an approved temporary means. [***101***:12.4.7.3; ***101***:13.4.7.3]

20.1.3.4 Smoke Detection. Where the nature of the special amusement building is such that it operates in reduced lighting levels, the building shall be protected throughout by an approved automatic smoke detection system in accordance with 13.7.1.4. [***101***:12.4.7.4; ***101***:13.4.7.4]

20.1.3.5 Alarm Initiation. Actuation of any smoke detection system device shall sound an alarm at a constantly attended location on the premises. [***101***:12.4.7.5, ***101***:13.4.7.5]

20.1.3.6 Illumination. Actuation of the automatic sprinkler system, or any other suppression system, or actuation of a smoke detection system having an approved verification or cross-zoning operation capability shall provide for the following:

(1) Increase in illumination in the means of egress to that required by Section 14.12
(2) Termination of any conflicting or confusing sounds and visuals [***101***:12.4.7.6; ***101***:13.4.7.6]

20.1.3.7 Exit Marking.

20.1.3.7.1 Exit marking shall be in accordance with Section 14.14. [***101***:12.4.7.7.1; ***101***:13.4.7.7.1]

20.1.3.7.2 Floor proximity exit signs shall be provided in accordance with 14.14.1.6. [***101***:12.4.7.7.2; ***101***:13.4.7.7.2]

20.1.3.7.3* In special amusement buildings where mazes, mirrors, or other designs are used to confound the egress path, approved directional exit marking that becomes apparent in an emergency shall be provided. [***101***:12.4.7.7.3; ***101***:13.4.7.7.3]

20.1.3.8 Interior Finish. Interior wall and ceiling finish materials complying with Section 10.2 of NFPA *101* shall be Class A throughout. [***101***:12.4.7.8; ***101***:13.4.7.8]

20.1.4 Operating Features.

20.1.4.1 Means of Egress Inspection.

20.1.4.1.1 The building owner or agent shall inspect the means of egress to ensure it is maintained free of obstructions, and correct any deficiencies found, prior to each opening of the building to the public. [***101***:12.7.1.1; ***101***:13.7.1.1]

20.1.4.1.2 The building owner or agent shall prepare and maintain records of the date and time of each inspection on approved forms, listing any deficiencies found and actions taken to correct them. [***101***:12.7.1.2; ***101***:13.7.1.2]

20.1.4.2 Special Provisions for Food Service Operations.

20.1.4.2.1 All devices in connection with the preparation of food shall be installed and operated to avoid hazard to the safety of occupants. [***101***:12.7.2.1; ***101***:13.7.2.1]

20.1.4.2.2 All devices in connection with the preparation of food shall be of an approved type and shall be installed in an approved manner. [***101***:12.7.2.2; ***101***:13.7.2.2]

20.1.4.2.3 Food preparation facilities shall be protected in accordance with 11.2.3 and shall not be required to have openings protected between food preparation areas and dining areas. [***101***:12.7.2.3; ***101***:13.7.2.3]

20.1.4.2.4 Portable cooking equipment that is not flue-connected shall be permitted only as follows:

(1) Equipment fueled by small heat sources that can be readily extinguished by water, such as candles or alcohol-burning equipment, including solid alcohol, shall be permitted to be used, provided that precautions satisfactory to the AHJ are taken to prevent ignition of any combustible materials.
(2) Candles shall be permitted to be used on tables used for food service where securely supported on substantial noncombustible bases located to avoid danger of ignition of combustible materials and only where approved by the AHJ.
(3) Candle flames shall be protected.
(4) "Flaming sword" or other equipment involving open flames and flamed dishes, such as cherries jubilee or crêpe suzette, shall be permitted to be used, provided that precautions subject to the approval of the AHJ are taken.
(5)*Listed and approved LP-Gas commercial food service appliances shall be permitted to be used where in accordance with Chapter 69. [***101***:12.7.2.4; ***101***:13.7.2.4]

20.1.4.2.4.1 Permits. Permits, where required, shall comply with Section 1.12.

20.1.4.3 Open Flame Devices and Pyrotechnics. No open flame devices or pyrotechnic devices shall be used in any assembly occupancy, unless otherwise permitted by the following:

(1) Pyrotechnic special effect devices shall be permitted to be used on stages before proximate audiences for ceremonial or religious purposes, as part of a demonstration in exhibits, or as part of a performance, provided that both of the following criteria are met:
   (a) Precautions satisfactory to the AHJ are taken to prevent ignition of any combustible material.
   (b) Use of the pyrotechnic device complies with Section 65.3.
(2) Flame effects before an audience shall be permitted in accordance with Section 65.4.
(3) Open flame devices shall be permitted to be used in the following situations, provided that precautions satisfactory to the AHJ are taken to prevent ignition of any combustible material or injury to occupants:
   (a)*For ceremonial or religious purposes
   (b) On stages and platforms where part of a performance
   (c) Where candles on tables are securely supported on substantial noncombustible bases and candle flame is protected

(4) The requirement of 20.1.4.3 shall not apply to heat-producing equipment complying with 11.2.2.
(5) The requirement of 20.1.4.3 shall not apply to food service operations in accordance with 20.1.4.2.
(6) Gas lights shall be permitted to be used, provided that precautions are taken, subject to the approval of the AHJ, to prevent ignition of any combustible materials. [***101***:12.7.3; ***101***:13.7.3]

20.1.4.3.1 Permits. Permits, where required, shall comply with Section 1.12.

20.1.4.4 Furnishings, Decorations, and Scenery.

20.1.4.4.1 Fabrics and films used for decorative purposes, all draperies and curtains, and similar furnishings shall be in accordance with the provisions of 20.1.4.4.2. [***101***:12.7.4.1; ***101***:13.7.4.1]

20.1.4.4.2* Where required by the applicable provisions of this *Code*, draperies, curtains, and other similar loosely hanging furnishings and decorations shall meet the flame propagation performance criteria contained in NFPA 701, *Standard Methods of Fire Tests for Flame Propagation of Textiles and Films.* [***101***:10.3.1]

20.1.4.4.3* Furnishings or decorations of an explosive or highly flammable character shall not be used. [***101***:10.3.5]

20.1.4.4.4 Fire-retardant coatings shall be maintained to retain the effectiveness of the treatment under service conditions encountered in actual use. [***101***:10.3.6]

20.1.4.4.5 The AHJ shall impose controls on the quantity and arrangement of combustible contents in assembly occupancies to provide an adequate level of safety to life from fire. [***101***:12.7.4.2; ***101***:13.7.4.2]

20.1.4.4.6* Exposed foamed plastic materials and unprotected materials containing foamed plastic used for decorative purposes or stage scenery shall have a heat release rate not exceeding 100 kW where tested in accordance with UL 1975, *Standard for Fire Tests for Foamed Plastics Used for Decorative Purposes.* [***101***:12.7.4.3; ***101***:13.7.4.3]

20.1.4.4.7 The requirement of 20.1.4.4.6 shall not apply to individual foamed plastic items and items containing foamed plastic where the foamed plastic does not exceed 1 lb (0.45 kg) in weight. [***101***:12.7.4.4; ***101***:13.7.4.4]

20.1.4.4.8 The provision of 10.3.2 of NFPA *101* for cigarette ignition resistance of newly introduced upholstered furniture and mattresses shall not apply to assembly occupancies. [***101***:12.7.4.5; ***101***:13.7.4.5]

20.1.4.5 Special Provisions for Exposition Facilities.

20.1.4.5.1 Permits. Permits, where required, shall comply with Section 1.12.

20.1.4.5.2 General. No display or exhibit shall be installed or operated to interfere in any way with access to any required exit or with the visibility of any required exit or required exit sign; nor shall any display block access to fire-fighting equipment. [***101***:12.7.5.1; ***101***:13.7.5.1]

20.1.4.5.3 Materials Not on Display. A storage room having an enclosure consisting of a smoke barrier having a fire resistance rating of 1 hour and protected by an automatic extinguishing system shall be provided for combustible materials not on display, including combustible packing crates used to ship exhibitors' supplies and products. [***101***:12.7.5.2; ***101***:13.7.5.2]

20.1.4.5.4 Exhibits.

20.1.4.5.4.1 Exhibits shall comply with 20.1.4.5.4.2 through 20.1.4.5.4.11. [***101***:12.7.5.3.1; ***101***:13.7.5.3.1]

20.1.4.5.4.2 The travel distance within the exhibit booth or exhibit enclosure to an exit access aisle shall not exceed 50 ft (15 m). [***101***:12.7.5.3.2; ***101***:13.7.5.3.2]

20.1.4.5.4.3 The upper deck of multilevel exhibits exceeding 300 ft^2 (28 m^2) shall have not less than two remote means of egress. [***101***:12.7.5.3.3; ***101***:13.7.5.3.3]

20.1.4.5.4.4 Exhibit booths shall be constructed of the following:

(1) Noncombustible or limited-combustible materials
(2) Wood exceeding ¼ in. (6.3 mm) nominal
(3) Wood that is pressure-treated, fire-retardant wood meeting the requirements of NFPA 703, *Standard for Fire Retardant–Treated Wood and Fire-Retardant Coatings for Building Materials*
(4) Flame-retardant materials complying with NFPA 701
(5) Textile wall coverings, such as carpeting and similar products used as wall or ceiling finishes, complying with the provisions of 10.2.2 and 10.2.4 of NFPA *101*
(6) Plastics limited to those that comply with 12.3.3, 13.3.3, and Section 10.2 of NFPA *101*
(7) Foamed plastics and materials containing foamed plastics having a heat release rate for any single fuel package that does not exceed 100 kW where tested in accordance with UL 1975, *Standard for Fire Tests for Foamed Plastics Used for Decorative Purposes*
(8) Cardboard, honeycombed paper, and other combustible materials having a heat release rate for any single fuel package that does not exceed 150 kW where tested in accordance with UL 1975 [***101***:12.7.5.3.4; ***101***:13.7.5.3.4]

20.1.4.5.4.5 Curtains, drapes, and decorations shall comply with 20.1.4.4.2. [***101***:12.7.5.3.5; ***101***:13.7.5.3.5]

20.1.4.5.4.6 Acoustical and decorative material including, but not limited to, cotton, hay, paper, straw, moss, split bamboo, and wood chips shall be flame-retardant treated to the satisfaction of the AHJ. [***101***:12.7.5.3.6; ***101***:13.7.5.3.6]

20.1.4.5.4.6.1 Materials that cannot be treated for flame retardancy shall not be used. [***101***:12.7.5.3.6.1; ***101***:13.7.5.3.6.1]

20.1.4.5.4.6.2 Foamed plastics, and materials containing foamed plastics and used as decorative objects such as, but not limited to, mannequins, murals, and signs, shall have a heat release rate for any single fuel package that does not exceed 150 kW where tested in accordance with UL 1975. [***101***:12.7.5.3.6.2; ***101***:13.7.5.3.6.2]

20.1.4.5.4.6.3 Where the aggregate area of acoustical and decorative materials is less than 10 percent of the individual floor or wall area, such materials shall be permitted to be used subject to the approval of the AHJ. [***101***:12.7.5.3.6.3; ***101***:13.7.5.3.6.3]

20.1.4.5.4.7 The following shall be protected by automatic extinguishing systems:

(1) Single-level exhibit booths exceeding 300 ft^2 (28 m^2) and covered with a ceiling
(2) Each level of multilevel exhibit booths, including the uppermost level where the uppermost level is covered with a ceiling [***101***:12.7.5.3.7; ***101***:13.7.5.3.7]

20.1.4.5.4.7.1 The requirements of 20.1.4.5.4.7 shall not apply where otherwise permitted by the following:

(1) Ceilings that are constructed of open grate design or listed dropout ceilings in accordance with NFPA 13, *Standard for the Installation of Sprinkler Systems*, shall not be considered ceilings within the context of 20.1.4.5.4.7.
(2) Vehicles, boats, and similar exhibited products having over 100 ft^2 (9.3 m^2) of roofed area shall be provided with smoke detectors acceptable to the AHJ.
(3)*The requirement of 20.1.4.5.4.7(2) shall not apply where fire protection of multilevel exhibit booths is consistent with the criteria developed through a life safety evaluation of the exhibition hall in accordance with 12.4.1 or 13.4.1 of NFPA *101*, subject to approval of the AHJ. [***101***:12.7.5.3.7.1; ***101***:13.7.5.3.7.1]

20.1.4.5.4.7.2 A single exhibit or group of exhibits with ceilings that do not require sprinklers shall be separated by a distance of not less than 10 ft (3050 mm) where the aggregate ceiling exceeds 300 ft^2 (28 m^2). [***101***:12.7.5.3.7.2; ***101***:13.7.5.3.7.2]

20.1.4.5.4.7.3 The water supply and piping for the sprinkler system shall be permitted to be of an approved temporary means that is provided by a domestic water supply, a standpipe system, or a sprinkler system. [***101***:12.7.5.3.7.3; ***101***:13.7.5.3.7.3]

20.1.4.5.4.8 Open flame devices within exhibit booths shall comply with 20.1.4.3. [***101***:12.7.5.3.8; ***101***:13.7.5.3.8]

20.1.4.5.4.9 Cooking and food-warming devices in exhibit booths shall comply with 20.1.4.2 and the following:

(1) Gas-fired devices shall comply with the following:
  (a) Natural gas-fired devices shall comply with 9.1.1 of NFPA *101*.
  (b) The requirement of 20.1.4.5.4.9(1)(a) shall not apply to compressed natural gas where permitted by the AHJ.
  (c) The use of LP-Gas cylinders shall be prohibited.
  (d) Nonrefillable LP-Gas cylinders shall be approved for use where permitted by the AHJ.
(2) The devices shall be isolated from the public by not less than 48 in. (1220 mm) or by a barrier between the devices and the public.
(3) Multi-well cooking equipment using combustible oils or solids shall comply with 11.2.3.
(4) Single-well cooking equipment using combustible oils or solids shall meet the following criteria:
  (a) They shall have lids available for immediate use.
  (b) They shall be limited to 2 ft^2 (0.2 m^2) of cooking surface.
  (c) They shall be placed on noncombustible surface materials.
  (d) They shall be separated from each other by a horizontal distance of not less than 24 in. (610 mm).
  (e) The requirement of 20.1.4.5.4.9(4)(d) shall not apply to multiple single-well cooking equipment where the aggregate cooking surface area does not exceed 2 ft^2 (0.2 m^2).
  (f) They shall be kept at a horizontal distance of not less than 24 in. (610 mm) from any combustible material.
(5) A portable fire extinguisher in accordance with Section 13.6 shall be provided within the booth for each device, or an approved automatic extinguishing system shall be provided. [***101***:12.7.5.3.9; ***101***:13.7.5.3.9]

20.1.4.5.4.10 Combustible materials within exhibit booths shall be limited to a one-day supply. Storage of combustible materials behind the booth shall be prohibited. *(See 20.1.4.4.5 and 20.1.4.5.3.)* [***101***:12.7.5.3.10; ***101***:13.7.5.3.10]

20.1.4.5.4.11 Plans for the exposition, in an acceptable form, shall be submitted to the AHJ for approval prior to setting up any exhibit. [***101***:12.7.5.3.11; ***101***:13.7.5.3.11]

20.1.4.5.4.11.1 The plan shall show all details of the proposed exposition. [***101***:12.7.5.3.11.1; ***101***:13.7.5.3.11.1]

20.1.4.5.4.11.2 No exposition shall occupy any exposition facility without approved plans. [***101***:12.7.5.3.11.2; ***101***:13.7.5.3.11.2]

20.1.4.5.4.12 Vehicles. Vehicles on display within an exposition facility shall comply with 20.1.4.5.4.12.1 through 20.1.4.5.4.12.5. [***101***:12.7.5.4; ***101***:13.7.5.4]

20.1.4.5.4.12.1 All fuel tank openings shall be locked and sealed in an approved manner to prevent the escape of vapors; fuel tanks shall not contain in excess of one-half their capacity or contain in excess of 10 gal (38 L) of fuel, whichever is less. [***101***:12.7.5.4.1; ***101***:13.7.5.4.1]

20.1.4.5.4.12.2 At least one battery cable shall be removed from the batteries used to start the vehicle engine, and the disconnected battery cable shall then be taped. [***101***:12.7.5.4.2; ***101***:13.7.5.4.2]

20.1.4.5.4.12.3 Batteries used to power auxiliary equipment shall be permitted to be kept in service. [***101***:12.7.5.4.3; ***101***:13.7.5.4.3]

20.1.4.5.4.12.4 Fueling or defueling of vehicles shall be prohibited. [***101***:12.7.5.4.4; ***101***:13.7.5.4.4]

20.1.4.5.4.12.5 Vehicles shall not be moved during exhibit hours. [***101***:12.7.5.4.5; ***101***:13.7.5.4.5]

20.1.4.5.4.13 Prohibited Materials.

20.1.4.5.4.13.1 The following items shall be prohibited within exhibit halls:

(1) Compressed flammable gases
(2) Flammable or combustible liquids
(3) Hazardous chemicals or materials
(4) Class II or greater lasers, blasting agents, and explosives [***101***:12.7.5.5.1; ***101***:13.7.5.5.1]

20.1.4.5.4.13.2 The AHJ shall be permitted to allow the limited use of any items specified in 20.1.4.5.4.13.1 under special circumstances. [***101***:12.7.5.5.2; ***101***:13.7.5.5.2]

20.1.4.6* Crowd Managers.

20.1.4.6.1 Assembly occupancies shall be provided with a minimum of one trained crowd manager or crowd manager supervisor. Where the occupant load exceeds 250, additional trained crowd managers or crowd manager supervisors shall be provided at a ratio of 1 crowd manager or crowd manager supervisor for every 250 occupants, unless otherwise permitted by the following:

(1) This requirement shall not apply to assembly occupancies used exclusively for religious worship with an occupant load not exceeding 2000.
(2) The ratio of trained crowd managers to occupants shall be permitted to be reduced where, in the opinion of the AHJ, the existence of an approved, supervised automatic sprinkler system and the nature of the event warrant. [***101***:12.7.6.1; ***101***:13.7.6.1]

20.1.4.6.2 The crowd manager shall receive approved training in crowd management techniques. [*101*:12.7.6.2; *101*:13.7.6.2]

20.1.4.7* Fire Detail. Fire details, if deemed necessary in any assembly occupancy, shall be determined by the AHJ. [**102**:9.5]

20.1.4.8* Drills.

20.1.4.8.1 The employees or attendants of assembly occupancies shall be trained and drilled in the duties they are to perform in case of fire, panic, or other emergency to effect orderly exiting. [*101*:12.7.7.1; *101*:13.7.7.1]

20.1.4.8.2 Employees or attendants of assembly occupancies shall be instructed in the proper use of portable fire extinguishers and other manual fire suppression equipment where provided. [*101*:12.7.7.2; *101*:13.7.7.2]

20.1.4.8.3* In the following assembly occupancies, an audible announcement shall be made, or a projected image shall be shown, prior to the start of each program that notifies occupants of the location of the exits to be used in case of a fire or other emergency:

(1) Theaters
(2) Motion picture theaters
(3) Auditoriums
(4) Other similar assembly occupancies with occupant loads exceeding 300 where there are noncontinuous programs [*101*:12.7.7.3; *101*:13.7.7.3]

20.1.4.8.4 The requirement of 20.1.4.8.3 shall not apply to assembly occupancies in schools where used for nonpublic events. [*101*:12.7.7.4; *101*:13.7.7.4]

20.1.4.9 Smoking.

20.1.4.9.1 Smoking in assembly occupancies shall be regulated by the AHJ. [*101*:12.7.8.1; *101*:13.7.8.1]

20.1.4.9.2 In rooms or areas where smoking is prohibited, plainly visible signs shall be posted that read as follows: [*101*:12.7.8.2; *101*:13.7.8.2]

NO SMOKING.

20.1.4.9.3 No person shall smoke in prohibited areas that are so posted, unless permitted by the AHJ under both of the following conditions:

(1) Smoking shall be permitted on a stage only where it is a necessary and rehearsed part of a performance.
(2) Smoking shall be permitted only where the smoker is a regular performing member of the cast. [*101*:12.7.8.3; *101*:13.7.8.3]

20.1.4.9.4 Where smoking is permitted, suitable ashtrays or receptacles shall be provided in convenient locations. [*101*:12.7.8.4; *101*:13.7.8.4]

20.1.4.10 Seating.

20.1.4.10.1 Secured Seating.

20.1.4.10.1.1 Seats in assembly occupancies accommodating more than 200 persons shall be securely fastened to the floor, except where fastened together in groups of not less than three and not exceeding seven and as permitted by 20.1.4.10.2. [*101*:12.7.9.1.1; *101*:13.7.9.1.1]

20.1.4.10.1.2 All seats in balconies and galleries shall be securely fastened to the floor, except in places of religious worship. [*101*:12.7.9.1.2; *101*:13.7.9.1.2]

20.1.4.10.2 Unsecured Seating.

20.1.4.10.2.1 Seats not secured to the floor shall be permitted in restaurants, night clubs, and other occupancies where fastening seats to the floor might be impracticable. [*101*:12.7.9.2.1; *101*:13.7.9.2.1]

20.1.4.10.2.2 Unsecured seats shall be permitted, provided that, in the area used for seating, excluding such areas as dance floors and stages, there is not more than one seat for each 15 ft^2 (1.4 m^2) of net floor area, and adequate aisles to reach exits are maintained at all times. [*101*:12.7.9.2.2; *101*:13.7.9.2.2]

20.1.4.10.2.3 Seating diagrams shall be submitted for approval by the AHJ to permit an increase in occupant load per 14.8.1.3. [*101*:12.7.9.2.3; *101*:13.7.9.2.3]

20.1.4.10.3 Occupant Load Posting.

20.1.4.10.3.1 Every room constituting an assembly occupancy and not having fixed seats shall have the occupant load of the room posted in a conspicuous place near the main exit from the room. [*101*:12.7.9.3.1; *101*:13.7.9.3.1]

20.1.4.10.3.2 Approved signs shall be maintained in a legible manner by the owner or authorized agent. [*101*:12.7.9.3.2; *101*:13.7.9.3.2]

20.1.4.10.3.3 Signs shall be durable and shall indicate the number of occupants permitted for each room use. [*101*:12.7.9.3.3; *101*:13.7.9.3.3]

20.1.4.11 Clothing. Clothing and personal effects shall not be stored in corridors, unless otherwise permitted by the following:

(1) For new occupancies, this requirement shall not apply to corridors protected by an approved, supervised automatic sprinkler system in accordance with Section 13.3. [*101*:12.7.12]
(2) For existing occupancies, this requirement shall not apply to corridors protected by an approved, automatic sprinkler system in accordance with Section 13.3. [*101*:13.7.12(1)]
(3) This requirement shall not apply to corridor areas protected by a smoke detection system in accordance with 13.7.1.4.
(4) This requirement shall not apply to storage in metal lockers, provided that the required egress width is maintained. [*101*:12.7.12]

20.1.4.12 Projection Rooms.

20.1.4.12.1 Film or video projectors or spotlights utilizing light sources that produce particulate matter, or toxic gases or light sources that produce hazardous radiation, without protective shielding shall be located within a projection room complying with 12.3.2.1.2 of NFPA *101*. [*101*:12.4.6.3; *101*:13.4.6.3]

20.1.4.12.2 Every projection room shall be of permanent construction consistent with the construction requirements for the type of building in which the projection room is located and shall comply with the following:

(1) Openings shall not be required to be protected.
(2) The room shall have a floor area of not less than 80 ft^2 (7.4 m^2) for a single machine and not less than 40 ft^2 (3.7 m^2) for each additional machine.
(3) Each motion picture projector, floodlight, spotlight, or similar piece of equipment shall have a clear working space of not less than 30 in. (760 mm) on each side and at its rear, but only one such space shall be required between adjacent projectors. [*101*:12.4.6.4; *101*:13.4.6.4]

20.2 Educational Occupancies.

20.2.1 Application. New and existing educational occupancies shall comply with Section 20.2 and NFPA *101*.

20.2.2 Flexible Plan and Open Plan Buildings.

20.2.2.1 Flexible plan and open plan buildings shall comply with the requirements of 20.2.2 as modified by 20.2.2.2 through 20.2.2.5. [***101***:14.4.3.1; ***101***:15.4.3.1]

20.2.2.2 Each room occupied by more than 300 persons shall have two or more means of egress entering into separate atmospheres. [***101***:14.4.3.2; ***101***:15.4.3.2]

20.2.2.3 Where three or more means of egress are required, the number of means of egress permitted to enter into the same atmosphere shall not exceed two. [***101***:14.4.3.3; ***101***:15.4.3.3]

20.2.2.4 Flexible plan buildings shall be permitted to have walls and partitions rearranged periodically only if revised plans or diagrams have been approved by the AHJ. [***101***:14.4.3.4; ***101***:15.4.3.4]

20.2.2.5 Flexible plan buildings shall be evaluated while all folding walls are extended and in use as well as when they are in the retracted position. [***101***:14.4.3.5; ***101***:15.4.3.5]

20.2.3 Operating Features.

20.2.3.1 Emergency Plan. Emergency plans shall be provided in accordance with Section 4.8 of NFPA *101*. [***101***:14.7.1]

20.2.3.2 Emergency Egress Drills.

20.2.3.2.1* Emergency egress drills shall be conducted in accordance with Section 10.6 and the applicable provisions of 20.2.3.2.2. [***101***:14.7.2.1; ***101***:15.7.2.1]

20.2.3.2.2 Emergency egress drills shall be conducted as follows:

(1) Not less than one emergency egress drill shall be conducted every month the facility is in session, unless both of the following criteria are met:
   (a) In climates where the weather is severe, the monthly emergency egress drills shall be permitted to be deferred.
   (b) The required number of emergency egress drills shall be conducted, and not less than four shall be conducted before the drills are deferred.
(2) All occupants of the building shall participate in the drill.
(3) One additional emergency egress drill, other than for educational occupancies that are open on a year-round basis, shall be required within the first 30 days of operation. [***101***:14.7.2.2; ***101***:15.7.2.2]

20.2.3.2.3 All emergency drill alarms shall be sounded on the fire alarm system. [***101***:14.7.2.3; ***101***:15.7.2.3]

20.2.3.3 Inspection.

20.2.3.3.1* It shall be the duty of principals, teachers, or staff to inspect all exit facilities daily to ensure that all stairways, doors, and other exits are in proper condition. [***101***:14.7.3.1; ***101***:15.7.3.1]

20.2.3.3.2 Open plan buildings shall require extra surveillance to ensure that exit paths are maintained clear of obstruction and are obvious. [***101***:14.7.3.2; ***101***:15.7.3.2]

20.2.3.4 Furnishings and Decorations.

20.2.3.4.1 Draperies, curtains, and other similar furnishings and decorations in educational occupancies shall be in accordance with the provisions of 20.2.3.4.2. [***101***:14.7.4.1; ***101***:15.7.4.1]

20.2.3.4.2* Where required by the applicable provisions of this *Code*, draperies, curtains, and other similar loosely hanging furnishings and decorations shall meet the flame propagation performance criteria contained in NFPA 701, *Standard Methods of Fire Tests for Flame Propagation of Textiles and Films*. [***101***:10.3.1]

20.2.3.4.3* Furnishings or decorations of an explosive or highly flammable character shall not be used. [***101***:10.3.5]

20.2.3.4.4 Fire-retardant coatings shall be maintained to retain the effectiveness of the treatment under service conditions encountered in actual use. [***101***:10.3.6]

20.2.3.4.5 Clothing and personal effects shall not be stored in corridors, unless otherwise permitted by the following:

(1) This requirement shall not apply to corridors protected by an automatic sprinkler system in accordance with Section 13.3.
(2) This requirement shall not apply to corridor areas protected by a smoke detection system in accordance with 13.7.1.4.
(3) This requirement shall not apply to storage in metal lockers, provided that the required egress width is maintained. [***101***:14.7.4.2; ***101***:15.7.4.2]

20.2.3.4.6 Artwork and teaching materials shall be permitted to be attached directly to the walls in accordance with the following:

(1) For new occupancies, the artwork and teaching materials shall not exceed 20 percent of the wall area in a building that is not protected throughout by an approved, supervised automatic sprinkler system in accordance with Section 13.3. [***101***:14.7.4.3]
(2) For existing occupancies, the artwork and teaching materials shall not exceed 20 percent of the wall area in a building that is not protected throughout by an approved automatic sprinkler system in accordance with Section 13.3. [***101***:15.7.4.3(1)]
(3) The artwork and teaching materials shall not exceed 50 percent of the wall area in a building that is protected throughout by an approved, supervised automatic sprinkler system in accordance with Section 13.3. [***101***:14.7.4.3]

20.2.3.4.7 The provision of 10.3.2 of NFPA *101* for cigarette ignition resistance of newly introduced upholstered furniture and mattresses shall not apply to educational occupancies protected throughout by an approved, supervised automatic sprinkler system in accordance with Section 13.3. [***101***:14.7.4.4; ***101***:15.7.4.5]

20.2.3.5 Unvented Fuel-Fired Heating Equipment. Unvented fuel-fired heating equipment, other than gas space heaters in compliance with NFPA 54/ANSI Z223.1, *National Fuel Gas Code*, shall be prohibited. [***101***:14.5.2.2; ***101***:15.5.2.2]

20.3 Day-Care Occupancies.

20.3.1 Application. New and existing day-care occupancies shall comply with Section 20.3 and NFPA *101*.

20.3.1.1 In new day-care occupancies, where a facility houses more than one age group or self-preservation capability, the strictest requirements applicable to any group present shall apply throughout the day-care occupancy or building, as appropriate to a given area, unless the area housing such a group is maintained as a separate fire area. [***101***:16.1.1.4]

20.3.1.2 In existing day-care occupancies, where a facility houses clients of more than one self-preservation capability, the strictest requirements applicable to any group present shall apply throughout the day-care occupancy or building, as appropriate to a given area, unless the area housing such a group is maintained as a separate fire area. [***101***:17.1.1.4]

20.3.1.3 Places of religious worship shall not be required to meet the provisions of Section 20.3 where providing day care while services are being held in the building. [***101***:16.1.1.5; ***101***:17.1.1.5]

20.3.1.4 General. Occupancies that include part-day preschools, kindergartens, and other schools whose purpose is primarily educational, even though the children who attend such schools are of preschool age, shall comply with the provisions of Chapter 14 of NFPA *101*. [***101***:16.1.4.1; ***101***:17.1.4.1]

20.3.1.5 Adult Day-Care Occupancies.

20.3.1.5.1 Adult day-care occupancies shall include any building or portion thereof used for less than 24 hours per day to house more than three adults requiring care, maintenance, and supervision by other than their relative(s). [***101***:16.1.4.2.1; ***101***:17.1.4.2.1]

20.3.1.5.2 Clients in adult day-care occupancies shall be ambulatory or semiambulatory and shall not be bedridden. [***101***:16.1.4.2.2; ***101***:17.1.4.2.2]

20.3.1.5.3 Clients in adult day-care occupancies shall not exhibit behavior that is harmful to themselves or to others. [***101***:16.1.4.2.3; ***101***:17.1.4.2.3]

20.3.2 General Requirements.

20.3.2.1 Unvented fuel-fired heating equipment, other than gas space heaters in compliance with NFPA 54/ANSI Z223.1, *National Fuel Gas Code*, shall be prohibited. [***101***:16.5.2.2; ***101***:17.5.2.2]

20.3.2.2* Closet Doors. Every closet door latch shall be such that clients can open the door from inside the closet. [***101***:16.2.2.2.4; ***101***:17.2.2.2.4]

20.3.2.3 Bathroom Doors. Every bathroom door lock shall be designed to allow opening of the locked door from the outside by an opening device that shall be readily accessible to the staff. [***101***:16.2.2.2.5; ***101***:17.2.2.2.5]

20.3.2.4 Flexible Plan and Open Plan Buildings.

20.3.2.4.1 In new day-care occupancies, flexible plan and open plan buildings shall comply with the requirements of 20.3.2.4 as modified by 20.3.2.4.3 through 20.3.2.4.6. [***101***:16.4.3.1]

20.3.2.4.2 In existing day-care occupancies, flexible plan and open plan buildings shall comply with the requirements of 20.3.2.4 as modified by 20.3.2.4.3 and 20.3.2.4.4. [***101***:17.4.3.1]

20.3.2.4.3 Flexible plan buildings shall be permitted to have walls and partitions rearranged periodically only if revised plans or diagrams have been approved by the AHJ. [***101***:16.4.3.2; ***101***:17.4.3.2]

20.3.2.4.4 Flexible plan buildings shall be evaluated while all folding walls are extended and in use as well as when they are in the retracted position. [***101***:16.4.3.3; ***101***:17.4.3.3]

20.3.2.4.5 Each room occupied by more than 300 persons shall have two or more means of egress entering into separate atmospheres. [***101***:16.4.3.4]

20.3.2.4.6 Where three or more means of egress are required from a single room, the number of means of egress permitted to enter into a common atmosphere shall not exceed two. [***101***:16.4.3.5]

20.3.3 Day-Care Homes.

20.3.3.1 Classification.

20.3.3.1.1 In new day-care homes, the requirements of Section 16.6 of NFPA *101* shall apply to day-care homes in which more than 3, but not more than 12, clients receive care, maintenance, and supervision by other than their relative(s) or legal guardian(s) for less than 24 hours per day, generally within a dwelling unit. *(See also 16.6.1.4 of NFPA 101.)* [***101***:16.6.1.1.2]

20.3.3.1.2* In existing day-care homes, the requirements of Section 17.6 of NFPA *101* shall apply to existing day-care homes in which more than 3, but not more than 12, clients receive care, maintenance, and supervision by other than their relative(s) or legal guardian(s) for less than 24 hours per day, generally within a dwelling unit. An existing day-care home shall be permitted the option of meeting the requirements of Section 16.6 of NFPA *101* in lieu of Section 17.6 of NFPA *101*. Any existing day-care home that meets the requirements of Chapter 16 of NFPA *101* shall be judged as meeting the requirements of this chapter. *(See also 17.6.1.4 of NFPA 101.)* [***101***:17.6.1.1.2]

20.3.3.1.3 In new day-care homes, where a facility houses more than one age group or one self-preservation capability, the strictest requirements applicable to any group present shall apply throughout the day-care home or building, as appropriate to a given area, unless the area housing such a group is maintained as a separate fire area. [***101***:16.6.1.1.3]

20.3.3.1.4 In existing day-care homes, where a facility houses clients of more than one self-preservation capability, the strictest requirements applicable to any group present shall apply throughout the day-care home or building, as appropriate to a given area, unless the area housing such a group is maintained as a separate fire area. [***101***:17.6.1.1.3]

20.3.3.1.5 Facilities that supervise clients on a temporary basis with a parent or guardian in close proximity shall not be required to meet the provisions of Section 16.6 or Section 17.6 of NFPA *101*. [***101***:16.6.1.1.4; ***101***:17.6.1.1.4]

20.3.3.1.6 Places of religious worship shall not be required to meet the provisions of Section 16.6 or Section 17.6 of NFPA *101* where operating a nursery (day-care home) while services are being held in the building. [***101***:16.6.1.1.5; ***101***:17.6.1.1.5]

20.3.3.2 Operating Features.

20.3.3.2.1* Emergency Plans. Emergency plans shall be provided in accordance with Section 4.8 of NFPA *101*. [***101***:16.7.1; ***101***:17.7.1]

20.3.3.2.2 Emergency Egress and Relocation Drills.

20.3.3.2.2.1* Emergency egress and relocation drills shall be conducted in accordance with Section 10.6 and the applicable provisions of 20.3.3.2.2.2. [***101***:16.7.2.1; ***101***:17.7.2.1]

20.3.3.2.2.2 Emergency egress and relocation drills shall be conducted as follows:

(1) Not less than one emergency egress and relocation drill shall be conducted every month the facility is in session, unless both of the following criteria are met:
   (a) In climates where the weather is severe, the monthly emergency egress and relocation drills shall be permitted to be deferred.
   (b) The required number of emergency egress and relocation drills shall be conducted, and not less than four shall be conducted before the drills are deferred.
(2) All occupants of the building shall participate in the drill.
(3) One additional emergency egress and relocation drill, other than for day-care occupancies that are open on a year-round basis, shall be required within the first 30 days of operation. [*101*:16.7.2.2; *101*:17.7.2.2]

20.3.3.2.3 Inspections.

20.3.3.2.3.1 Fire prevention inspections shall be conducted monthly by a trained senior member of the staff, after which a copy of the latest inspection report shall be posted in a conspicuous place in the day-care facility. [*101*:16.7.3.1; *101*:17.7.3.1]

20.3.3.2.3.2* It shall be the duty of site administrators and staff members to inspect all exit facilities daily to ensure that all stairways, doors, and other exits are in proper condition. [*101*:16.7.3.2; *101*:17.7.3.2]

20.3.3.2.3.3 Open plan buildings shall require extra surveillance to ensure that exit paths are maintained clear of obstruction and are obvious. [*101*:16.7.3.3; *101*:17.7.3.3]

20.3.3.2.3.4 Furnishings and Decorations.

20.3.3.2.3.4.1 Draperies, curtains, and other similar furnishings and decorations in day-care occupancies shall be in accordance with the provisions of 20.3.3.2.3.4.2. [*101*:16.7.4.1; *101*:17.7.4.1]

20.3.3.2.3.4.2* Where required by the applicable provisions of this *Code*, draperies, curtains, and other similar loosely hanging furnishings and decorations shall meet the flame propagation performance criteria contained in NFPA 701. [*101*:10.3.1]

20.3.3.2.3.4.3 Clothing and personal effects shall not be stored in corridors, unless otherwise permitted by the following:

(1) This requirement shall not apply to corridors protected by an automatic sprinkler system in accordance with Section 13.3.
(2) This requirement shall not apply to corridor areas protected by a smoke detection system in accordance with Section 13.7.
(3) This requirement shall not apply to storage in metal lockers, provided that the required egress width is maintained. [*101*:16.7.4.2; *101*:17.7.4.2]

20.3.3.2.3.4.4 Artwork and teaching materials shall be permitted to be attached directly to the walls in accordance with the following:

(1) In new day-care homes, the artwork and teaching materials shall not exceed 20 percent of the wall area in a building that is not protected throughout by an approved, supervised automatic sprinkler system in accordance with Section 13.3. [*101*:16.7.4.3]
(2) In existing day-care homes, the artwork and teaching materials shall not exceed 20 percent of the wall area in a building that is not protected throughout by an approved automatic sprinkler system in accordance with Section 13.3. [*101*:17.7.4.3(1)]
(3) The artwork and teaching materials shall not exceed 50 percent of the wall area in a building that is protected throughout by an approved, supervised automatic sprinkler system in accordance with Section 13.3. [*101*:16.7.4.3]

20.3.3.2.3.4.5* Day-Care Staff. Adequate adult staff shall be on duty, alert, awake, and in the facility at all times where clients are present. [*101*:16.7.5; *101*:17.7.5]

20.4 Health Care Occupancies.

20.4.1 Application. New and existing health care occupancies shall comply with Section 20.4, NFPA *101*, and NFPA 99.

20.4.2* Operating Features.

20.4.2.1 Evacuation and Relocation Plan and Fire Drills.

20.4.2.1.1 The administration of every health care occupancy shall have, in effect and available to all supervisory personnel, written copies of a plan for the protection of all persons in the event of fire, for their evacuation to areas of refuge, and for their evacuation from the building when necessary. [*101*:18.7.1.1; *101*:19.7.1.1]

20.4.2.1.2 All employees shall be periodically instructed and kept informed with respect to their duties under the plan required by 20.4.2.1.1. [*101*:18.7.1.2; *101*:19.7.1.2]

20.4.2.1.3 A copy of the plan required by 20.4.2.1.1 shall be readily available at all times in the telephone operator's location or at the security center. [*101*:18.7.1.3; *101*:19.7.1.3]

20.4.2.1.4 The provisions of Section 10.6 and 20.4.2.1.2 through 20.4.2.2.3 shall apply.

20.4.2.1.5* Fire drills in health care occupancies shall include the transmission of a fire alarm signal and simulation of emergency fire conditions. [*101*:18.7.1.4; *101*:19.7.1.4]

20.4.2.1.6 Infirm or bedridden patients shall not be required to be moved during drills to safe areas or to the exterior of the building. [*101*:18.7.1.5; *101*:19.7.1.5]

20.4.2.1.7 Drills shall be conducted quarterly on each shift to familiarize facility personnel (nurses, interns, maintenance engineers, and administrative staff) with the signals and emergency action required under varied conditions. [*101*:18.7.1.6; *101*:19.7.1.6]

20.4.2.1.8 When drills are conducted between 9:00 p.m. (2100 hours) and 6:00 a.m. (0600 hours), a coded announcement shall be permitted to be used instead of audible alarms. [*101*:18.7.1.7; *101*:19.7.1.7]

20.4.2.1.9 Employees of health care occupancies shall be instructed in life safety procedures and devices. [*101*:18.7.1.8; *101*:19.7.1.8]

20.4.2.2 Procedure in Case of Fire.

20.4.2.2.1* Protection of Patients.

20.4.2.2.1.1 For health care occupancies, the proper protection of patients shall require the prompt and effective response of health care personnel. [*101*:18.7.2.1.1; *101*:19.7.2.1.1]

20.4.2.2.1.2 The basic response required of staff shall include the following:

(1) Removal of all occupants directly involved with the fire emergency
(2) Transmission of an appropriate fire alarm signal to warn other building occupants and summon staff
(3) Confinement of the effects of the fire by closing doors to isolate the fire area
(4) Relocation of patients as detailed in the health care occupancy's fire safety plan [*101*:18.7.2.1.2; *101*:19.7.2.1.2]

20.4.2.2.2 Fire Safety Plan. A written health care occupancy fire safety plan shall provide for the following:

(1) Use of alarms
(2) Transmission of alarms to fire department
(3) Emergency phone call to fire department
(4) Response to alarms
(5) Isolation of fire
(6) Evacuation of immediate area
(7) Evacuation of smoke compartment
(8) Preparation of floors and building for evacuation
(9) Extinguishment of fire [*101*:18.7.2.2; *101*:19.7.2.2]

20.4.2.2.3 Staff Response.

20.4.2.2.3.1 All health care occupancy personnel shall be instructed in the use of and response to fire alarms. [*101*:18.7.2.3.1; *101*:19.7.2.3.1]

20.4.2.2.3.2 All health care occupancy personnel shall be instructed in the use of the code phrase to ensure transmission of an alarm under the following conditions:

(1) When the individual who discovers a fire must immediately go to the aid of an endangered person
(2) During a malfunction of the building fire alarm system [*101*:18.7.2.3.2; *101*:19.7.2.3.2]

20.4.2.2.3.3 Personnel hearing the code announced shall first activate the building fire alarm using the nearest manual fire alarm box and then shall execute immediately their duties as outlined in the fire safety plan. [*101*:18.7.2.3.3; *101*:19.7.2.3.3]

20.4.2.3 Maintenance of Exits.

20.4.2.3.1 Proper maintenance shall be provided to ensure the dependability of the method of evacuation selected. [*101*:18.7.3.1; *101*:19.7.3.1]

20.4.2.3.2 Health care occupancies that find it necessary to lock exits shall, at all times, maintain an adequate staff qualified to release locks and direct occupants from the immediate danger area to a place of safety in case of fire or other emergency. [*101*:18.7.3.2; *101*:19.7.3.2]

20.4.2.4* Smoking. Smoking regulations shall be adopted and shall include not less than the following provisions:

(1) Smoking shall be prohibited in any room, ward, or compartment where flammable liquids, combustible gases, or oxygen is used or stored and in any other hazardous location, and such areas shall be posted with signs that read NO SMOKING or shall be posted with the international symbol for no smoking.
(2) In health care occupancies where smoking is prohibited and signs are prominently placed at all major entrances, secondary signs with language that prohibits smoking shall not be required.
(3) Smoking by patients classified as not responsible shall be prohibited.
(4) The requirement of 20.4.2.4(3) shall not apply where the patient is under direct supervision.
(5) Ashtrays of noncombustible material and safe design shall be provided in all areas where smoking is permitted.
(6) Metal containers with self-closing cover devices into which ashtrays can be emptied shall be readily available to all areas where smoking is permitted. [*101*:18.7.4; *101*:19.7.4]

20.4.2.5 Furnishings, Bedding, and Decorations.

20.4.2.5.1* Draperies, curtains, and other loosely hanging fabrics and films serving as furnishings or decorations in health care occupancies shall be in accordance with the provisions of 20.4.2.5.2 *(see 18.3.5.9 or 19.3.5.9 of NFPA 101)*, and the following also shall apply:

(1) Such curtains shall include cubicle curtains.
(2) Such curtains shall not include curtains at showers. [*101*:18.7.5.1]
(3) In new occupancies, such draperies and curtains shall not include draperies and curtains at windows in patient sleeping rooms in sprinklered smoke compartments.
(4) In existing occupancies, such draperies and curtains shall not include draperies and curtains at windows in patient sleeping rooms in sprinklered smoke compartments. [*101*:19.7.5.1(3)]

20.4.2.5.2* Where required by the applicable provisions of this *Code*, draperies, curtains, and other similar loosely hanging furnishings and decorations shall meet the flame propagation performance criteria contained in NFPA 701. [*101*:10.3.1]

20.4.2.5.3 Newly introduced upholstered furniture within health care occupancies shall comply with one of the following provisions:

(1) The furniture shall meet the criteria specified in 10.3.2.1 and 10.3.3 of NFPA *101*.
(2) The furniture shall be in a building protected throughout by an approved, supervised automatic sprinkler system in accordance with NFPA 13. [*101*:18.7.5.2; *101*:19.7.5.2]

20.4.2.5.4 The requirements of 19.7.5.2, 10.3.2.1, and 10.3.3 of NFPA *101* shall not apply to upholstered furniture belonging to the patient in sleeping rooms of nursing homes where the following criteria are met:

(1) A smoke detector shall be installed where the patient sleeping room is not protected by automatic sprinklers.
(2) Battery-powered single-station smoke detectors shall be permitted. [*101*:19.7.5.3]

20.4.2.5.5 Newly introduced mattresses within health care occupancies shall comply with one of the following provisions:

(1) The mattresses shall meet the criteria specified in 10.3.2.2 and 10.3.4 of NFPA *101*.
(2) The mattresses shall be in a building protected throughout by an approved, supervised automatic sprinkler system in accordance with NFPA 13. [*101*:18.7.5.4; *101*:19.7.5.4]

20.4.2.5.6 The requirements of 19.7.5.4, 10.3.2.2, and 10.3.4 of NFPA *101* shall not apply to mattresses belonging to the patient in sleeping rooms of nursing homes where the following criteria are met:

(1) A smoke detector shall be installed where the patient sleeping room is not protected by automatic sprinklers.
(2) Battery-powered single-station smoke detectors shall be permitted. [*101*:19.7.5.5]

20.4.2.5.7 Combustible decorations shall be prohibited in any health care occupancy, unless one of the following criteria is met:

(1) They are flame-retardant.
(2)*They are decorations, such as photographs and paintings, in such limited quantities that a hazard of fire development or spread is not present. [*101*:18.7.5.6; *101*:19.7.5.6]

20.4.2.5.8 Soiled linen or trash collection receptacles shall not exceed 32 gal (121 L) in capacity and shall meet the following requirements:

(1) The average density of container capacity in a room or space shall not exceed 0.5 gal/ft^2 (20.4 L/m^2).
(2) A capacity of 32 gal (121 L) shall not be exceeded within any 64 ft^2 (6 m^2) area.
(3) Mobile soiled linen or trash collection receptacles with capacities greater than 32 gal (121 L) shall be located in a room protected as a hazardous area when not attended.
(4) Container size and density shall not be limited in hazardous areas. [*101*:18.7.5.7; *101*:19.7.5.7]

20.4.2.6 Portable Space-Heating Devices. Portable space-heating devices shall be prohibited in all health care occupancies, unless both of the following criteria are met:

(1) Such devices are permitted to be used only in nonsleeping staff and employee areas.
(2) The heating elements of such devices do not exceed 212°F (100°C). [*101*:18.7.8; *101*:19.7.8]

20.5 Residential Board and Care Occupancies.

20.5.1 Application. New and existing residential board and care occupancies shall comply with Section 20.5 and NFPA *101*.

20.5.2 Operating Features.

20.5.2.1 Emergency Plan.

20.5.2.1.1 The administration of every residential board and care facility shall have, in effect and available to all supervisory personnel, written copies of a plan for protecting all persons in the event of fire, for keeping persons in place, for evacuating persons to areas of refuge, and for evacuating persons from the building when necessary. [*101*:32.7.1.1; *101*:33.7.1.1]

20.5.2.1.2 The emergency plan shall include special staff response, including the fire protection procedures needed to ensure the safety of any resident, and shall be amended or revised whenever any resident with unusual needs is admitted to the home. [*101*:32.7.1.2; *101*:33.7.1.2]

20.5.2.1.3 All employees shall be periodically instructed and kept informed with respect to their duties and responsibilities under the plan, and such instruction shall be reviewed by the staff not less than every 2 months. [*101*:32.7.1.3; *101*:33.7.1.3]

20.5.2.1.4 The requirements of 19.7.5.2, 10.3.2.1, and 10.3.3 of NFPA *101* shall not apply to upholstered furniture belonging to the patient in sleeping rooms of nursing homes where the following criteria are met:

(1) A smoke detector shall be installed where the patient sleeping room is not protected by automatic sprinklers.
(2) Battery-powered single-station smoke detectors shall be permitted. [*101*:19.7.5.3]

20.5.2.2 Resident Training.

20.5.2.2.1 All residents participating in the emergency plan shall be trained in the proper actions to be taken in the event of fire. [*101*:32.7.2.1; *101*:33.7.2.1]

20.5.2.2.2 The training required by 20.5.2.2.1 shall include actions to be taken if the primary escape route is blocked. [*101*:32.7.2.2; *101*:33.7.2.2]

20.5.2.2.3 If a resident is given rehabilitation or habilitation training, training in fire prevention and the actions to be taken in the event of a fire shall be a part of the training program. [*101*:32.7.2.3; *101*:33.7.2.3]

20.5.2.2.4 Residents shall be trained to assist each other in case of fire to the extent that their physical and mental abilities permit them to do so without additional personal risk. [*101*:32.7.2.4; *101*:33.7.2.4]

20.5.2.3 Emergency Egress and Relocation Drills. Emergency egress and relocation drills shall be conducted in accordance with 20.5.2.3.1 through 20.5.2.3.6. [*101*:32.7.3; *101*:33.7.3]

20.5.2.3.1 Emergency egress and relocation drills shall be conducted not less than six times per year on a bimonthly basis, with not less than two drills conducted during the night when residents are sleeping, as modified by 20.5.2.3.5 and 20.5.2.3.6. [*101*:32.7.3.1; *101*:33.7.3.1]

20.5.2.3.2 The emergency drills shall be permitted to be announced in advance to the residents. [*101*:32.7.3.2; *101*:33.7.3.2]

20.5.2.3.3 The drills shall involve the actual evacuation of all residents to an assembly point, as specified in the emergency plan, and shall provide residents with experience in egressing through all exits and means of escape required by this *Code*. [*101*:32.7.3.3; *101*:33.7.3.3]

20.5.2.3.4 Exits and means of escape not used in any drill shall not be credited in meeting the requirements of this *Code* for board and care facilities. [*101*:32.7.3.4; *101*:33.7.3.4]

20.5.2.3.5 Actual exiting from windows shall not be required to comply with 20.5.2.3; opening the window and signaling for help shall be an acceptable alternative. [*101*:32.7.3.5; *101*:33.7.3.5]

20.5.2.3.6 If the board and care facility has an evacuation capability classification of impractical, those residents who cannot meaningfully assist in their own evacuation or who have special health problems shall not be required to actively participate in the drill. Subsection 20.4.2 shall apply in such instances. [*101*:32.7.3.6; *101*:33.7.3.6]

20.5.2.4 Smoking.

20.5.2.4.1* Smoking regulations shall be adopted by the administration of board and care occupancies. [*101*:32.7.4.1; *101*:33.7.4.1]

20.5.2.4.2 Where smoking is permitted, noncombustible safety-type ashtrays or receptacles shall be provided in convenient locations. [*101*:32.7.4.2; *101*:33.7.4.2]

20.5.2.5* Furnishings, Bedding, and Decorations.

20.5.2.5.1 New draperies, curtains, and other similar loosely hanging furnishings and decorations in board and care facilities shall be in accordance with the provisions of 20.1.4.4.2. [*101*:32.7.5.1; *101*:33.7.5.1]

20.5.2.5.2* New upholstered furniture within board and care facilities shall comply with 20.5.2.5.2.1 or 20.5.2.5.2.2. [*101*:32.7.5.2; *101*:33.7.5.2]

20.5.2.5.2.1 New upholstered furniture shall be tested in accordance with the provisions of 10.3.2.1(1) and 10.3.3 of NFPA *101*. [*101*:32.7.5.2.1; *101*:33.7.5.2.1]

20.5.2.5.2.2 Upholstered furniture belonging to residents in sleeping rooms shall not be required to be tested, provided that a smoke alarm is installed in such rooms; battery-powered single-station smoke alarms shall be permitted in such rooms. [*101*:32.7.5.2.2; *101*:33.7.5.2.2]

20.5.2.5.2.3* New mattresses within board and care facilities shall comply with 20.5.2.5.2.3.1 or 20.5.2.5.2.3.2. [*101*:32.7.5.3; *101*:33.7.5.3]

20.5.2.5.2.3.1 New upholstered furniture shall be tested in accordance with the provisions of 10.3.2.2 and 10.3.4 of NFPA *101*. [*101*:32.7.5.3.1; *101*:33.7.5.3.1]

20.5.2.5.2.3.2 Mattresses belonging to residents in sleeping rooms shall not be required to be tested, provided that a smoke alarm is installed in such rooms; battery-powered single-station smoke alarms shall be permitted in such rooms. [*101*:32.7.5.3.2; *101*:33.7.5.3.2]

20.5.2.5.3 No stove or combustion heater shall be located to block escape in case of fire caused by the malfunction of the stove or heater. [*101*:32.2.5.2.2; *101*:33.2.5.2.2]

20.5.2.5.4 Unvented fuel-fired heaters shall not be used in any residential board and care facility. [*101*:32.2.5.2.3; *101*:33.2.5.2.3]

20.6 Ambulatory Health Care Centers.

20.6.1 Application. New and existing ambulatory health care centers shall comply with Section 20.6 and NFPA *101*.

20.6.2* Operating Features.

20.6.2.1 Evacuation and Relocation Plan and Fire Drills.

20.6.2.1.1 The administration of every ambulatory health care facility shall have, in effect and available to all supervisory personnel, written copies of a plan for the protection of all persons in the event of fire, for their evacuation to areas of refuge, and for their evacuation from the building when necessary. [*101*:20.7.1.1; *101*:21.7.1.1]

20.6.2.1.1.1 All employees shall be periodically instructed and kept informed with respect to their duties under the plan required by 20.6.2.1.1. [*101*:20.7.1.2; *101*:21.7.1.2]

20.6.2.1.1.2 A copy of the plan required by 20.6.2.1.1 shall be readily available at all times in the telephone operator's location or at the security center. [*101*:20.7.1.3; *101*:21.7.1.3]

20.6.2.1.1.3 The provisions of Section 10.6 and 20.6.2.1.2 through 20.6.2.2.3 shall apply.

20.6.2.1.2* Fire drills in ambulatory health care facilities shall include the transmission of a fire alarm signal and simulation of emergency fire conditions. [*101*:20.7.1.4; *101*:21.7.1.4]

20.6.2.1.2.1 Patients shall not be required to be moved during drills to safe areas or to the exterior of the building. [*101*:20.7.1.5; *101*:21.7.1.5]

20.6.2.1.2.2 Drills shall be conducted quarterly on each shift to familiarize facility personnel (nurses, interns, maintenance engineers, and administrative staff) with the signals and emergency action required under varied conditions. [*101*:20.7.1.6; *101*:21.7.1.6]

20.6.2.1.2.3 When drills are conducted between 9:00 p.m. (2100 hours) and 6:00 a.m. (0600 hours), a coded announcement shall be permitted to be used instead of audible alarms. [*101*:20.7.1.7; *101*:21.7.1.7]

20.6.2.1.3 Employees of ambulatory health care facilities shall be instructed in life safety procedures and devices. [*101*:20.7.1.8; *101*:21.7.1.8]

20.6.2.2 Procedure in Case of Fire.

20.6.2.2.1* Protection of Patients.

20.6.2.2.1.1 For ambulatory health care facilities, the proper protection of patients shall require the prompt and effective response of ambulatory health care personnel. [*101*:20.7.2.1.1; *101*:21.7.2.1.1]

20.6.2.2.1.2 The basic response required of staff shall include the following:

(1) Removal of all occupants directly involved with the fire emergency
(2) Transmission of an appropriate fire alarm signal to warn other building occupants and summon staff
(3) Confinement of the effects of the fire by closing doors to isolate the fire area
(4) Relocation of patients as detailed in the facility's fire safety plan [*101*:20.7.2.1.2; *101*:21.7.2.1.2]

20.6.2.2.2 Fire Safety Plan. A written fire safety plan shall provide for the following:

(1) Use of alarms
(2) Transmission of alarms to fire department
(3) Response to alarms
(4) Isolation of fire
(5) Evacuation of immediate area
(6) Evacuation of smoke compartment
(7) Preparation of floors and building for evacuation
(8) Extinguishment of fire [*101*:20.7.2.2; *101*:21.7.2.2]

20.6.2.2.3 Staff Response.

20.6.2.2.3.1 All personnel shall be instructed in the use of and response to fire alarms. [*101*:20.7.2.3.1; *101*:21.7.2.3.1]

20.6.2.2.3.2 All health care personnel shall be instructed in the use of the code phrase to ensure transmission of an alarm under the following conditions:

(1) When the individual who discovers a fire must immediately go to the aid of an endangered person
(2) During a malfunction of the building fire alarm system [*101*:20.7.2.3.2; *101*:21.7.2.3.2]

20.6.2.2.3.3 Personnel hearing the code announced shall first activate the building fire alarm using the nearest fire alarm box and then shall execute immediately their duties as outlined in the fire safety plan. [*101*:20.7.2.3.3; *101*:21.7.2.3.3]

20.6.2.3 Maintenance of Exits.

20.6.2.3.1 Proper maintenance shall be provided to ensure the dependability of the method of evacuation selected. [*101*:20.7.3.1; *101*:21.7.3.1]

20.6.2.3.2 Ambulatory health care occupancies that find it necessary to lock exits shall, at all times, maintain an adequate staff qualified to release locks and direct occupants from the immediate danger area to a place of safety in case of fire or other emergency. [*101*:20.7.3.2; *101*:21.7.3.2]

20.6.2.4* Smoking. Smoking regulations shall be adopted and shall include not less than the following provisions:

(1) Smoking shall be prohibited in any room, ward, or compartment where flammable liquids, combustible gases, or oxygen is used or stored and in any other hazardous location, and such areas shall be posted with signs that read NO SMOKING or shall be posted with the international symbol for no smoking.
(2) In ambulatory health care facilities where smoking is prohibited and signs are placed at all major entrances, secondary signs with language that prohibits smoking shall not be required.
(3) Smoking by patients classified as not responsible shall be prohibited.
(4) The requirement of 20.6.2.4(3) shall not apply where the patient is under direct supervision.
(5) Ashtrays of noncombustible material and safe design shall be provided in all areas where smoking is permitted.
(6) Metal containers with self-closing cover devices into which ashtrays can be emptied shall be readily available to all areas where smoking is permitted. [***101***:20.7.4; ***101***:21.7.4]

20.6.2.5 Furnishings, Bedding, and Decorations.

20.6.2.5.1* Draperies, curtains, and other loosely hanging fabrics and films serving as furnishings or decorations in ambulatory health care occupancies shall be in accordance with the provisions of 20.6.2.5.2, and the following also shall apply:

(1) Such curtains shall include cubicle curtains.
(2) Such curtains shall not include curtains at showers. [***101***:20.7.5.1; ***101***:21.7.5.1]

20.6.2.5.2* Where required by the applicable provisions of this *Code*, draperies, curtains, and other similar loosely hanging furnishings and decorations shall meet the flame propagation performance criteria contained in NFPA 701. [***101***:10.3.1]

20.6.2.5.3 Newly introduced upholstered furniture shall comply with one of the following provisions:

(1) The furniture shall meet the criteria specified in 10.3.2.1 and 10.3.3 of NFPA *101*.
(2) The furniture shall be in a building protected throughout by an approved, supervised automatic sprinkler system in accordance with NFPA 13. [***101***:20.7.5.2; ***101***:21.7.5.2]

20.6.2.5.4 Newly introduced mattresses shall comply with one of the following provisions:

(1) The mattresses shall meet the criteria specified in 10.3.2.2 and 10.3.4 of NFPA *101*.
(2) The mattresses shall be in a building protected throughout by an approved, supervised automatic sprinkler system in accordance with NFPA 13. [***101***:20.7.5.3; ***101***:21.7.5.3]

20.6.2.5.5 Combustible decorations shall be prohibited, unless one of the following criteria is met:

(1) They are flame-retardant.
(2) They are decorations, such as photographs and paintings, in such limited quantities that a hazard of fire development or spread is not present. [***101***:20.7.5.4; ***101***:21.7.5.4]

20.6.2.5.6 Soiled linen or trash collection receptacles shall not exceed 32 gal (121 L) in capacity, and the following also shall apply:

(1) The average density of container capacity in a room or space shall not exceed 0.5 gal/ft^2 (20.4 L/m^2).
(2) A capacity of 32 gal (121 L) shall not be exceeded within any 64 ft^2 (6 m^2) area.
(3) Mobile soiled linen or trash collection receptacles with capacities greater than 32 gal (121 L) shall be located in a room protected as a hazardous area when not attended.
(4) Container size and density shall not be limited in hazardous areas. [***101***:20.7.5.5; ***101***:21.7.5.5]

20.6.2.6 Portable Space-Heating Devices. Portable space-heating devices shall be prohibited in all ambulatory health care occupancies, unless both of the following criteria are met:

(1) Such devices are used only in nonsleeping staff and employee areas.
(2) The heating elements of such devices do not exceed 212°F (100°C). [***101***:20.7.8; ***101***:21.7.8]

20.7 Detention and Correctional Occupancies.

20.7.1 Application. New and existing detention and correctional occupancies shall comply with Section 20.7 and NFPA *101*.

20.7.2 Operating Features.

20.7.2.1 Attendants, Evacuation Plan, Fire Drills.

20.7.2.1.1 Detention and correctional facilities, or those portions of facilities having such occupancy, shall be provided with 24-hour staffing, and the following requirements also shall apply:

(1) Staff shall be within three floors or a 300 ft (91 m) horizontal distance of the access door of each resident housing area.
(2) For Use Condition III, Use Condition IV, and Use Condition V, the arrangement shall be such that the staff involved starts the release of locks necessary for emergency evacuation or rescue and initiates other necessary emergency actions within 2 minutes of alarm.
(3) The following shall apply to areas in which all locks are unlocked remotely in compliance with 22.2.11.8 or 23.2.11.8 of NFPA *101*:
   (a) Staff shall not be required to be within three floors or 300 ft (91 m) of the access door.
   (b) The 10-lock, manual key exemption of 22.2.11.8.2 or 23.2.11.8.2 of NFPA *101* shall not be permitted to be used in conjunction with the alternative requirement of 20.7.2.1.1(3)(a). [***101***:22.7.1.1; ***101***:23.7.1.1]

20.7.2.1.2* Provisions shall be made so that residents in Use Condition III, Use Condition IV, and Use Condition V shall be able to notify staff of an emergency. [***101***:22.7.1.2; ***101***:23.7.1.2]

20.7.2.1.3* The administration of every detention or correctional facility shall have, in effect and available to all supervisory personnel, written copies of a plan for the protection of all persons in the event of fire, for their evacuation to areas of refuge, and for evacuation from the building when necessary. [***101***:22.7.1.3; ***101***:23.7.1.3]

20.7.2.1.3.1 All employees shall be instructed and drilled with respect to their duties under the plan. [***101***:22.7.1.3.1; ***101***:23.7.1.3.1]

20.7.2.1.3.2 The plan shall be coordinated with, and reviewed by, the fire department legally committed to serve the facility. [***101***:22.7.1.3.2; ***101***:23.7.1.3.2]

20.7.2.1.4 Employees of detention and correctional occupancies shall be instructed in the proper use of portable fire extinguishers and other manual fire suppression equipment. [***101***:22.7.1.4; ***101***:23.7.1.4]

20.7.2.1.4.1 The training specified in 20.7.2.1.4 shall be provided to new staff promptly upon commencement of duty. [*101*:22.7.1.4.1; *101*:23.7.1.4.1]

20.7.2.1.4.2 Refresher training shall be provided to existing staff at not less than annual intervals. [*101*:22.7.1.4.2; *101*:23.7.1.4.2]

20.7.2.2 Combustible Personal Property. Books, clothing, and other combustible personal property allowed in sleeping rooms shall be stored in closable metal lockers or an approved fire-resistant container. [*101*:22.7.2; *101*:23.7.2]

20.7.2.3 Heat-Producing Appliances. The number of heat-producing appliances, such as toasters and hot plates, and the overall use of electrical power within a sleeping room shall be controlled by facility administration. [*101*:22.7.3; *101*:23.7.3]

20.7.2.4* Furnishings, Bedding, and Decorations.

20.7.2.4.1 Draperies and curtains, including privacy curtains, in detention and correctional occupancies shall be in accordance with the provisions of 20.7.2.4.2. [*101*:22.7.4.1; *101*:23.7.4.1]

20.7.2.4.2* Where required by the applicable provisions of this *Code*, draperies, curtains, and other similar loosely hanging furnishings and decorations shall meet the flame propagation performance criteria contained in NFPA 701. [*101*:10.3.1]

20.7.2.4.3 Newly introduced upholstered furniture within detention and correctional occupancies shall be tested in accordance with the provisions of 10.3.2.1(2) and 10.3.3 of NFPA *101*. [*101*:23.7.4.2]

20.7.2.4.4* Newly introduced mattresses within detention and correctional occupancies shall be tested in accordance with the provisions of 10.3.2.2 and 10.3.4 of NFPA *101*. [*101*:23.7.4.3]

20.7.2.4.5 Combustible decorations shall be prohibited in any detention or correctional occupancy unless flame-retardant. [*101*:22.7.4.4; *101*:23.7.4.4]

20.7.2.4.6 Wastebaskets and other waste containers shall be of noncombustible or other approved materials. Waste containers with a capacity exceeding 20 gal (76 L) shall be provided with a noncombustible lid or lid of other approved material. [*101*:22.7.4.5; *101*:23.7.4.5]

20.7.2.5 Keys. All keys necessary for unlocking doors installed in a means of egress shall be individually identified by both touch and sight. [*101*:22.7.5; *101*:23.7.5]

20.7.2.6 Portable Space-Heating Devices. Portable space-heating devices shall be prohibited in all detention and correctional occupancies. [*101*:22.7.6; *101*:23.7.6]

20.8 Hotels and Dormitories.

20.8.1 Application. New and existing hotels and dormitories shall comply with Section 20.8 and NFPA *101*.

20.8.2 Operating Features.

20.8.2.1 Hotel Emergency Organization.

20.8.2.1.1* Employees of hotels shall be instructed and drilled in the duties they are to perform in the event of fire, panic, or other emergency. [*101*:28.7.1.1; *101*:29.7.1.1]

20.8.2.1.2* Drills of the emergency organization shall be held at quarterly intervals and shall cover such points as the operation and maintenance of the available first aid fire appliances, the testing of devices to alert guests, and a study of instructions for emergency duties. [*101*:28.7.1.2; *101*:29.7.1.2]

20.8.2.2 Emergency Duties. Upon discovery of a fire, employees shall carry out the following duties:

(1) Activation of the facility fire protection signaling system, if provided
(2) Notification of the public fire department
(3) Other action as previously instructed [*101*:28.7.2; *101*:29.7.2]

20.8.2.3 Drills in Dormitories. Emergency egress and relocation drills shall be regularly conducted in accordance with Section 10.6. [*101*:28.7.3; *101*:29.7.3]

20.8.2.4 Emergency Instructions for Residents or Guests.

20.8.2.4.1* A floor diagram reflecting the actual floor arrangement, exit locations, and room identification shall be posted in a location and manner acceptable to the AHJ on, or immediately adjacent to, every guest room door in hotels and in every resident room in dormitories. [*101*:28.7.4.1; *101*:29.7.4.1]

20.8.2.4.2* Fire safety information shall be provided to allow guests to make the decision to evacuate to the outside, to evacuate to an area of refuge, to remain in place, or to employ any combination of the three options. [*101*:28.7.4.2; *101*:29.7.4.2]

20.8.2.5 Contents and Furnishings.

20.8.2.5.1 Contents and furnishings shall not be required to comply with Section 10.3 of NFPA *101*. [*101*:28.3.3.4.1; *101*:29.3.3.4.1]

20.8.2.5.2 New draperies, curtains, and other similar loosely hanging furnishings and decorations shall be flame resistant as demonstrated by testing in accordance with NFPA 701. [*101*:28.3.3.4.2; *101*:29.3.3.4.2]

20.8.2.5.3 Furnishings or decorations of an explosive or highly flammable character shall not be used. [*101*:28.3.3.4.3; *101*:29.3.3.4.3]

20.8.2.5.4 Fire-retardant coatings shall be maintained to retain the effectiveness of the treatment under service conditions encountered in actual use. [*101*:28.3.3.4.4; *101*:29.3.3.4.4]

20.8.2.5.5* Where required by the applicable provisions of this *Code*, draperies, curtains, and other similar loosely hanging furnishings and decorations shall meet the flame propagation performance criteria in NFPA 701. [*101*:10.3.1]

20.8.2.6 Fuel-Fired Heaters. Unvented fuel-fired heaters, other than gas space heaters in compliance with NFPA 54, *National Fuel Gas Code*, shall not be used. [*101*:28.5.2.2; *101*:29.5.2.2]

20.9 Apartment Buildings.

20.9.1 Application. New and existing apartment buildings shall comply with Section 20.9 and NFPA *101*.

20.9.2 Operating Features.

20.9.2.1 Emergency Instructions for Residents of Apartment Buildings. Emergency instructions shall be provided annually to each dwelling unit to indicate the location of alarms, egress paths, and actions to be taken, both in response to a fire in the dwelling unit and in response to the sounding of the alarm system. [*101*:30.7; *101*:31.7]

20.9.2.2 Fuel-Fired Heaters. Unvented fuel-fired heaters, other than gas space heaters in compliance with NFPA 54, shall not be used. [*101*:30.5.2.2; *101*:31.5.2.2]

20.10 Lodging or Rooming Houses.

20.10.1 Application. New and existing lodging or rooming houses shall comply with Section 20.10 and NFPA *101*.

20.10.2 Fuel-Fired Heaters. Unvented fuel-fired heaters, other than gas space heaters in compliance with NFPA 54, shall not be used. [***101***:26.5.2.2]

20.11 One- and Two-Family Dwellings and Manufactured Housing.

20.11.1 Application. New and existing one- and two-family dwellings shall comply with Section 20.11 and NFPA *101*.

20.11.2 Fuel-Fired Heaters. Unvented fuel-fired heaters shall not be used, unless they are listed and approved. [***101***:24.5.1.2]

20.11.3 Manufactured Housing. New manufactured housing shall comply with Section 20.11 and NFPA 501, *Standard on Manufactured Housing*.

20.12 Mercantile Occupancies.

20.12.1 Application. New and existing mercantile occupancies shall comply with Section 20.12 and NFPA *101*.

20.12.2 Operating Features.

20.12.2.1 Drills. In every Class A or Class B mercantile occupancy, employees shall be periodically trained in accordance with Section 10.6. [***101***:36.7.1; ***101***:37.7.1]

20.12.2.2 Extinguisher Training. Employees of mercantile occupancies shall be periodically instructed in the use of portable fire extinguishers. [***101***:36.7.2; ***101***:37.7.2]

20.13 Business Occupancies.

20.13.1 Application. New and existing business occupancies shall comply with Section 20.13 and NFPA *101*.

20.13.2 Operating Features.

20.13.2.1 Drills. In all business occupancy buildings occupied by more than 500 persons, or by more than 100 persons above or below the street level, employees and supervisory personnel shall be periodically instructed in accordance with Section 10.6 and shall hold drills periodically where practicable. [***101***:38.7.1; ***101***:39.7.1]

20.13.2.2 Extinguisher Training. Designated employees of business occupancies shall be periodically instructed in the use of portable fire extinguishers. [***101***:38.7.2; ***101***:39.7.2]

20.14 Industrial Occupancies.

20.14.1 Application. New and existing industrial occupancies shall comply with Section 20.14 and NFPA *101*.

20.15 Storage Occupancies.

20.15.1 Application. New and existing storage occupancies shall comply with NFPA *101*, Chapter 34, appropriate codes or standards referenced in Chapter 2, and Section 20.15.

20.15.2 Permits. Permits, where required, shall comply with Section 1.12.

20.15.3 Storage, Arrangement, Protection, and Quantities of Hazardous Commodities. The storage, arrangement, protection, and quantities of hazardous commodities shall be in accordance with the applicable provisions of the following:

(1) NFPA 13, *Standard for the Installation of Sprinkler Systems*
(2) Chapter 66
(3) Chapter 61
(4) Chapter 70
(5) NFPA 434, *Code for the Storage of Pesticides*
(6) Chapter 65 [***101***:36.4.5.3; ***101***:37.4.5.3]

20.15.4 Bulk Storage Elevators. Bulk storage elevators shall comply with 20.15.4.1 and NFPA 61, *Standard for the Prevention of Fires and Dust Explosions in Agricultural and Food Processing Facilities*.

20.15.4.1* Bulk storage elevators shall apply to all of the following:

(1) All facilities that receive, handle, process, dry, blend, use, mill, package, store, or ship dry agricultural bulk materials, their by-products, or dusts that include grains, oilseeds, agricultural seeds, legumes, sugar, flour, spices, feeds, and other related materials
(2) All facilities designed for manufacturing and handling starch, including drying, grinding, conveying, processing, packaging, and storing dry or modified starch, and dry products and dusts generated from these processes
(3) Those seed preparation and meal-handling systems of oilseed processing plants not covered by NFPA 36, *Standard for Solvent Extraction Plants* [**61**:1.1.1]

20.15.4.2 NFPA 61 shall not apply to oilseed extraction plants that are covered by NFPA 36. [**61**:1.1.2]

20.15.4.3 Applicability.

20.15.4.3.1 Unless otherwise noted, the provisions of 20.15.4 on bulk storage elevators shall not be applied to facilities, equipment, structures, or installations that were existing or approved for construction or installation prior to the effective date of this *Code*, except in those cases where it is determined by the AHJ that the existing situation involves a distinct hazard to life or adjacent property.

20.15.4.3.2 The requirements of Chapter 11 of NFPA 61 shall apply to all facilities.

20.15.5 Record Storage.

20.15.5.1 Records protection equipment, facilities, and records-handling techniques that provide protection from the hazards of fire shall comply with 20.15.5 and NFPA 232, *Standard for the Protection of Records*.

20.15.5.2* Because of the volume of records, 20.15.5.1 shall not cover large archives or records storage buildings.

20.15.6 Cellulose Nitrate Motion Picture Film Storage.

20.15.6.1 The storage and handling of cellulose nitrate film records shall comply with 20.15.6 and NFPA 40, *Standard for the Storage and Handling of Cellulose Nitrate Film*.

20.15.6.2 Permits. Permits, where required, shall comply with Section 1.12.

20.15.7 High-Piled Storage.

20.15.7.1 Buildings containing high-piled storage shall comply with NFPA 13, Chapter 34, and 20.15.7.

20.15.7.2 Permits. Permits, where required, shall comply with Section 1.12.

20.16 Special Structures and High-Rise Buildings.

20.16.1 Application.

20.16.1.1 New and existing special structures and high-rise buildings shall comply with NFPA *101*.

20.16.1.2 Motion picture and television production studio soundstages and approved production facilities shall comply with Chapter 32.

20.17 Historic Buildings and Cultural Resources.

20.17.1 Historic buildings shall comply with this *Code* or with the provisions of NFPA 914, *Code for Fire Protection of Historic Structures.*

20.17.2 Buildings that store or display cultural resources, including museum or library collections, or spaces within other buildings used for such culturally significant purposes, shall comply with this *Code* or with the provisions of NFPA 909, *Code for the Protection of Cultural Resources.*

20.17.3 The provisions of this *Code* relating to the construction, repair, alteration, enlargement, restoration, and moving of buildings or structures shall not be mandatory for the following:

(1) Existing buildings or structures identified and classified by the state or local government authority as historic buildings where such buildings comply with NFPA 914
(2)*Buildings or spaces within buildings that store or display cultural resources and comply with the provisions of NFPA 909

Chapter 21 Airports and Heliports

21.1 Hangars. The construction and protection of aircraft hangars from fire shall comply with this section; NFPA 409, *Standard on Aircraft Hangars*; NFPA 410, *Standard on Aircraft Maintenance*; and Section 40.6 and Section 42.6 of NFPA *101.*

21.1.1 Permits. Permits, where required, shall comply with Section 1.12.

21.1.2 Fire Department Access. Fire department access roads shall be provided and maintained in accordance with Section 18.2 for all aircraft hangars.

21.1.3 Smoking.

21.1.3.1 Smoking shall be prohibited in aircraft hangars.

21.1.3.2 Smoking shall be in accordance with Section 10.10.

21.2 Terminals.

21.2.1 Application. Airport terminal buildings shall comply with the requirements of Section 21.2 and NFPA 415, *Standard on Airport Terminal Buildings, Fueling Ramp Drainage, and Loading Walkways.*

21.2.2 General.

21.2.2.1 Permits. Permits, where required, shall comply with Section 1.12.

21.2.2.2 Fire Department Access. Fire department access roads for all airport terminal buildings shall be provided and maintained in accordance with Section 18.2.

21.2.2.3 Smoking.

21.2.2.3.1 Smoking shall be prohibited in fuel ramp areas and loading walkways.

21.2.2.3.2 Smoking shall be in accordance with Section 10.10.

21.2.3 General.

21.2.3.1* Airport terminal buildings shall be of Type I, Type II, or Type IV construction, as defined in NFPA 220, *Standard on Types of Building Construction.* [**415:**4.1.1]

21.2.3.2* Interior finish shall be limited to that permitted in Class A places of assembly as specified in NFPA *101.* [**415:**4.1.2]

21.2.3.3 Aircraft fueling facilities and ramps shall be designed in accordance with NFPA 407, *Standard for Aircraft Fuel Servicing,* and Chapter 5 of NFPA 415, *Standard on Airport Terminal Buildings, Fueling Ramp Drainage, and Loading Walkways.* [**415:**4.1.3]

21.2.3.4 Belowgrade areas or blind spaces in airport terminal buildings shall be protected against flammable fuel or vapor penetration or shall be mechanically ventilated to provide at least four complete air changes per hour. The mechanical ventilation system shall be installed in accordance with Chapters 2 and 3 of NFPA 91, *Standard for Exhaust Systems for Air Conveying of Vapors, Gases, Mists, and Noncombustible Particulate Solids.* [**415:**4.1.4]

21.2.3.5 Glazing Material Covered Openings Facing the Ramp.

21.2.3.5.1 Openings covered with glazing material that have the lowest part of the glazing material not less than 7 ft (2.1 m) above each finished floor level shall not be required to comply with 21.2.3.5.3. [**415:**4.1.5.1]

21.2.3.5.2 Openings covered with glazing material listed for use in a fire barrier and installed in accordance with the listing shall not be required to comply with 21.2.3.5.3. [**415:**4.1.5.2]

21.2.3.5.3 Where potential fuel spill points are located less than 100 ft (30.5 m) horizontally from glazing material covered openings in airport terminal building walls facing the airport ramp, they shall be provided with an automatically activated water spray system in accordance with 21.2.3.5.3.1 or an automatically activated, listed fire shutter system in accordance with 21.2.3.5.3.2. *(See Annex C of NFPA 415.)* [**415:**4.1.5.3]

21.2.3.5.3.1 Where an automatically activated water spray system(s) is provided, it shall be installed in accordance with NFPA 15, *Standard for Water Spray Fixed Systems for Fire Protection.* [**415:**4.1.5.3.1]

21.2.3.5.3.1.1 The system shall be designed to provide a density of at least 0.25 gpm/ft^2 [10.2 (L/min)/m^2] over the exterior surface area of the glazing material. [**415:**4.1.5.3.1.1]

21.2.3.5.3.1.2 Where multiple water spray systems are used, the water supply shall be capable of supplying all systems that could be expected to operate as a result of one fire incident. [**415:**4.1.5.3.1.2]

21.2.3.5.3.1.3 The detection system design analysis for the water spray system shall include consideration of false alarms and detector response time. [**415:**4.1.5.3.1.3]

21.2.3.5.3.2 Where an automatically activated, listed fire shutter is provided, it shall be installed in accordance with its listing. [**415:**4.1.5.3.2]

21.2.4 Heating, Ventilating, and Air Conditioning.

21.2.4.1 Heating, ventilating, and air-conditioning systems shall be installed in accordance with Section 11.2 and Section 11.5, as applicable.

21.2.4.2* Air supply intake and exhaust openings for air-conditioning or ventilating equipment serving the terminal building, if located on the ramp side, shall be not less than 10 ft (3 m) above the grade level of the ramp and shall be at least 50 ft (15 m) from any point of flammable vapor release. [**415:**4.2.2]

21.2.4.3* Openings to rooms containing coal-, gas-, or oil-fired equipment, or any rooms containing any other open flame device, that face the ramp side of the terminal shall be above ramp grade and 50 ft (15 m) from any point of flammable vapor release. [**415:**4.2.3]

21.2.4.4 Stacks or chimneys from a boiler, heater, or incinerator shall terminate at least 20 ft (6.1 m) above ramp grade and above the roof of the building. Stacks or chimneys from boilers or heaters using solid fuel or from any incinerator shall be fitted with double screening to control fly ash and sparks. Such stacks or chimneys shall be located so the outlet is at least 100 ft (30.5 m) horizontally from any aircraft position or point of flammable vapor release. [**415:**4.2.4]

21.2.5* In addition to exit signage requirements specified in NFPA *101*, doors serving as exits that discharge onto an airport ramp and are provided solely for the purpose of meeting emergency egress requirements from public areas shall be placarded "Emergency Exit Only" in letters at least 2 in. (50 mm) high. [**415:**4.3.2]

21.2.6* Fire Protection — Sprinkler Systems.

21.2.6.1 The airport terminal building with more than 12,000 ft^2 (1115 m^2) total floor area for the assembly portion of the occupancy shall be provided with an automatic sprinkler system installed in accordance with NFPA 13. [**415:**4.5.1.1]

21.2.6.2 Terminal buildings with less than 12,000 ft^2 (1115 m^2) total floor area for the assembly portion of the occupancy shall not be required to be provided with an automatic sprinkler system. [**415:**4.5.1.2]

21.2.6.2.1 Passenger handling areas shall be classified as Ordinary Hazard Group 1 Occupancy, as defined in NFPA 13, for the purpose of sprinkler system design. [**415:**4.5.1.3]

21.2.6.2.2 Baggage, package, and mail handling areas shall be classified as Ordinary Hazard Group 2 Occupancy, as defined in NFPA 13, for the purpose of sprinkler system design. [**415:**4.5.1.4]

21.2.6.2.3* Other areas of the airport terminal building shall be classified in accordance with 3.8.1 of NFPA 13, based on the occupancy of the area. [**415:**4.5.1.5]

21.2.6.2.4 Covered Plane-Loading Positions. Airport terminal buildings having canopy areas or roofed-over recesses at aircraft loading positions that, in effect, place the aircraft totally or substantially under such canopies or roofs shall have these canopies or roofs protected by automatic sprinkler systems in accordance with NFPA 409, *Standard on Aircraft Hangars.* [**415:**4.5.1.6]

21.2.6.3 Fire Alarm and Communications Systems. A fire alarm and communications system shall be installed as required by 13.7.2.1. [**415:**4.5.2]

21.2.6.3.1 Means to alert the public fire department or the airport fire station shall be available through manual fire alarm pull stations. Manual fire alarm services shall be installed in accordance with *NFPA 72.* [**415:**4.5.2.1]

21.2.6.3.2* Annunciation for all building fire alarm signals shall be provided near the front entrance of the building. [**415:**4.5.2.2]

21.2.6.3.3 If the public fire department has two-way voice communication with a constantly attended location, 21.2.6.3.3 shall not apply. [**415:***4.5.2.3*]

21.2.6.4 Fire Hydrants. Fire hydrants shall be provided on both the ramp and street sides of airport terminal buildings. Such hydrants shall be located so that no portion of the terminal building is more than 500 ft (152.4 m) from a hydrant. [**415:**4.5.3]

21.2.6.5 Standpipe and Hose Systems. Standpipe and hose systems shall be provided for all airport terminal buildings in excess of two stories [35 ft (10.7 m)] in height or 100 ft (30.5 m) in shortest horizontal dimension. Standpipe and hose systems shall be installed in accordance with Section 13.2. [**415:**4.5.4]

21.2.6.5.1 Class I standpipe systems shall be provided in buildings protected throughout by an approved automatic sprinkler system. Each 2½ in. (63.5 mm) hose connection shall be equipped with a 2½ in. × 1½ in. (63.5 mm × 38 mm) reducer and cap. [**415:**4.5.4.1]

21.2.6.5.2 Class III standpipe systems shall be provided in nonsprinklered buildings. Paragraphs 5.3.3.1 and 5.3.3.2 of NFPA 14, *Standard for the Installation of Standpipe and Hose Systems,* for Class III systems shall be applicable to this requirement. [**415:**4.5.4.2]

21.2.6.6 Portable Fire Extinguishers. Portable fire extinguishers shall be provided throughout the airport terminal building in accordance with Section 13.6. [**415:**4.5.6]

21.3 Rooftop Heliport Construction and Protection.

21.3.1 Application. Rooftop heliport construction and protection shall comply with Section 21.3 and NFPA 418, *Standard for Heliports.*

21.3.1.1 Section 21.3 does not apply to ground level helicopter hangars. All hangars not covered by this section shall comply with NFPA 409.

21.3.1.2 Temporary landing sites and emergency evacuation facilities are outside the scope of Section 21.3.

21.3.2 General.

21.3.2.1 Permits. Permits, where required, shall comply with Section 1.12.

21.3.2.2 Fire Department Access. Fire department access roads for all buildings with a rooftop heliport shall be provided and maintained in accordance with Section 18.2.

21.3.2.3 Smoking.

21.3.2.3.1 Smoking shall be prohibited at rooftop heliports.

21.3.2.3.2 Smoking shall be in accordance with Section 10.10.

21.3.3 General Requirements — Land-Based Facilities.

21.3.3.1* Plans. Plans for construction and protection of heliports shall be approved by the AHJ. [**418:**2.1]

21.3.3.2 Tank Locations.

21.3.3.2.1 Storage, handling, and use of flammable and combustible liquids shall be in accordance with Chapter 66. [**418:**2.2.1]

21.3.3.2.2 Oxygen and other medical gases shall be stored and used in accordance with 5.1.3.3.1.6 and Section 9.4 of NFPA 99, *Standard for Health Care Facilities.* [**418:**2.2.2]

21.3.3.2.3 Aboveground flammable liquid storage tanks, compressed gas storage tanks, and liquefied gas storage tanks shall be laterally located at least 50 ft (15.2 m) from the edge of the final approach and takeoff (FATO) area as defined in FAA A/C 150/5390-2A, *Heliport Design Advisory Circular.* [**418:**2.2.3]

21.3.3.3 Fire-Fighting Access.

21.3.3.3.1 The heliport shall have at least one access point for fire-fighting/rescue personnel. Where practical, a second access point shall be available and located as remotely as possible from the other. [**418:**2.3.1]

21.3.3.3.2 Fences shall not prevent rapid access by fire-fighting/rescue personnel. [**418:**2.3.2]

21.3.3.4 Landing Pad Pitch. The heliport shall be pitched or sloped so that drainage flows away from access points and passenger holding areas. [**418:**2.4]

21.3.3.5 No Smoking. No smoking shall be permitted within 50 ft (15.2 m) of the landing pad edge. No smoking signs shall be erected at access/egress points to the heliport. [**418:**2.5]

21.3.3.6 Fueling System. Fueling systems shall be designed in accordance with Section 42.4. [**418:**2.6]

21.3.3.6.1 Fixed fueling dispensing equipment shall be located outside of rooftop hangars. Fueling equipment shall not hinder or obstruct access to exits or fire-fighting equipment. [**418:**2.6.1]

21.3.3.6.2 Fuel pump manifolds shall be located 25 ft (7.6 m) from rooftop hangars and fixed fire protection equipment. [**418:**2.6.2]

21.3.4 Rooftop Landing Facilities — Additional Protection.

21.3.4.1 Structural Support. Main structural support members that could be exposed to a fuel spill shall be made fire resistant using listed materials and methods to provide a fire-resistance rating of not less than 2 hours. [**418:**3.1]

21.3.4.2 Landing Pad Pitch. The rooftop landing pad shall be pitched to provide drainage at a slope of 0.5 percent to 2 percent. The pitch of the pad shall be designed to protect, at a minimum, the primary egress path, passenger holding area, rooftop hangar, and fire protection activation systems. Flow shall not penetrate alternate egress points, stairways, ramps, hatches, and other openings not designed for drainage. [**418:**3.2]

21.3.4.3 Landing Pad Construction Materials. The rooftop landing pad surface shall be constructed of noncombustible, nonporous materials that are approved. The contiguous building roof covering within 50 ft (15.2 m) of the landing pad edge shall have a Class A rating. [**418:**3.3]

21.3.4.4* Means of Egress. At least two approved means of egress from the rooftop landing pad edge shall be provided and shall be remotely located from each other to the extent practical. [**418:**3.4]

21.3.4.4.1 For heliports occupied by 50 or more people, two approved means of egress from the roof shall be provided and shall be remotely located from each other to the extent practical, but shall not be located less than 30 ft (9.1 m) from each other. For heliports occupied by fewer than 50 people, one approved means of egress from the roof shall be provided. [**418:**3.4.1]

21.3.4.4.2 Means of egress from the rooftop landing pad and roof shall not obstruct flight operations. [**418:**3.4.2]

21.3.5 Fire-Fighting Access. The helicopter rooftop landing pad shall have at least two access points for fire-fighting purposes. Access for fire-fighting personnel through the landing pad egress shall be permitted. [**418:**3.5]

21.3.6 Fire Protection. A foam fire-extinguishing system shall be designed and installed to protect the rooftop landing pad.

Exception No. 1: A foam fire-extinguishing system shall not be required for heliports located on parking garages, unoccupied buildings, or other similar unoccupied structures.

*Exception No. 2: For H-1 heliports, two portable foam extinguishers, each having a rating of 20-A:160-B, shall be permitted to be used to satisfy this requirement. [**418:**3.6]*

21.3.6.1* The foam discharge rate shall be as shown in Table 21.3.6.1. [**418:**3.6.1]

Table 21.3.6.1 Foam Discharge Rates

Foam	Discharge Rate	
	gpm/ft^2	(L/min)/m^2
AFFF	0.10	4.1
Fluoroprotein	0.16	6.5
Protein	0.20	8.1

[**418:**Table 3.6.1]

21.3.6.2 The area of application of foam discharge for fixed discharge outlet systems shall be the entire rooftop landing pad. The duration shall be 5 minutes. [**418:**3.6.2]

21.3.6.3* The area of application of foam discharge for hose line systems shall be the practical critical fire area for the category of the helicopter landing facility, as shown in Table 21.3.6.3. The duration shall be 2 minutes. [**418:**3.6.3]

Table 21.3.6.3 Practical Critical Fire Areas

Category	Helicopter Overall Length*	Practical Critical Fire Area	
		ft^2	m^2
H-1	Up to but not including 50 ft (15.2 m)	375	34.8
H-2	From 50 ft (15.2 m) up to but not including 80 ft (24.4 m)	840	78.0
H-3	From 80 ft (24.4 m) up to but not including 120 ft (36.6 m)	1440	133.8

* Helicopter length, including the tail boom and the rotors.
[**418:**Table 3.6.3]

21.3.6.4 The water supply for the foam system shall be from a reliable source, approved by the AHJ. [**418:**3.6.4]

21.3.6.4.1 Fire pumps, if used, shall be installed in accordance with Section 13.4. [**418:**3.6.4.1]

21.3.6.4.2 Standpipes and hose stations, if used, shall be installed in accordance with Section 13.2. [**418:**3.6.4.2]

21.3.6.4.3 Where freezing is possible, adequate freeze protection shall be provided. [**418:**3.6.4.3]

21.3.6.5 The foam components shall be installed in a readily accessible area of the heliport and shall not penetrate the approach takeoff surface, transitional surfaces, and safety area as defined in FAA A/C 150/5390-2A, *Heliport Design Advisory Circular.* [**418:**3.6.5]

21.3.6.6 At facilities where there is more than one rooftop landing pad, the supply of foam available shall be sufficient to cover an incident on at least one of the pads. [**418:**3.6.6]

21.3.6.7 Where fixed foam systems utilizing fixed deck nozzles or oscillating foam turrets, or both, are installed, system components shall be listed or approved. [**418:**3.6.7]

21.3.6.8 Standpipes. If a building with a rooftop heliport is supplied with a standpipe system, a Class II standpipe shall be extended to the roof level on which the rooftop heliport is located. Such standpipe systems shall be installed in accordance with Section 13.2. [**418:**3.7]

21.3.6.9 Fire Alarm. Where buildings are provided with a fire alarm system, a manual pull station shall be provided for each designated means of egress from the roof. *(See 21.3.4.4.1.)* [**418:**3.8]

21.3.6.10 Portable Fire Extinguishers.

21.3.6.10.1 Quantity and Rating. At least one portable fire extinguisher as specified in Table 21.3.6.10.1 shall be provided for each takeoff and landing area, parking area, and fuel storage area.

Table 21.3.6.10.1 Minimum Ratings of Portable Fire Extinguishers for Heliport Categories

Category	Helicopter Overall Length*	Minimum Rating
H-1	Up to but not including 50 ft (15.2 m)	4-A:80-B
H-2	From 50 ft (15.2 m) up to but not including 80 ft (24.4 m)	10-A:120-B
H-3	From 80 ft (24.4 m) up to but not including 120 ft (36.6 m)	30-A:240-B

* Helicopter length, including the tail boom and the rotors. [**418:**Table 7.1]

Exception: This requirement shall not apply to unattended ground level heliports. [418:7.1]

21.3.6.10.2 Servicing. Portable fire extinguishers shall comply with Section 13.6 and NFPA 10, Chapters 1, 4, 5, and 6. [**418:**7.2]

Chapter 22 Automobile Wrecking Yards

22.1 General. Automobile wrecking yards shall be in accordance with this chapter.

22.2 Permits. Permits, where required, shall comply with Section 1.12.

22.3 Fire Department Access Roads. Fire department access roads shall be in accordance with Section 18.2.

22.4 Welding and Cutting. Welding and cutting operations shall be in accordance with Chapter 41.

22.5 Housekeeping. Housekeeping practices shall be in accordance with 10.1.1.

22.6 Fire Extinguishers. Fire extinguishers shall be placed and sized in accordance with Section 13.6.

22.7 Tire Storage. The storage of tires shall be in accordance with Chapters 33 and 34.

22.8 Burning Operations. Burning operations shall be in accordance with Section 10.11.

22.9 Motor Vehicle Fluids and Hazardous Materials.

22.9.1 General. The storage, use, and handling of motor vehicle fluids and hazardous materials shall be in accordance with Chapter 60 and Chapter 66.

22.9.2 Motor Vehicle Fluids.

22.9.2.1 Motor vehicle fluids shall be drained from salvage vehicles when such fluids are leaking.

22.9.2.2 Storage and handling of motor vehicle fluids shall be done in an approved manner.

22.9.2.3 Flammable and combustible liquids shall be stored and handled in accordance with Chapter 66.

22.9.3 Mitigation for Vehicle Fluid Leaks.

22.9.3.1 Supplies or equipment capable of mitigating leaks from fuel tanks, crankcases, brake systems, and transmissions shall be kept available on site.

22.9.3.2 Single-use plugging, diking, and absorbent materials shall be disposed of as hazardous waste and removed from the site in a manner approved by federal, state, and local requirements.

22.9.4 Air Bag Systems. Removed air bag systems shall be handled and stored in accordance with Chapter 60.

22.9.5 Lead-Acid Batteries.

22.9.5.1 Lead-acid batteries shall be removed from salvage vehicles when such batteries are leaking.

22.9.5.2 Lead-acid batteries that have been removed from vehicles shall be stored in an approved manner.

Chapter 23 Cleanrooms

23.1 General. All semiconductor facilities containing a cleanroom or a clean zone, or both, shall comply with NFPA 318, *Standard for the Protection of Semiconductor Fabrication Facilities,* and Chapter 23.

23.2 Applicability. Unless otherwise noted in NFPA 318, the provisions of NFPA 318 shall not be applied to facilities, equipment, structures, or installations that were existing or approved for construction or installation prior to the effective date of this *Code,* except in those cases where it is determined by the AHJ that the existing situation involves a distinct hazard to life or adjacent property.

23.3 Permits. Permits, where required, shall comply with Section 1.12.

Chapter 24 Drycleaning

24.1 General.

24.1.1 Drycleaning plants shall comply with NFPA 32, *Standard for Drycleaning Plants,* and this chapter.

24.1.2 Drycleaning plants or systems using solvents that have a flash point below 100°F (37.8°C) shall be prohibited.

24.2 Permits. Permits, where required, shall comply with Section 1.12.

Chapter 25 Grandstands and Bleachers, Folding and Telescopic Seating, Tents, and Membrane Structures

25.1 General.

25.1.1 The construction, location, protection, and maintenance of grandstands and bleachers, folding and telescopic seating, tents, and membrane structures shall meet the requirements of this chapter. Seating facilities located in the open air or within enclosed or semi-enclosed structures, such as tents, membrane structures, and stadium complexes, shall comply with NFPA *101*; NFPA 102, *Standard for Grandstands, Folding and Telescopic Seating, Tents, and Membrane Structures,* and Chapter 25.

25.1.2 Permits. Permits, where required, shall comply with Section 1.12.

25.1.3 Means of Egress.

25.1.3.1 Means of egress shall comply with the requirements of Chapter 14.

25.1.3.2 No guy wire or guy rope shall cross any means of egress at a height of less than 7 ft (2.1 m). Tent stakes adjacent to any means of egress from any tent open to the public shall be railed off, capped, or covered so as not to present a hazard to the public. [**102:**3.1.2]

25.1.4 Flammable Liquids and Gases.

25.1.4.1 Storage and handling of flammable liquids or gases shall be in accordance with the applicable standards and chapters below:

(1) Chapter 66
(2) NFPA 54, *National Fuel Gas Code*
(3) Chapter 69[**102:**9.1.1]

25.1.4.2 No storage or handling of flammable liquids or gases shall be permitted at any location where it would jeopardize egress from the structure. [**102:**9.1.2]

25.1.4.3 Refueling of equipment with liquids having flash points below 100°F (38°C) shall not be permitted within the structure. [**102:**9.1.3]

25.1.5 Fire Hazards.

25.1.5.1 The applicable provisions of NFPA *101* that pertain to fire hazards shall govern in tents and membrane structures. [**102:**9.2.1]

25.1.5.2 The ground enclosed by any tent or temporary membrane structure and for a reasonable distance, but not less than 10 ft (3 m) outside of such structure(s), shall be cleared of all flammable or combustible material or vegetation. This work shall be accomplished to the satisfaction of the AHJ prior to the erection of such structure(s). The premises shall be kept free from such flammable or combustible materials during the period for which the premises are used by the public.

*Exception: Necessary support equipment. [**102:**9.2.2]*

25.1.5.3 No hay, straw, shavings, or similar combustible materials that have not been treated to make them flame retardant to a degree acceptable to the AHJ shall be permitted within any structure used as an assembly occupancy.

*Exception: Animal bedding and fodders in quantities approved by the AHJ. [**102:**9.2.3]*

25.1.5.4 Where prohibited by the AHJ, smoking shall not be allowed in any tent or temporary membrane structure. [**102:**9.2.4]

25.1.5.5 Fireworks or unauthorized open flames shall be prohibited in any tent or temporary membrane structure.

*Exception: Where permitted by Section 65.11. [**102:**9.2.5]*

25.1.6* Fire-Extinguishing Equipment.

25.1.6.1 Enclosed stadia, arenas, and similar structures shall be protected throughout by an approved, supervised automatic sprinkler system in accordance with Section 13.3.

Exception No. 1: Where the ceiling or roof, whichever is lower, of the playing (activity) area is more than 55 ft (17 m) above the floor, the AHJ shall be permitted to allow the omission of sprinklers above the playing (activity) area.

*Exception No. 2: Sprinklers shall not be required above seating areas that view the playing (activity) area. [**102:**9.3.1]*

25.1.6.2 In other than enclosed stadia, arenas, and similar structures, enclosed areas shall be protected by an approved sprinkler system in accordance with Section 13.3.

Exception No. 1: Press boxes less than 1000 ft^2 (93 m^2) in area.

Exception No. 2: Storage facilities less than 1000 ft^2 (93 m^2) in area if enclosed with minimum 1-hour fire resistance–rated construction.

*Exception No. 3: Enclosed areas underneath grandstands or bleachers that comply with the exceptions to Section 4.8 of NFPA 102. [**102:**9.3.2]*

25.1.6.3 Portable fire-extinguishing equipment of approved types shall be furnished and maintained in tents and temporary membrane structures by the person operating any assembly occupancy in such amount and in such locations as directed by the AHJ.

*Exception: Where a functioning garden hose that can reach all portions of the private party tent is provided. [**102:**9.3.3]*

25.1.6.4 Fire-extinguishing equipment shall be maintained in accordance with Section 13.6. [**102:**9.3.4]

25.1.6.5 Employees shall be trained to operate fire-extinguishing equipment and shall be required to exhibit their skill when requested by the AHJ. [**102:**9.3.5]

25.1.7 Emergency Communications. One or more methods of fire alarm and emergency communications shall be provided to the satisfaction of the AHJ. [**102:**9.4]

25.1.8* Fire Detail. See 1.7.15 for fire detail requirements.

25.1.9 Electrical Installations.

25.1.9.1 Electrical installations shall conform to the requirements of Section 11.1.

Exception: As otherwise provided by law, ordinance, or regulation. [102:10.1.1]

25.1.9.2 The electrical system shall be installed, maintained, and operated in a safe and professional manner. If portable, it shall be inspected daily when in use by a qualified person representing the owner, and any defects found shall be corrected before the public is admitted. [**102:**10.1.2]

25.1.9.3 The electrical system and equipment shall be isolated from the public by proper elevation or guarding, and all electrical fuses and switches shall be enclosed in approved enclosures. Cables on the ground in areas traversed by the public shall be placed in trenches or protected by approved covers. [**102:**10.1.3]

25.1.10 Heating Devices.

25.1.10.1 Fired Heaters.

25.1.10.1.1 Only labeled heating devices shall be used. [**102:**10.2.1.1]

25.1.10.1.2 Fuel-fired heaters and their installation shall be approved by the AHJ. [**102:**10.2.1.2]

25.1.10.1.3 Ducts used to convey heated air shall comply with NFPA 90A, *Standard for the Installation of Air-Conditioning and Ventilating Systems.* [**102:**10.2.1.3]

25.1.10.1.4 Containers for liquefied petroleum gases shall be installed not less than 5 ft (1.5 m) from any tent or temporary membrane structure and shall be in accordance with the provisions of Chapter 69. [**102:**10.2.1.4]

25.1.10.1.5 Tanks shall be secured in the upright position and protected from vehicular traffic. [**102:**10.2.1.5]

25.1.10.1.6 Heating devices shall comply with Section 11.2 and Section 11.5.

25.1.10.2 Electric Heaters.

25.1.10.2.1 Electric heaters shall comply with 25.1.10.2 and Section 11.5.

25.1.10.2.2 Only labeled heaters shall be permitted. [**102:**10.2.2.1]

25.1.10.2.3 Heaters used inside a tent or temporary membrane structure shall be approved. [**102:**10.2.2.2]

25.1.10.2.4 Heaters shall be connected to electricity by electric cable suitable for outside use and of sufficient size to handle electrical load. [**102:**10.2.2.3]

25.1.11 Cooking. Cooking operations shall comply with Chapter 50.

25.1.12 Generators.

25.1.12.1 Generators and other internal combustion power sources shall be separated from temporary membrane structures and tents by a minimum of 5 ft (1.5 m) and shall be protected from contact by fencing, enclosure, or other approved means.

25.1.12.2 Fueling. Fuel tanks shall be of adequate capacity to permit uninterrupted operation during normal operating hours. Refueling shall be conducted only when not in use.

25.1.12.3 Fire Extinguishers. A minimum of one portable fire extinguisher with a rating of not less than 2-A:10-B:C shall be provided.

25.2 Tents.

25.2.1 General.

25.2.1.1 Tents shall be permitted only on a temporary basis. [***101:***11.11.1.2]

25.2.1.2 Tents shall be erected to cover not more than 75 percent of the premises, unless otherwise approved by the AHJ. [***101:***11.11.1.3]

25.2.2 Flame Propagation Performance.

25.2.2.1 All tent fabric shall meet the flame propagation performance criteria contained in NFPA 701, *Standard Methods of Fire Tests for Flame Propagation of Textiles and Films.* [***101:***11.11.2.1]

25.2.2.2 One of the following shall serve as evidence that the tent fabric materials have the required flame propagation performance:

(1) The AHJ shall require a certificate or other evidence of acceptance by an organization acceptable to the AHJ.
(2) The AHJ shall require a report of tests made by other inspection authorities or organizations acceptable to the AHJ. [***101:***11.11.2.2]

25.2.2.3 Where required by the AHJ, confirmatory field tests shall be conducted using test specimens from the original material, which shall have been affixed at the time of manufacture to the exterior of the tent. [***101:***11.11.2.3]

25.2.3 Location and Spacing.

25.2.3.1 There shall be a minimum of 10 ft (3050 mm) between stake lines. [***101:***11.11.3.1]

25.2.3.2 Adjacent tents shall be spaced to provide an area to be used as a means of emergency egress. Where 10 ft (3050 mm) between stake lines does not meet the requirements for means of egress, the distance necessary for means of egress shall govern. [***101:***11.11.3.2]

25.2.3.3 Tents not occupied by the public and not used for the storage of combustible material shall be permitted to be erected less than 10 ft (3050 mm) from other structures where the AHJ deems such close spacing to be safe from hazard to the public. [***101:***11.11.3.3]

25.2.3.4 Tents, each not exceeding 1200 ft^2 (112 m^2) in ground area and located in fairgrounds or similar open spaces, shall not be required to be separated from each other, provided that safety precautions meet the approval of the AHJ. [***101:***11.11.3.4]

25.2.3.5 The placement of tents relative to other structures shall be at the discretion of the AHJ, with consideration given to occupancy, use, opening, exposure, and other similar factors. [***101:***11.11.3.5]

25.2.4 Fire Hazards.

25.2.4.1 The ground enclosed by any tent, and the ground for a reasonable distance but for not less than 10 ft (3050 mm) outside of such a tent, shall be cleared of all flammable or combustible material or vegetation that is not used for necessary support equipment. The clearing work shall be accomplished to the satisfaction of the AHJ prior to the erection of such a tent. The premises shall be kept free from such flammable or combustible materials during the period for which the premises are used by the public. [***101:***11.11.4.1]

25.2.4.2 Where prohibited by the AHJ, smoking shall not be permitted in any tent. [*101*:11.11.4.2]

25.2.5 Fire-Extinguishing Equipment. Portable fire-extinguishing equipment of approved types shall be furnished and maintained in tents in such quantity and in such locations as directed by the AHJ. [*101*:11.11.5]

25.3 Grandstands.

25.3.1 General.

25.3.1.1 Where grandstand seating without backs is used indoors, rows of seats shall be spaced not less than 22 in. (560 mm) back-to-back. [*101*:12.4.8.2.1]

25.3.1.2 The depth of footboards and seat boards in grandstands shall be not less than 9 in. (230 mm); where the same level is not used for both seat foundations and footrests, footrests independent of seats shall be provided. [*101*:12.4.8.2.2]

25.3.1.3 Seats and footrests of grandstands shall be supported securely and fastened in such a manner that they cannot be displaced inadvertently. [*101*:12.4.8.2.3]

25.3.1.4 Individual seats or chairs shall be permitted only if secured in rows in an approved manner, unless seats do not exceed 16 in number and are located on level floors and within railed-in enclosures, such as boxes. [*101*:12.4.8.2.4]

25.3.1.5 The maximum number of seats permitted between the farthest seat in an aisle in grandstands and bleachers shall not exceed that shown in Table 25.3.1.5. [*101*:12.4.8.2.5]

Table 25.3.1.5 Maximum Number of Seats Between Farthest Seat and an Aisle

Application	Outdoors	Indoors
Grandstands	11	6
Bleachers [*See 12.2.5.6.1.2 of NFPA 101*]	20	9

[*101*:Table 12.4.8.2.5]

25.3.2 Special Requirements — Wood Grandstands.

25.3.2.1 An outdoor wood grandstand shall be erected within not less than two-thirds of its height and, in no case, within not less than 10 ft (3050 mm) of a building, unless otherwise permitted by the following:

(1) The distance requirement shall not apply to buildings of not less than 1-hour fire resistance–rated construction with openings protected against the fire exposure hazard created by the grandstand.
(2) The distance requirement shall not apply where a wall of not less than 1-hour fire resistance–rated construction separates the grandstand from the building. [*101*:12.4.8.3.1]

25.3.2.2 An outdoor wood grandstand unit shall not exceed 10,000 ft^2 (929 m^2) in ground area or 200 ft (61 m) in length, and the following requirements also shall apply:

(1) Grandstand units of the maximum size shall be placed not less than 20 ft (6100 mm) apart or shall be separated by walls of 1-hour fire resistance rating.
(2) The number of grandstand units erected in any one group shall not exceed three.
(3) Each group of grandstand units shall be separated from any other group by a wall of 2-hour fire resistance–rated construction extending 24 in. (610 mm) above the seat platforms or by an open space of not less than 50 ft (15 m). [*101*:12.4.8.3.2]

25.3.2.3 The ground area or length required by 25.3.2.2 shall be permitted to be doubled where one of the following criteria is met:

(1) Where the grandstand is constructed entirely of labeled fire-retardant-treated wood that has passed the standard rain test, ASTM D 2898, *Standard Test Methods for Accelerated Weathering of Fire-Retardant-Treated Wood for Fire Testing*
(2) Where the grandstand is constructed of members conforming to dimensions for heavy timber construction [Type IV (2HH)] [*101*:12.4.8.3.3]

25.3.2.4 The highest level of seat platforms above the ground or the surface at the front of any wood grandstand shall not exceed 20 ft (6100 mm). [*101*:12.4.8.3.4]

25.3.2.5 The highest level of seat platforms above the ground, or the surface at the front of a portable grandstand within a tent or membrane structure, shall not exceed 12 ft (3660 mm). [*101*:12.4.8.3.5]

25.3.2.6 The height requirements specified in 25.3.2.4 and 25.3.2.5 shall be permitted to be doubled where constructed entirely of labeled fire-retardant-treated wood that has passed the standard rain test, ASTM D 2898, or where constructed of members conforming to dimensions for heavy timber construction [Type IV (2HH)]. [*101*:12.4.8.3.6]

25.3.3 Special Requirements — Portable Grandstands.

25.3.3.1 Portable grandstands shall conform to the requirements of Section 25.3 for grandstands and the requirements of 25.3.3.2 through 25.3.3.7. [*101*:12.4.8.4.1]

25.3.3.2 Portable grandstands shall be self-contained and shall have within them all necessary parts to withstand and restrain all forces that might be developed during human occupancy. [*101*:12.4.8.4.2]

25.3.3.3 Portable grandstands shall be designed and manufactured so that, if any structural members essential to the strength and stability of the structure have been omitted during erection, the presence of unused connection fittings shall make the omissions self-evident. [*101*:12.4.8.4.3]

25.3.3.4 Portable grandstand construction shall be skillfully accomplished to produce the strength required by the design. [*101*:12.4.8.4.4]

25.3.3.5 Portable grandstands shall be provided with base plates, sills, floor runners, or sleepers of such area that the permitted bearing capacity of the supporting material is not exceeded. [*101*:12.4.8.4.5]

25.3.3.6 Where portable grandstands rest directly on a base of such character that it is incapable of supporting the load without appreciable settlement, mud sills of suitable material, having sufficient area to prevent undue or dangerous settlement, shall be installed under base plates, runners, or sleepers. [*101*:12.4.8.4.6]

25.3.3.7 All bearing surfaces of portable grandstands shall be in contact with each other. [*101*:12.4.8.4.7]

25.3.4 Spaces Underneath Grandstands. Spaces underneath a grandstand shall be kept free of flammable or combustible materials, unless protected by an approved, supervised automatic sprinkler system in accordance with Section 13.3 or unless otherwise permitted by the following:

(1) This requirement shall not apply to accessory uses of 300 ft^2 (28 m^2) or less, such as ticket booths, toilet facilities, or concession booths where constructed of noncombustible or fire-resistive construction in otherwise nonsprinklered facilities.
(2) This requirement shall not apply to rooms that are enclosed in not less than 1-hour fire resistance–rated construction and are less than 1000 ft^2 (93 m^2) in otherwise nonsprinklered facilities. [*101*:12.4.8.5]

25.3.5 Guards and Railings.

25.3.5.1 Railings or guards not less than 42 in. (1065 mm) above the aisle surface or footrest or not less than 36 in. (915 mm) vertically above the center of the seat or seat board surface, whichever is adjacent, shall be provided along those portions of the backs and ends of all grandstands where the seats are more than 48 in. (1220 mm) above the floor or ground. [*101*:12.4.8.6.1]

25.3.5.2 The requirement of 25.3.5.1 shall not apply where an adjacent wall or fence affords equivalent safeguard. [*101*:12.4.8.6.2]

25.3.5.3 Where the front footrest of any grandstand is more than 24 in. (610 mm) above the floor, railings or guards not less than 33 in. (825 mm) above such footrests shall be provided. [*101*:12.4.8.6.3]

25.3.5.4 The railings required by 25.3.5.3 shall be permitted to be not less than 26 in. (660 mm) high in grandstands or where the front row of seats includes backrests. [*101*:12.4.8.6.4]

25.3.5.5 Cross aisles located within the seating area shall be provided with rails not less than 26 in. (660 mm) high along the front edge of the cross aisle. [*101*:12.4.8.6.5]

25.3.5.6 The railings specified by 25.3.5.5 shall not be required where the backs of the seats in front of the cross aisle project 24 in. (610 mm) or more above the surface of the cross aisle. [*101*:12.4.8.6.6]

25.3.5.7 Vertical openings between guardrails and footboards or seat boards shall be provided with intermediate construction so that a 4 in. (100 mm) diameter sphere cannot pass through the opening. [*101*:12.4.8.6.7]

25.3.5.8 An opening between the seat board and footboard located more than 30 in. (760 mm) above grade shall be provided with intermediate construction so that a 4 in. (100 mm) diameter sphere cannot pass through the opening. [*101*:12.4.8.6.8]

25.3.6 Maintenance of Outdoor Grandstands.

25.3.6.1 The owner shall provide for not less than annual inspection and required maintenance of each outdoor grandstand to ensure safe conditions. [*101*:12.7.10.1]

25.3.6.2 At least biennially, the inspection shall be performed by a professional engineer, registered architect, or individual certified by the manufacturer. [*101*:12.7.10.2]

25.3.6.3 Where required by the AHJ, the owner shall provide a copy of the inspection report and certification that the inspection required by 25.3.6.2 has been performed. [*101*:12.7.10.3]

25.4 Folding and Telescopic Seating.

25.4.1 Seating.

25.4.1.1 The horizontal distance of seats, measured back-to-back, shall be not less than 22 in. (560 mm) for seats without backs, and the following requirements shall also apply:

(1) There shall be a space of not less than 12 in. (305 mm) between the back of each seat and the front of each seat immediately behind it.
(2) If seats are of the chair type, the 12 in. (305 mm) dimension shall be measured to the front edge of the rear seat in its normal unoccupied position.
(3) All measurements shall be taken between plumb lines. [*101*:12.4.9.2.1]

25.4.1.2 The depth of footboards (footrests) and seat boards in folding and telescopic seating shall be not less than 9 in. (230 mm). [*101*:12.4.9.2.2]

25.4.1.3 Where the same level is not used for both seat foundations and footrests, footrests independent of seats shall be provided. [*101*:12.4.9.2.3]

25.4.1.4 Individual chair-type seats shall be permitted in folding and telescopic seating only if firmly secured in groups of not less than three. [*101*:12.4.9.2.4]

25.4.1.5 The maximum number of seats permitted between the farthest seat in an aisle in folding and telescopic seating shall not exceed that shown in Table 25.3.1.5. [*101*:12.4.9.2.5]

25.4.2 Guards and Railings.

25.4.2.1 Railings or guards not less than 42 in. (1065 mm) above the aisle surface or footrest or not less than 36 in. (915 mm) vertically above the center of the seat or seat board surface, whichever is adjacent, shall be provided along those portions of the backs and ends of all folding and telescopic seating where the seats are more than 48 in. (1220 mm) above the floor or ground. [*101*:12.4.9.3.1]

25.4.2.2 The requirement of 25.4.2.1 shall not apply where an adjacent wall or fence affords equivalent safeguard. [*101*:12.4.9.3.2]

25.4.2.3 Where the front footrest of folding or telescopic seating is more than 24 in. (610 mm) above the floor, railings or guards not less than 33 in. (825 mm) above such footrests shall be provided. [*101*:12.4.9.3.3]

25.4.2.4 The railings required by 25.4.2.3 shall be permitted to be not less than 26 in. (660 mm) high where the front row of seats includes backrests. [*101*:12.4.9.3.4]

25.4.2.5 Cross aisles located within the seating area shall be provided with rails not less than 26 in. (660 mm) high along the front edge of the cross aisle. [*101*:12.4.9.3.5]

25.4.2.6 The railings specified by 25.4.2.5 shall not be required where the backs of the seats in front of the cross aisle project 24 in. (610 mm) or more above the surface of the cross aisle. [*101*:12.4.9.3.6]

25.4.2.7 Vertical openings between guardrails and footboards or seat boards shall be provided with intermediate construction so that a 4 in. (100 mm) diameter sphere cannot pass through the opening. [*101*:12.4.9.3.7]

25.4.2.8 An opening between the seat board and footboard located more than 30 in. (760 mm) above grade shall be provided with intermediate construction so that a 4 in. (100 mm) diameter sphere cannot pass through the opening. [*101*:12.4.9.3.8]

25.4.3 Maintenance and Operation of Folding and Telescopic Seating.

25.4.3.1 Instructions in both maintenance and operation shall be transmitted to the owner by the manufacturer of the seating or his or her representative. [*101*:12.7.11.1]

25.4.3.2 Maintenance and operation of folding and telescopic seating shall be the responsibility of the owner or his or her duly authorized representative and shall include the following:

(1) During operation of the folding and telescopic seats, the opening and closing shall be supervised by responsible personnel who shall ensure that the operation is in accordance with the manufacturer's instructions.
(2) Only attachments specifically approved by the manufacturer for the specific installation shall be attached to the seating.
(3) An annual inspection and required maintenance of each grandstand shall be performed to ensure safe conditions.
(4) At least biennially, the inspection shall be performed by a professional engineer, registered architect, or individual certified by the manufacturer. [*101*:12.7.11.2]

25.5 Permanent Membrane Structures.

25.5.1 Application.

25.5.1.1 Use of Membrane Roofs. Membrane roofs shall be used in accordance with the following:

(1) Membrane materials shall not be used where fire resistance ratings are required for walls or roofs.
(2) Where every part of the roof, including the roof membrane, is not less than 20 ft (6100 mm) above any floor, balcony, or gallery, a noncombustible or limited-combustible membrane shall be permitted to be used as the roof in any type of construction.
(3) With approval of the AHJ, membrane materials shall be permitted to be used where every part of the roof membrane is sufficiently above every significant fire potential such that the imposed temperature cannot exceed the capability of the membrane, including seams, to maintain its structural integrity. [*101*:11.9.1.2]

25.5.1.2 Testing. Testing of membrane materials for compliance with the requirements of Section 25.5 for use of the categories of noncombustible and limited-combustible materials shall be performed on weathered-membrane material as defined in Section 3.3 of NFPA *101*. [*101*:11.9.1.3]

25.5.1.3 Flame Spread Index. The flame spread index of all membrane materials exposed within the structure shall be Class A in accordance with Section 10.2 of NFPA *101*. [*101*:11.9.1.4]

25.5.1.4 Roof Covering Classification. Roof membranes shall have a roof covering classification, as required by the applicable building codes, when tested in accordance with NFPA 256, *Standard Methods of Fire Tests of Roof Coverings*; ASTM E 108, *Standard Test Methods for Fire Tests of Roof Coverings*; or UL 790, *Test Methods for Fire Tests of Roof Coverings*. [*101*:11.9.1.5]

25.5.1.5 Flame Propagation Performance.

25.5.1.5.1 All membrane structure fabric shall meet the flame propagation performance criteria contained in NFPA 701, *Standard Methods of Fire Tests for Flame Propagation of Textiles and Films*. [*101*:11.9.1.6.1]

25.5.1.5.2 One of the following shall serve as evidence that the fabric materials have the required flame propagation performance:

(1) The AHJ shall require a certificate or other evidence of acceptance by an organization acceptable to the AHJ.
(2) The AHJ shall require a report of tests made by other inspection authorities or organizations acceptable to the AHJ. [*101*:11.9.1.6.2]

25.5.1.5.3 Where required by the AHJ, confirmatory field tests shall be conducted using test specimens from the original material, which shall have been affixed at the time of manufacture to the exterior of the structure. [*101*:11.9.1.6.3]

25.5.2 Tensioned-Membrane Structures.

25.5.2.1 The design, materials, and construction of the building shall be based on plans and specifications prepared by a licensed architect or engineer knowledgeable in tensioned-membrane construction. [*101*:11.9.2.1]

25.5.2.2 Material loads and strength shall be based on physical properties of the materials verified and certified by an approved testing laboratory. [*101*:11.9.2.2]

25.5.2.3 The membrane roof for structures in climates subject to freezing temperatures and ice buildup shall be composed of two layers separated by an air space through which heated air can be moved to guard against ice accumulation. As an alternative to the two layers, other approved methods that protect against ice accumulation shall be permitted. [*101*:11.9.2.3]

25.5.2.4 Roof drains shall be equipped with electrical elements to protect against ice buildup that can prevent the drains from functioning. Such heating elements shall be served by on-site standby electrical power in addition to the normal public service. As an alternative to such electrical elements, other approved methods that protect against ice accumulation shall be permitted. [*101*:11.9.2.4]

25.5.3 Air-Supported and Air-Inflated Structures.

25.5.3.1 General. In addition to the general provisions of 25.5.1, the requirements of 25.5.3 shall apply to air-supported and air-inflated structures. [*101*:11.9.3.1]

25.5.3.2 Pressurization (Inflation) System. The pressurization system shall consist of one or more operating blower units. The system shall include automatic control of auxiliary blower units to maintain the required operating pressure. Such equipment shall meet the following requirements:

(1) Blowers shall be powered by continuous-rated motors at the maximum power required.
(2) Blowers shall have personnel protection, such as inlet screens and belt guards.
(3) Blower systems shall be weather protected.
(4) Blower systems shall be equipped with backdraft check dampers.
(5) Not less than two blower units shall be provided, each of which has capacity to maintain full inflation pressure with normal leakage.

(6) The blowers shall be designed to be incapable of overpressurization.
(7) The auxiliary blower unit(s) shall operate automatically if there is any loss of internal pressure or if an operating blower unit becomes inoperative.
(8) The design inflation pressure and the capacity of each blower system shall be certified by a professional engineer. [*101*:11.9.3.2]

25.5.3.3 Standby Power System.

25.5.3.3.1* A fully automatic standby power system shall be provided. The system shall be either an auxiliary engine generator set capable of running the blower system or a supplementary blower unit that is sized for 1 times the normal operating capacity and is powered by an internal combustion engine. [*101*:11.9.3.3.1]

25.5.3.3.2 The standby power system shall be fully automatic to ensure continuous inflation in the event of any failure of the primary power. The system shall be capable of operating continuously for a minimum of 4 hours. [*101*:11.9.3.3.2]

25.5.3.3.3 The sizing and capacity of the standby power system shall be certified by a professional engineer. [*101*:11.9.3.3.3]

25.5.4 Maintenance and Operation.

25.5.4.1 Instructions in both operation and maintenance shall be transmitted to the owner by the manufacturer of the tensioned-membrane, air-supported, or air-inflated structure. [*101*:11.9.4.1]

25.5.4.2 Annual inspection and required maintenance of each structure shall be performed to ensure safety conditions. At least biennially, the inspection shall be performed by a professional engineer, registered architect, or individual certified by the manufacturer. [*101*:11.9.4.2]

25.6 Temporary Membrane Structures.

25.6.1 Application.

25.6.1.1 Required Approval. Membrane structures designed to meet all the requirements of Section 25.6 shall be permitted to be used as temporary buildings subject to the approval of the AHJ. [*101*:11.10.1.2]

25.6.1.2 Alternative Requirements. Temporary tensioned-membrane structures shall be permitted to comply with Section 25.2 instead of Section 25.6. [*101*:11.10.1.3]

25.6.1.3 Roof Covering Classification. Roof membranes shall have a roof covering classification, as required by the applicable building codes, when tested in accordance with NFPA 256, ASTM E 108, or UL 790. [*101*:11.10.1.4]

25.6.1.4 Flame Propagation Performance.

25.6.1.4.1 All membrane structure fabric shall meet the flame propagation performance criteria contained in NFPA 701. [*101*:11.10.1.5.1]

25.6.1.4.2 One of the following shall serve as evidence that the fabric materials have the required flame propagation performance:

(1) The AHJ shall require a certificate or other evidence of acceptance by an organization acceptable to the AHJ.
(2) The AHJ shall require a report of tests made by other inspection authorities or organizations acceptable to the AHJ. [*101*:11.10.1.5.2]

25.6.1.4.3 Where required by the AHJ, confirmatory field tests shall be conducted using test specimens from the original material, which shall have been affixed at the time of manufacture to the exterior of the structure. [*101*:11.10.1.5.3]

25.6.2 Fire Hazards.

25.6.2.1 The ground enclosed by any temporary membrane structure, and the ground for a reasonable distance but for not less than 10 ft (3050 mm) outside of such a structure, shall be cleared of all flammable or combustible material or vegetation that is not used for necessary support equipment. The clearing work shall be accomplished to the satisfaction of the AHJ prior to the erection of such a structure. The premises shall be kept free from such flammable or combustible materials during the period for which the premises are used by the public. [*101*:11.10.2.1]

25.6.2.2 Where prohibited by the AHJ, smoking shall not be permitted in any temporary membrane structure. [*101*:11.10.2.2]

25.6.3 Fire-Extinguishing Equipment. Portable fire-extinguishing equipment of approved types shall be furnished and maintained in temporary membrane structures in such quantity and in such locations as directed by the AHJ. [*101*:11.10.3]

25.6.4 Tensioned-Membrane Structures.

25.6.4.1 The design, materials, and construction of the building shall be based on plans and specifications prepared by a licensed architect or engineer knowledgeable in tensioned-membrane construction. [*101*:11.10.4.1]

25.6.4.2 Material loads and strength shall be based on physical properties of the materials verified and certified by an approved testing laboratory. [*101*:11.10.4.2]

25.6.4.3 The membrane roof for structures in climates subject to freezing temperatures and ice buildup shall be composed of two layers separated by an air space through which heated air can be moved to guard against ice accumulation. As an alternative to the two layers, other approved methods that protect against ice accumulation shall be permitted. [*101*:11.10.4.3]

25.6.4.4 Roof drains shall be equipped with electrical elements to protect against ice buildup that can prevent the drains from functioning. Such heating elements shall be served by on-site standby electrical power in addition to the normal public service. As an alternative to such electrical elements, other approved methods that protect against ice accumulation shall be permitted. [*101*:11.10.4.4]

25.6.5 Air-Supported and Air-Inflated Structures.

25.6.5.1 General. In addition to the general provisions of 25.6.1, the requirements of 25.6.5 shall apply to air-supported and air-inflated structures. [*101*:11.10.5.1]

25.6.5.2 Pressurization (Inflation) System. The pressurization system shall consist of one or more operating blower units. The system shall include automatic control of auxiliary blower units to maintain the required operating pressure. Such equipment shall meet the following requirements:

(1) Blowers shall be powered by continuous-rated motors at the maximum power required.
(2) Blowers shall have personnel protection, such as inlet screens and belt guards.
(3) Blower systems shall be weather protected.

(4) Blower systems shall be equipped with backdraft check dampers.
(5) Not less than two blower units shall be provided, each of which has capacity to maintain full inflation pressure with normal leakage.
(6) The blowers shall be designed to be incapable of overpressurization.
(7) The auxiliary blower unit(s) shall operate automatically if there is any loss of internal pressure or if an operating blower unit becomes inoperative.
(8) The design inflation pressure and the capacity of each blower system shall be certified by a professional engineer. [*101*:11.10.5.2]

25.6.5.3 Standby Power System.

25.6.5.3.1 A fully automatic standby power system shall be provided. The system shall be either an auxiliary engine generator set capable of running the blower system or a supplementary blower unit that is sized for 1 times the normal operating capacity and is powered by an internal combustion engine. [*101*:11.10.5.3.1]

25.6.5.3.2 The standby power system shall be fully automatic to ensure continuous inflation in the event of any failure of the primary power. The system shall be capable of operating continuously for a minimum of 4 hours. [*101*:11.10.5.3.2]

25.6.5.3.3 The sizing and capacity of the standby power system shall be certified by a professional engineer. [*101*:11.10.5.3.3]

25.6.6 Maintenance and Operation.

25.6.6.1 Instructions in both operation and maintenance shall be transmitted to the owner by the manufacturer of the tensioned-membrane, air-supported, or air-inflated structure. [*101*:11.10.6.1]

25.6.6.2 Annual inspection and required maintenance of each structure shall be performed to ensure safety conditions. At least biennially, the inspection shall be performed by a professional engineer, registered architect, or individual certified by the manufacturer. [*101*:11.10.6.2]

Chapter 26 Laboratories Using Chemicals

26.1 General.

26.1.1 The handling or storage of chemicals in laboratory buildings, laboratory units, and laboratory work areas whether located above or below grade shall comply with Chapter 26 and NFPA 45, *Standard on Fire Protection for Laboratories Using Chemicals.*

26.1.2 Chapter 26 shall apply to laboratory buildings, laboratory units, and laboratory work areas whether located above or below grade in which chemicals, as defined, are handled or stored. [**45**:1.1.1]

26.1.3 Chapter 26 shall not apply to the following:

(1)*If conditions (a) and (b) exist, Chapter 26 shall not apply:
  (a) Laboratory units that contain less than or equal to 1 gal (4 L) of flammable or combustible liquid
  (b) Laboratory units that contain less than 75 scf (2.2 standard m^3) of flammable gas, not including piped-in low-pressure utility gas installed in accordance with NFPA 54, *National Fuel Gas Code*
(2) Laboratories that are pilot plants
(3) Laboratories that handle only chemicals with a hazard rating of zero or one, as defined by NFPA 704, *Standard System for the Identification of the Hazards of Materials for Emergency Response,* for all of the following: health, flammability, and instability
(4) Laboratories that are primarily manufacturing plants
(5) Incidental testing facilities
(6) Physical, electronic, instrument, laser, or similar laboratories that use chemicals only for incidental purposes, such as cleaning
(7) Laboratories that work only with radioactive materials, as covered by NFPA 801, *Standard for Fire Protection for Facilities Handling Radioactive Materials*
(8) Laboratories that work only with explosive material, as covered by NFPA 495, *Explosive Materials Code* [**45**:1.1.2]

26.1.4 Chapter 26 contains requirements, but not all-inclusive requirements, for handling and storage of chemicals where laboratory-scale operations are conducted and shall not cover the following:

(1) The special fire protection required when handling explosive materials *(See NFPA 495.)*
(2) The special fire protection required when handling radioactive materials [**45**:1.1.3]

26.2* Laboratories in Health Care Occupancies. Any building, space, room, or group of rooms in a health care facility intended to serve activities involving procedures for investigation, diagnosis, or treatment in which flammable, combustible, or oxidizing materials are to be used shall comply with Section 26.1 of this *Code* and Chapter 11 of NFPA 99, *Standard for Health Care Facilities.*

26.3 Permits. Permits, where required, shall comply with Section 1.12.

Chapter 27 Manufactured Home and Recreational Vehicle Sites

27.1 Manufactured Home Sites.

27.1.1 The fire safety requirements for the installation of manufactured homes and manufactured home sites, including accessory buildings, structures, and communities, shall comply with NFPA 501A, *Standard for Fire Safety Criteria for Manufactured Home Installations, Sites, and Communities,* and Section 27.1.

27.1.2 Section 27.1 shall not apply to recreational vehicles as defined in NFPA 1192, *Standard on Recreational Vehicles,* or to park trailers as defined in RVIA/ANSI A.119.5, *Standard for Park Trailers.*

27.2 Recreational Vehicle Parks and Campgrounds.

27.2.1 The construction of recreational vehicle parks and campgrounds that offer temporary living sites for use by recreational vehicles and camping units shall comply with Section 27.2 and NFPA 1194, *Standard for Recreational Vehicle Parks and Campgrounds.*

27.2.2 Section 27.2 shall not cover the design of recreational vehicles or other forms of camping units or the operational and maintenance practices of recreational vehicle parks and campgrounds.

Chapter 28 Marinas, Boatyards, Marine Terminals, Piers, and Wharves

28.1 Marinas, Boatyards, and Other Recreational Marine Facilities.

28.1.1 The construction and operation of marinas, boatyards, yacht clubs, boat condominiums, docking facilities associated with residential condominiums, multiple-docking facilities at multiple-family residences, and all associated piers, docks, and floats shall comply with NFPA 303, *Fire Protection Standard for Marinas and Boatyards*, and Section 28.1.

28.1.2 Section 28.1 shall not apply to private, non-commercial docking facility constructed or occupied for the use of the owners or residents of the associated single-family dwellings.

28.1.3 Section 28.1 shall apply to support facilities and structures used for construction, repair, storage, hauling and launching, or fueling of vessels if fire on a pier would pose an immediate threat to these facilities, or if a fire at a referenced facility would pose an immediate threat to a docking facility. [**303:**1.1.1]

28.1.4 Section 28.1 applies to marinas and facilities servicing small recreational and commercial craft, yachts, and other craft of not more than 300 gross tons. [**303:**1.1.2]

28.1.5 No requirement in this chapter shall be construed as reducing applicable building, fire, and electrical codes. [**303:**1.1.4]

28.1.6 Fire Protection.

28.1.6.1 Portable Fire Extinguishers.

28.1.6.1.1 Placement.

28.1.6.1.1.1 Placement of portable fire extinguishers shall be in accordance with Chapter 5 of NFPA 10 unless otherwise permitted by 28.1.6.1.1.1.2(A), 28.1.6.1.1.1.2(B) and 28.1.6.1.1.1.3. [**303:**6.2.1.1]

28.1.6.1.1.1.1 Placement of portable fire extinguishers on piers and along bulkheads where vessels are moored or are permitted to be moored shall meet the following criteria:

(1) Extinguishers listed for Class A, Class B, and Class C fires shall be installed at the pier/land intersection on a pier that exceeds 25 ft (7.62 m) in length.
(2) Additional fire extinguishers shall be placed such that the maximum travel distance to an extinguisher does not exceed 75 ft (22.86 m). [**303:**6.2.1.1.1]

28.1.6.1.1.1.2 Fuel-Dispensing Areas.

(A) Portable fire extinguishers that meet the minimum requirements of 13.6.3 of NFPA 10 for extra (high) hazard type shall be installed on two sides of a fuel-dispensing area. [**303:**6.2.1.1.2.1]

(B) On piers or bulkheads where long fueling hoses are installed for fueling vessels, additional extinguishers installed on piers or bulkheads shall meet the requirements of 13.6.3 of NFPA 10 for extra (high) hazard type and 28.1.6.1.1.1. [**303:**6.2.1.1.2.2]

28.1.6.1.1.1.3 All extinguishers installed on piers shall meet the rating requirements set forth in 13.6.3 of NFPA 10 for ordinary (moderate) hazard type. [**303:**6.2.1.1.3]

28.1.6.1.2 Maintenance. All portable fire extinguishers shall be maintained in accordance with 13.6.6.8 of NFPA 10 and shall be clearly visible and marked. [**303:**6.2.2]

28.1.6.2 Fixed Fire-Extinguishing Systems.

28.1.6.2.1 Buildings on Piers.

28.1.6.2.1.1 Buildings in excess of 500 ft^2 (46 m^2) that are constructed on piers shall be protected by an approved automatic fire-extinguishing system unless otherwise permitted by 28.1.6.2.1.2 or 28.1.6.2.1.3. [**303:**6.3.1.1]

28.1.6.2.1.2 Buildings of Type I or Type II construction, as specified in Section 4.3 of NFPA 220, *Standard on Types of Building Construction*, and without combustible contents shall not be required to be protected by an automatic fire-extinguishing system. [**303:**6.3.1.2]

28.1.6.2.1.3* Existing facilities shall not be required to be protected by an automatic fire-extinguishing system where acceptable to the AHJ. [**303:**6.3.1.3]

28.1.6.2.2* Buildings Exceeding 5000 ft^2 (465 m^2).

28.1.6.2.2.1 Marina and boatyard buildings in excess of 5000 ft^2 (465 m^2) in total area shall be protected by an approved automatic fire-extinguishing system unless otherwise permitted by 28.1.6.2.2.2. [**303:**6.3.2.1]

28.1.6.2.2.2* Existing facilities shall not be required to be protected by an automatic fire-extinguishing system where acceptable to the AHJ. [**303:**6.3.2.2]

28.1.6.2.3 Combustible Piers and Substructures.

28.1.6.2.3.1 Combustible piers and substructures in excess of 25 ft (7.62 m) in width or in excess of 5000 ft^2 (465 m^2) in area, or within 30 ft (9.14 m) of other structures or superstructures required to be so protected, shall be protected in accordance with Section 4.3 of NFPA 307, *Standard for the Construction and Fire Protection of Marine Terminals, Piers, and Wharves*, unless otherwise permitted by 28.1.6.2.3.2, 28.1.6.2.3.3, or 28.1.6.2.3.4. [**303:**6.3.3.1]

28.1.6.2.3.2 Fixed piers shall not be required to be protected as specified in 28.1.6.2.3.1 where the vertical distance from the surface of mean high water level to the underside of the pier surface does not exceed 36 in. (914 mm). [**303:**6.3.3.2]

28.1.6.2.3.3 Floating piers shall not be required to be protected as specified in 28.1.6.2.3.1 where the vertical distance from the surface of the water to the underside of the pier surface does not exceed 36 in. (914 mm). [**303:**6.3.3.3]

28.1.6.2.3.4* Existing facilities shall not be required to be protected by an automatic fire-extinguishing system where acceptable to the AHJ. [**303:**6.3.3.4]

28.1.6.2.4* An approved water supply shall be provided within 100 ft (30 m) of the pier/land intersection or fire department connection serving fire protection systems. [**303:**6.3.5]

28.1.6.2.5 Access between water supplies and pier/land intersections or fire department connections shall be by roadway acceptable to the AHJ. [**303:**6.3.6]

28.1.6.3 Fire Standpipe Systems.

28.1.6.3.1 Class I standpipe systems shall be provided for piers, bulkheads, and buildings where the hose lay distance from the fire apparatus exceeds 150 ft (45 m). [**303:**6.4.1]

28.1.6.3.2 Standpipe systems, where installed, shall be in accordance with 13.2, except for the provisions identified in 28.1.6.3.3 through 28.1.6.3.6. [**303:**6.4.2]

28.1.6.3.3 Hose racks, hoses, and standpipe cabinets shall not be required on piers and bulkheads. [**303:**6.4.3]

28.1.6.3.4 Supply piping for standpipes on piers and bulkheads shall be sized for the minimum flow rate for Class II systems. [**303:**6.4.4]

28.1.6.3.5 Manual dry standpipes shall be permitted. [**303:**6.4.5]

28.1.6.3.6 Flexible connections shall be permitted on floating piers where acceptable to the AHJ. [**303:**6.4.6]

28.1.6.4 Hydrants and Water Supplies. Hydrants and water supplies for fire protection in marinas and boatyards shall be provided in accordance with 13.2, 13.3, and 13.5.1. [**303:**6.6]

28.1.6.5 Fire Detectors.

28.1.6.5.1 Fire detection devices and installation shall be in accordance with Section 13.7. [**303:**6.11.1]

28.1.6.5.2 Fire detectors shall be installed in the following interior or covered locations unless those locations are protected by a fixed automatic sprinkler system installed in accordance with NFPA 13:

(1) Rooms containing combustible storage or goods
(2) Rooms containing flammable liquid storage or use
(3) Rooms containing battery storage or maintenance
(4) Rooms containing paint and solvent storage or use
(5) Areas used for enclosed or covered storage of vessels
(6) Areas used for enclosed or covered maintenance of vessels
(7) Areas used for public assembly, dining, or lodging
(8) Kitchens and food preparation areas
(9) Dust bins and collectors
(10) Inside trash storage areas
(11) Rooms used for storing janitor supplies or linens
(12) Laundry rooms
(13) Furnace rooms [**303:**6.11.2]

28.1.7 Wet Storage and Berthing.

28.1.7.1 Each berth shall be arranged such that a boat occupying the berth can be removed in an emergency without the necessity of moving other boats. [**303:**7.1.1]

28.1.7.2 Access to all piers, floats, and wharves shall be provided for municipal fire-fighting equipment. [**303:**7.1.2]

28.1.7.3* Electrical lighting shall be provided to ensure adequate illumination of all exterior areas, piers, and floats. [**303:**7.1.3]

28.1.7.4 Electrical lighting shall not interfere with navigation or aids to navigation. [**303:**7.1.4]

28.1.7.5 Only listed 120/240 V ac electrical equipment shall be operated unattended. [**303:**7.1.5]

28.1.8 Dry Storage.

28.1.8.1 General.

28.1.8.1.1 Heaters.

28.1.8.1.1.1 The use of portable heaters in boat storage areas shall be prohibited except where necessary to accomplish repairs. [**303:**7.2.1.1.1]

28.1.8.1.1.2 Portable heaters used in accordance with 28.1.8.1.1.1 shall be used only when personnel are in attendance. [**303:**7.2.1.1.2]

28.1.8.1.1.3 Open flame heaters shall not be used in boat storage areas. [**303:**7.2.1.1.3]

28.1.8.1.2 Ladders long enough to reach the deck of any stored boat shall be provided and readily available. [**303:**7.2.1.2]

28.1.8.1.3 The use of blow torches or flammable paint remover shall be prohibited unless permitted by 8.6.1 of NFPA 303. [**303:**7.2.1.3].

28.1.8.1.4 The use of gasoline or other flammable solvents for cleaning purposes shall be prohibited. [**303:**7.2.1.4]

28.1.8.1.5 Where a boat is to be dry-stored for the season or stored indoors for an extended period of time, such as while awaiting repairs, the following precautions shall be taken:

(1) The vessel shall be inspected for any hazardous materials or conditions that could exist, and corrective action shall be taken.
(2) Liquefied petroleum gas (LPG) and compressed natural gas (CNG) cylinders, reserve supplies of stove alcohol or kerosene, and charcoal shall be removed from the premises or stored in a separate, designated safe area.
(3) All portable fuel tanks shall be removed from the premises or emptied and, if emptied, the cap shall be removed and the tank left open to the atmosphere.
(4) Permanently installed fuel tanks shall be stored at least 95 percent full. [**303:**7.2.1.5]

28.1.8.1.6 No unattended electrical equipment shall be in use aboard boats. [**303:**7.2.1.6]

28.1.8.1.7 All storage areas shall be routinely raked, swept, or otherwise policed to prevent the accumulation of rubbish. [**303:**7.2.1.7]

28.1.8.1.8 Fire Department Access.

28.1.8.1.8.1 Access to boats stored outside shall be such that the hose-lay distance from the fire apparatus to any portion of the boat shall not exceed 150 ft (45 m). [**303:**7.2.1.8.1]

28.1.8.1.8.2 Access to buildings in which boats are stored shall be such that the hose-lay distance from the fire apparatus to all exterior portions of the building shall not exceed 150 ft (45 m). [**303:**7.2.1.8.2]

28.1.8.1.8.3 Wet standpipe systems shall be permitted to be used to meet the requirement in 28.1.8.1.1 or 28.1.8.1.2. [**303:**7.2.1.8.3]

28.1.8.2 Indoors.

28.1.8.2.1 When work is being carried out onboard a vessel in an unsprinklered storage building, management shall require an inspection of the vessel at the end of the day to ensure that no hazards resulting from the day's work are present. [**303:**7.2.2.1]

28.1.8.2.2 If a guard is employed, vessels addressed in 28.1.8.2.1 shall be included in the regular rounds. [**303:**7.2.2.2]

28.1.8.2.3 Class I flammable liquids shall not be stored in an indoor boat storage area. [**303:**7.2.2.3]

28.1.8.2.4 Work performed on boats stored indoors shall be performed by qualified personnel. [**303:**7.2.2.4]

28.1.8.2.5 Facility management shall maintain control over all personnel access to storage facilities and boats stored indoors. [**303**:7.2.2.5]

28.1.8.3 In-Out Dry Storage and Rack Storage.

28.1.8.3.1 Water supply and hose, or portable fire extinguishers and wheeled cart assemblies equipped with discharge nozzles capable of reaching all boats on the highest racks shall be provided. [**303**:6.5]

28.1.8.3.2 Where boats are stored either inside or outside in single- or multiple-level racks, those boats shall have unimpeded vehicular access at one end, and equipment shall be available to remove any stored boat. [**303**:7.2.3.1]

28.1.8.3.3 Where boats are stored in multilevel racks, either inside or outside, for seasonal storage or for in-out operation, the following precautions shall be taken:

(1) Drain plugs shall be removed (in sprinklered buildings).
(2) Batteries shall be disconnected or the master battery switch turned off.
(3) Fuel tank valves shall be closed.
(4) For seasonal storage, the requirements of 28.1.8.1 shall apply. [**303**:7.2.3.2]

28.1.8.3.4 Repairs to boats that are on racks or that are inside an in-out dry storage building shall be prohibited. [**303**:7.2.3.3]

28.1.8.3.5 Portable power lines, such as drop cords, shall be prohibited from use on boats in an in-out dry storage building. [**303**:7.2.3.4]

28.1.8.3.6 The charging of batteries shall be prohibited in the in-out dry storage building. [**303**:7.2.3.5]

28.1.8.4* Battery Storage. Where the removal of batteries for storage or charging due to size and weight is impractical, batteries shall be permitted to remain onboard, provided the following conditions are met:

(1) The battery compartment is arranged to provide adequate ventilation.
(2) A listed battery charger is used to provide a suitable charge.
(3) The power connection to the charger consists of a three-wire cord of not less than No. 14 AWG conductors connected to a source of 110 V to 125 V single-phase current, with a control switch and approved circuit protection device designed to trip at not more than 125 percent of the rated amperage of the charger.
(4) There is no connection on the load side of the charger to any other device except the battery, and the boat battery switch is turned off.
(5) The battery is properly connected to the charger, and the grounding conductor effectively grounds the charger enclosure.
(6) Unattended battery chargers are checked at intervals not exceeding 8 hours while in operation. [**303**:7.2.4]

28.1.9* Conditions on Individual Boats.

28.1.9.1 The management shall have an inspection made of each boat received for major repair or storage as soon as practicable after arrival of a boat and before commencement of any work aboard. [**303**:8.1.1]

28.1.9.2 The inspection required in 28.1.9.1 shall include the following determinations:

(1) Presence of combustible vapors in any compartment
(2) General maintenance and cleanliness, and location of any combustible materials that require removal or protection for the safe accomplishment of the particular work involved
(3) Quantity, type, and apparent condition of fire-extinguishing equipment onboard
(4) Listed appropriate shore power inlet(s) and ship-to-shore cable(s), when present [**303**:8.1.2]

28.1.9.3 The management shall, as a condition to accepting a boat received for major repair or storage, require the owner to correct any inadequacies found in 28.1.9.2 or to authorize management to do so. [**303**:8.1.3]

28.1.9.4 General Precautions.

28.1.9.4.1 Smoking in the working area shall be prohibited. [**303**:8.1.4.1]

28.1.9.4.2 Loose combustibles in the area of any hazardous work shall be removed. [**303**:8.1.4.2]

28.1.9.4.3 Unprotected battery terminals shall be covered to prevent inadvertent shorting from dropped tools or otherwise, and the ungrounded battery lead shall be disconnected. [**303**:8.1.4.3]

28.1.9.4.4 Personnel employed in the removal or installation of storage batteries shall be qualified. [**303**:8.1.4.4]

28.1.9.4.5 Where electric service is provided to boats in storage, the receptacle providing the power shall be protected with a ground-fault circuit-interrupter. [**303**:8.1.4.5]

28.1.9.5 The marina or boatyard operator shall post in a prominent location, or provide to boat operators using a marina or boatyard for mooring, repair, servicing, or storage, a list of safe operating procedures containing at least the following information:

(1) A prohibition against the use of any form of hibachis, charcoal, wood, or gas-type portable cooking equipment, except in specifically authorized areas that are not on the docks, on boats in the berthing area, or near flammables
(2) Procedures for disposal of trash
(3) Designation of nonsmoking areas
(4) Location of fire extinguishers and hoses
(5) Procedures for turning in a fire alarm
(6) Fueling procedures [**303**:8.1.5]

28.1.9.6 The information on fueling procedures referred to in 28.1.9.5(6) shall include at least the following information:

(1) Procedures before fueling:
  (a) Stop all engines and auxiliaries
  (b) Shut off all electricity, open flames, and heat sources
  (c) Check bilges for fuel vapors
  (d) Extinguish all smoking materials
  (e) Close access fittings and openings that could allow fuel vapors to enter the boat's enclosed spaces
  (f) Remove all personnel from the boat except the person handling the fueling hose
(2) Procedures during fueling:
  (a) Maintain nozzle contact with fill pipe
  (b) Attend fuel-filling nozzle at all times
  (c) Wipe up spills immediately
  (d) Avoid overfilling
(3) Procedures after fueling and before starting engine:
  (a) Inspect bilges for leakage or fuel odors
  (b) Ventilate until odors are removed [**303**:8.1.6]

28.2 Marine Terminals, Piers, and Wharves.

28.2.1 Section 28.2 shall apply to marine terminals as defined herein. Special use piers and wharf structures that are not marine terminals, such as public assembly, residential, business, or recreational occupancies that differ in design and construction from cargo handling piers, require special consideration. The general principles of NFPA 307 for the construction and fire protection of piers and wharves shall be applicable to such structures and shall comply with NFPA 307, *Standard for the Construction and Fire Protection of Marine Terminals, Piers, and Wharves,* and Section 28.2.

28.2.2* Section 28.2 shall not apply to marinas and boatyards. *(See Section 28.1.)* [**307:**1.3.2]

28.2.3 Section 28.2 shall not apply to the handling of the following:

(1)*Flammable or combustible liquids in bulk (*See Chapter 66.*) [**307:**1.1.3]
(2)*Liquefied gases in bulk (*See Chapter 69.*) [**307:**1.3.3]

28.2.4 Nothing in Section 28.2 shall supersede any of the regulations of governmental or other regulatory authority. [**307:**1.1.2]

28.3 Construction, Conversion, Repair, and Lay-Up of Vessels.

28.3.1* The construction, conversion, repair, or lay-up of vessels shall comply with NFPA 312, *Standard for Fire Protection of Vessels During Construction, Repair, and Lay-Up,* and Section 28.3.

28.3.2 Nothing in Section 28.3 shall be construed as prohibiting the immediate dry-docking of a vessel whose safety is imperiled, as by being in a sinking condition or by being seriously damaged. [**312:**1.2.2]

28.3.3 In such cases, all necessary precautionary measures shall be taken as soon as practicable. [**312:**1.2.3]

28.3.4 The requirements of Section 28.3 shall not apply to situations where it is in conflict with or superseded by requirements of any government regulatory agency. [**312:**1.1.2]

Chapter 29 Parking Garages

29.1 General.

29.1.1 The construction and protection of new and existing parking garages as well as the control of hazards in open parking structures, enclosed parking structures, and basement and underground parking structures shall comply with Section 42.8 of NFPA *101,* NFPA 88A, *Standard for Parking Structures;* and this chapter.

29.1.2 Chapter 29 shall not apply to parking garages in one- and two-family dwellings.

Chapter 30 Motor Fuel Dispensing Facilities and Repair Garages

30.1 Motor Fuel Dispensing Facilities.

30.1.1 Application.

30.1.1.1 *Motor fuel dispensing facilities,* marine/motor fuel dispensing facilities, motor fuel dispensing facilities located inside buildings, and fleet vehicle motor fuel dispensing facilities shall comply with NFPA 30A, *Code for Motor Fuel Dispensing Facilities and Repair Garages,* Section 30.1, and Section 30.3.

30.1.1.2 This chapter shall not apply to refueling operations. *(For refueling operations, see Chapter 42.)*

30.1.1.3 Permits. Permits, where required, shall comply with Section 1.12.

30.1.2 Occupancy Classification. The occupancy classification of a motor fuel dispensing facility that is located inside a building or structure shall be a low hazard industrial occupancy as defined in NFPA *101.* [**30A:**7.3.1]

30.1.3 Means of Egress. In a motor fuel dispensing facility that is located inside a building or structure, the required number, location, and construction of means of egress shall meet all applicable requirements for special purpose industrial occupancies, as set forth in NFPA *101.* [**30A:**7.3.3]

30.1.4 Drainage. Where Class I or Class II liquids are dispensed, provisions shall be made to prevent spilled liquids from flowing into the interior of buildings. Such provisions shall be made by grading driveways, raising door sills, or other equally effective means. [**30A:**7.3.4]

30.1.5 Fixed Fire Protection.

30.1.5.1* For an unattended, self-serve, motor fuel dispensing facility, additional fire protection shall be provided where required by the AHJ. [**30A:**7.3.5.1]

30.1.5.2 Where required, an automatic fire suppression system shall be installed in accordance with the appropriate NFPA standard, manufacturers' instructions, and the listing requirements of the systems. [**30A:**7.3.5.2]

30.1.6 Fuel Dispensing Areas Inside Buildings.

30.1.6.1 The fuel dispensing area shall be separated from all other portions of the building by walls, partitions, floors, and floor–ceiling assemblies having a fire resistance rating of not less than 2 hours. [**30A:**7.3.6.1]

30.1.6.2 Interior finish shall be of noncombustible materials or of approved limited-combustible materials, as defined in this *Code* and NFPA 220. [**30A:**7.3.6.2]

30.1.6.3 Door and window openings in fire-rated interior walls shall be provided with listed fire doors having a fire protection rating of not less than 1½ hours. Doors shall be self-closing. They shall be permitted to remain open during normal operations if they are designed to close automatically in a fire emergency by means of listed closure devices. Fire doors shall be installed in accordance with NFPA 80. They shall be kept unobstructed at all times. [**30A:**7.3.6.3]

30.1.6.4 Openings for ducts in fire-rated interior partitions and walls shall be protected by listed fire dampers. Openings for ducts in fire-rated floor or floor–ceiling assemblies shall be protected with enclosed shafts. Enclosure of shafts shall be with wall or partition assemblies having a fire resistance rating of not less than 2 hours. Openings for ducts into enclosed shafts shall be protected with listed fire dampers. [**30A:**7.3.6.4]

30.1.6.5 The fuel dispensing area shall be located at street level, with no dispenser located more than 50 ft (15 m) from the vehicle exit to, or entrance from, the outside of the building. [**30A:**7.3.6.5]

30.1.6.6 The fuel dispensing area shall be limited to that required to serve not more than four vehicles at one time.

*Exception: At a fleet vehicle motor fuel dispensing facility inside a building, where only Class II and Class III liquids are dispensed, the number of vehicles serviced at any one time shall be permitted to be increased to 12. [**30A:**7.3.6.6]*

30.1.6.7* A mechanical exhaust system that serves only the fuel dispensing area shall be provided. This system shall meet all of the following requirements:

(1) The system shall be interlocked with the dispensing system so that airflow is established before any dispensing device can operate. Failure of airflow shall automatically shut down the dispensing system.
(2) The exhaust system shall be designed to provide air movement across all portions of the floor of the fuel dispensing area and to prevent the flowing of ignitable vapors beyond the dispensing area.
(3) Exhaust inlet ducts shall not be less than 3 in. (76 mm) or more than 12 in. (305 mm) above the floor. Exhaust ducts shall not be located in floors or penetrate the floor of the dispensing area. Exhaust ducts shall discharge to a safe location outside the building.
(4) The exhaust system shall provide ventilation at a rate of not less than 1 cfm/ft^2 (0.3 m^3/min/m^2) of floor area, based on the fuel dispensing area.
(5) The exhaust system shall meet all applicable requirements of NFPA 91.

Exception: The provisions of 30.1.6.7 shall not apply to a fuel dispensing area located inside a building if two or more sides of the dispensing area are open to the building exterior. [30A:7.3.6.7]

30.1.6.8 The floor of the dispensing area shall be liquidtight. Where Class I liquids are dispensed, provisions shall be made to prevent spilled liquids from flowing out of the fuel dispensing area and into other areas of the building by means of curbs, scuppers, special drainage systems, or other means acceptable to the AHJ. [30A:7.3.6.8]

30.1.6.9* Oil drainage systems shall be equipped with approved oil/water traps or separators, if they connect to public sewers or they discharge into public waterways. [30A:7.3.6.9]

30.2 Repair Garages.

30.2.1 Application. The construction and protection of, as well as the control of hazards in, garages used for major repair and maintenance of motorized vehicles and any sales and servicing facilities associated therewith shall comply with NFPA 30A, Section 30.2, and Section 30.3.

30.2.1.1 Permits. Permits, where required, shall comply with Section 1.12.

30.2.2 Occupancy Classification. The occupancy classification of a repair garage shall be a special purpose industrial occupancy as defined in NFPA *101*. [30A:7.4.1]

30.2.3 General Construction Requirements. In major repair garages, where CNG-fueled vehicles, LNG-fueled vehicles, or LP-Gas-fueled vehicles are repaired, all applicable requirements of NFPA 52 or NFPA 58, whichever is applicable, shall be met. [30A:7.4.2]

30.2.4 Means of Egress. In a repair garage, the required number, location, and construction of means of egress shall meet all applicable requirements for special purpose industrial occupancies, as set forth in NFPA *101*. [30A:7.4.3]

30.2.5 Drainage. In areas of repair garages used for repair or servicing of vehicles, floor assemblies shall be constructed of noncombustible materials or, if combustible materials are used in the assembly, they shall be surfaced with approved, nonabsorbent, noncombustible material.

Exception: Slip-resistant, nonabsorbent, interior floor finishes having a critical radiant flux not more than 0.45 W/cm^2, as determined by NFPA 253, shall be permitted. [30A:7.4.4]

30.2.5.1 Floors shall be liquidtight to prevent the leakage or seepage of liquids and shall be sloped to facilitate the movement of water, fuel, or other liquids to floor drains. [30A:7.4.4.1]

30.2.5.2 In areas of repair garages where vehicles are serviced, any floor drains shall be properly trapped and shall discharge through an oil/water separator to the sewer or to an outside vented sump. [30A:7.4.4.2]

30.2.6 Pits, Belowgrade Work Areas, and Subfloor Work Areas.

30.2.6.1 Pits, belowgrade work areas, and subfloor work areas used for lubrication, inspection, and minor automotive maintenance work shall comply with the provisions of Section 30.2, in addition to other applicable requirements of NFPA 30A. [30A:7.4.5.1]

30.2.6.2 Walls, floors, and structural supports shall be constructed of masonry, concrete, steel, or other approved noncombustible materials. [30A:7.4.5.2]

30.2.6.3 In pits, belowgrade work areas, and subfloor work areas, the required number, location, and construction of means of egress shall meet the requirements for special purpose industrial occupancies in Chapter 40 of NFPA *101*. [30A:7.4.5.3]

30.2.6.4 Pits, belowgrade work areas, and subfloor work areas shall be provided with exhaust ventilation at a rate of not less than 1 cfm/ft^2 (0.3 m^3/min/m^2) of floor area at all times that the building is occupied or when vehicles are parked in or over these areas. Exhaust air shall be taken from a point within 12 in. (0.3 m) of the floor. [30A:7.4.5.4]

30.2.7 Fixed Fire Protection. Automatic sprinkler protection installed in accordance with the requirements of NFPA 13 shall be provided in major repair garages, as herein defined, when any of the following conditions exist:

(1) The major repair garage is two or more stories in height, including basements, and any one of the floors exceeds 10,000 ft^2 (930 m^2).
(2) The major repair garage is one story and exceeds 12,000 ft^2 (1115 m^2).
(3) The major repair garage is servicing vehicles parked in the basement of the building. [30A:7.4.6]

30.2.8* Heating, Ventilating, and Air-Conditioning.

30.2.8.1* Forced air heating, air-conditioning, and ventilating systems serving a fuel dispensing area inside a building or a repair garage shall not be interconnected with any such systems serving other occupancies in the building. Such systems shall be installed in accordance with NFPA 90A. [30A:7.5.1]

30.2.8.2 Return air openings in areas of repair garages used for the repair or servicing of vehicles or in a fuel dispensing area shall be not less than 18 in. (455 mm) above floor level measured to the bottom of the openings. [30A:7.5.2]

30.2.8.3 Combined ventilation and heating systems shall not recirculate air from areas that are below grade level. [30A:7.5.3]

30.2.8.4 Exhaust duct openings shall be located so that they effectively remove vapor accumulations at floor level from all parts of the floor area. [30A:7.5.4]

30.2.9 Heat-Producing Appliances.

30.2.9.1 Heat-producing appliances shall be installed in accordance with the requirements of 30.2.9. They shall be permitted to be installed in the conventional manner except as provided in 30.2.9. [**30A:**7.6.1]

30.2.9.2 Heat-producing appliances shall be of an approved type. Solid fuel stoves, improvised furnaces, salamanders, or space heaters shall not be permitted in areas of repair garages used for repairing or servicing of vehicles or in a fuel dispensing area.

Exception No. 1: Unit heaters, when installed in accordance with Chapter 7 of NFPA 30A, need not meet this requirement.

*Exception No. 2: Heat-producing equipment for any lubrication room or service room where there is no dispensing or transferring of Class I or Class II liquids or LP-Gas, when installed in accordance with Chapter 7 of NFPA 30A, need not meet this requirement. [**30A:**7.6.2]*

30.2.9.3 Heat-producing appliances shall be permitted to be installed in a special room that is separated from areas that are classified as Division 1 or Division 2, in accordance with Chapter 8 of NFPA 30A, by walls that are constructed to prevent the transmission of vapors, that have a fire resistance rating of at least 1 hour, and that have no openings in the walls that lead to a classified area within 8 ft (2.4 m) of the floor. Specific small openings through the wall, such as for piping and electrical conduit, shall be permitted, provided the gaps and voids are filled with a fire-resistant material to resist transmission of vapors. All air for combustion purposes shall be taken from outside the building. This room shall not be used for storage of combustible materials, except for fuel storage as permitted by the standards referenced in 30.2.9.9. [**30A:**7.6.3]

30.2.9.4 Heat-producing appliances using gas or oil fuel shall be permitted to be installed in a lubrication or service room where there is no dispensing or transferring of Class I liquids, including the open draining of automotive gasoline tanks, provided the bottom of the combustion chamber is at least 18 in. (455 mm) above the floor and the appliances are protected from physical damage. [**30A:**7.6.4]

30.2.9.5 Heat-producing appliances using gas or oil fuel listed for use in garages shall be permitted to be installed in lubrication rooms, service rooms, or fuel dispensing areas where Class I liquids are dispensed or transferred, provided the equipment is installed at least 8 ft (2.4 m) above the floor. [**30A:**7.6.5]

30.2.9.6* Where major repairs are conducted on CNG-fueled vehicles or LNG-fueled vehicles, open flame heaters or heating equipment with exposed surfaces having a temperature in excess of 750°F (399°C) shall not be permitted in areas subject to ignitable concentrations of gas. [**30A:**7.6.6]

30.2.9.7 Electrical heat-producing appliances shall meet the requirements of Chapter 8 of NFPA 30A. [**30A:**7.6.7]

30.2.9.8 Fuels used shall be of the type and quality specified by the manufacturer of the heating appliance. Crankcase drainings shall not be used in oil-fired appliances, unless the appliances are specifically approved for such use. [**30A:**7.6.8]

30.2.9.9 Heat-producing appliances shall be installed to meet the requirements of NFPA 90A; NFPA 31, *Standard for the Installation of Oil-Burning Equipment*; NFPA 54, *National Fuel Gas Code*; NFPA 211, *Standard for Chimneys, Fireplaces, Vents, and Solid Fuel-Burning Appliances*; and NFPA 82, *Standard on Incinerators and Waste and Linen Handling Systems and Equipment*; as applicable, except as hereinafter specifically provided. [**30A:**7.6.9]

30.3 Operational Requirements.

30.3.1 Dispensing from a Tank that Does Not Exceed 120 Gal (454 L) and from Containers Inside Buildings. Dispensing of flammable and combustible liquids from a tank not exceeding 120 gal (454 L) capacity and from containers in a motor fuel dispensing facility or in a repair garage building shall meet the requirements of 30.3.1.1 and of 30.3.1.2. *(See 4.3.9 of NFPA 30A for storage quantity limitations.)* [**30A:**9.2.4]

30.3.1.1 Not more than one container of Class I liquid shall be permitted to be provided with a dispensing pump inside a building at any one time. The number of tanks or containers of Class II or Class IIIA liquids fitted for dispensing at any one time shall not be limited, except as provided for in 4.3.9.2 of NFPA 30A. The number of tanks or containers of Class IIIB liquids fitted for dispensing at any one time shall not be limited. [**30A:**9.2.4.1]

30.3.1.2 Class I, Class II, and Class IIIA liquids shall not be dispensed by applying pressure to tanks or containers. Listed pumps that take suction through the top of the tank or container or listed self-closing faucets shall be used. [**30A:**9.2.4.2]

30.3.2 Basic Fire Control.

30.3.2.1 Sources of Ignition. Smoking materials, including matches and lighters, shall not be used within 20 ft (6 m) of areas used for fueling, servicing fuel systems of internal combustion engines, or receiving or dispensing of Class I and Class II liquids. The motors of all equipment being fueled shall be shut off during the fueling operation except for emergency generators, pumps, and so forth, where continuing operation is essential. [**30A:**9.2.5.1]

30.3.2.2 Fire Extinguishers. Each motor fuel dispensing facility or repair garage shall be provided with fire extinguishers installed, inspected, and maintained as required by Section 13.6. Extinguishers for outside motor fuel dispensing areas shall be provided according to the extra (high) hazard requirements for Class B hazards, except that the maximum travel distance to a 80 B:C extinguisher shall be permitted to be 100 feet. [**30A:**9.2.5.2]

30.3.2.3 Fire Suppression Systems. Where required, automatic fire suppression systems shall be installed in accordance with the appropriate NFPA standard, manufacturers' instructions, and the listing requirements of the systems. [**30A:**9.2.5.3]

30.3.2.4 Waste Handling.

30.3.2.4.1 Crankcase drainings and waste liquids shall not be dumped into sewers, into streams, or on the ground. They shall be stored in approved tanks or containers outside any building, or in tanks installed in accordance with Chapter 4 and Chapter 5 of NFPA 30A, until removed from the premises.

*Exception: As provided for in 4.3.9.3 of NFPA 30A. [**30A:**9.2.6.1]*

30.3.2.4.2 The contents of oil separators and traps of floor drainage systems shall be collected at sufficiently frequent intervals to prevent oil from being carried into sewers. [**30A:**9.2.6.2]

30.3.2.5 Housekeeping. The dispensing area and the area within any dike shall be kept free of vegetation, debris, and any other material that is not necessary to the proper operation of the motor fuel dispensing facility. [**30A:**9.2.7]

30.3.2.6 Fire Doors. Fire doors shall be kept unobstructed at all times. Appropriate signs and markings shall be used. [**30A:**9.2.8]

Chapter 31 Forest Products

31.1* General. The storage, manufacturing, and processing of timber, lumber, plywood, veneers, and by-products shall be in accordance with this chapter and NFPA 664, *Standard for the Prevention of Fires and Explosions in Wood Processing and Woodworking Facilities.*

31.2 Permits. Permits, where required, shall comply with Section 1.12.

31.3 Protection of Storage of Forest Products.

31.3.1 Application.

31.3.1.1 The requirements of this chapter shall apply to the outside storage of the following:

(1) Lumber and wood panel products at retail and wholesale lumber storage yards
(2) Lumber and wood panel products at other than retail and wholesale storage yards
(3) Ties, poles, piles, posts, and other similar forest products at pressure-treating plant yards
(4) Outside storage of wood chips, hogged material, and wood by-products
(5) Logs

31.3.1.2 The requirements of this chapter shall not apply to forest products stored on piers and wharves as addressed in NFPA 307, *Standard for the Construction and Fire Protection of Marine Terminals, Piers, and Wharves.*

31.3.2 General Fire Protection. The requirements in this subsection shall apply to all facilities regulated by 31.3.3 through 31.3.7 except as modified by those subsections.

31.3.2.1 Operational Fire Prevention.

31.3.2.1.1* Combustible waste materials such as bark, sawdust, chips, and other debris shall not be permitted to accumulate in a quantity or location that constitutes an undue fire hazard.

31.3.2.1.2 Smoking shall be prohibited except in specified safe locations approved by the AHJ.

31.3.2.1.2.1 Signs that read "No Smoking" shall be posted in those areas where smoking is prohibited.

31.3.2.1.2.2 Signs indicating areas designated as safe for smoking shall be posted in those locations where smoking is permitted.

31.3.2.1.2.3 Smoking areas shall be provided with approved, noncombustible ash receptacles.

31.3.2.1.2.4 Smoking shall be specifically prohibited in and around railroad cars.

31.3.2.1.3 Access into yard areas by unauthorized persons shall be prohibited.

31.3.2.1.4 Storage areas shall be enclosed with a fence equipped with effective gates located as necessary to allow the entry of fire department apparatus.

31.3.2.1.5 Miscellaneous occupancy hazards such as vehicle storage and repair shops, cutting and welding operations, flammable liquid storage, liquefied petroleum gas storage, and similar operations shall be safeguarded in accordance with recognized good practice and this *Code.*

31.3.2.1.6 Vehicles and other power devices shall be of an approved type and shall be safely maintained and operated.

31.3.2.1.6.1* Vehicle fueling operations shall be conducted in specified safe locations, isolated from storage areas and principal operating buildings.

31.3.2.1.6.2 Diesel- or gasoline-fueled vehicles that operate on hogged material or chip piles, in log storage areas, or in lumber storage areas shall be equipped with fixed fire-extinguishing systems of a type approved for off-road vehicles.

31.3.2.1.7 All electrical equipment and installations shall conform to the provisions of Section 11.1.

31.3.2.1.8 Salamanders, braziers, open fires, and similar dangerous heating arrangements shall be prohibited.

31.3.2.1.9 Heating devices shall be limited to approved-type equipment installed in an approved manner.

31.3.2.1.10 Suitable safeguards shall be provided to minimize the hazard of sparks caused by equipment such as refuse burners, boiler stacks, vehicle exhausts, and locomotives.

31.3.2.1.10.1* Burning of shavings, sawdust, and refuse materials shall be conducted only in an approved, enclosed refuse burner equipped with an approved spark arrester and located at a safe distance from the nearest point of any yard. *(See Section 10.11.)*

31.3.2.1.10.2 The design and location of large burners presents special problems, and the AHJ shall be consulted.

31.3.2.1.11 Stacks from solid fuel-burning furnaces and boilers shall be equipped with spark-arresting equipment to prevent hot sparks from reaching the ground, and consideration shall be given to spark hazard in determining the height of such stacks.

31.3.2.1.12 Cutting, welding, or other use of open flames or spark-producing equipment shall not be permitted in the storage area unless by an approved permit system.

31.3.2.2 Exposure Protection. Exposure to the yard shall be protected in accordance with the requirements of 31.3.2.2.1 through 31.3.2.2.2.

31.3.2.2.1* Yard areas shall be separated from plant operations and other structures so that fire exposure into the yard is minimized.

31.3.2.2.1.1 Minimum separation shall be by means of a clear space permanently available for fire-fighting operations.

31.3.2.2.1.2 The width of the clear space shall be based on the severity of exposure, which varies with the area, height, occupancy, construction, and protection of the exposing structure and the type of stacking and height of adjacent stacks.

31.3.2.2.2* Forest, brush, and grass fire exposure shall be minimized by providing adequate clear space that is carefully kept free of combustible vegetation.

31.3.2.2.2.1 Clear space of a width at least equivalent to the fire department access road shall be provided for grass exposures, and clear space of a width not less than 100 ft (30 m) shall be provided for light brush exposures.

31.3.2.2.2.2 In forested areas, a wider clear space than in 31.3.2.2.2.1 shall be provided.

31.3.2.3* Fire Detection and Extinguishment. A reliable means for prompt transmission of fire alarms to public fire departments and plant emergency organizations shall be provided.

31.3.3 Outside Storage of Lumber and Wood Panel Products at Retail and Wholesale Storage Yards.

31.3.3.1 Application.

31.3.3.1.1 The requirements of 31.3.3 shall apply to the following areas:

(1) Retail lumberyards handling forest products and other building materials
(2) Wholesale lumber storage yards, including distribution, holding, and transshipment areas

31.3.3.1.2* The requirements of 31.3.4 shall apply to other than large outside wholesale and retail distribution yards.

31.3.3.2 General.

31.3.3.2.1* The fire hazard potential inherent in lumber storage operations with large quantities of combustible materials shall be controlled by a positive fire prevention program under the direct supervision of upper level management that shall include the following:

(1) Selection, design, and arrangement of storage yard areas and materials-handling equipment based upon proven fire prevention and protection principles
(2) Means for early fire detection, transmission of alarm, and fire extinguishment
(3) Fire department access roads to separate large stacks and provide access for effective fire-fighting operations
(4) Separation of yard storage from yard buildings and other exposing properties
(5) Effective fire prevention maintenance program, including regular yard inspections by trained personnel

31.3.3.2.2* Water supplies shall be provided in accordance with this *Code*.

31.3.3.3 Open Yard Storage.

31.3.3.3.1* Lumber stacks shall be on stable ground, and paved or surfaced with materials such as cinders, fine gravel, or stone.

31.3.3.3.2 The method of stacking shall be stable and in an orderly and regular manner.

31.3.3.3.3* The height of stacks shall not exceed 20 ft (6 m) with consideration for stability.

31.3.3.3.4 Where stacks are supported clear of the ground, 6 in. (150 mm) of clearance shall be provided for cleaning operations under the stacks.

31.3.3.3.5 Fire department access roads shall be spaced so that a grid system of not more than 50 ft × 150 ft (15 m × 46 m) is produced.

31.3.3.3.6 Fire department access roads shall comply with Section 18.2.

31.3.3.3.7 Stacking limits shall be designated to indicate yard area and alleyway limits in accordance with 31.3.3.3.7.1 or 31.3.3.3.7.2.

31.3.3.3.7.1 The stacking limits shall be designated with boundary posts having signs that indicate stacking limits unless otherwise permitted by 31.3.3.3.7.2.

31.3.3.3.7.2 Where yards have paved areas, painted boundary limits shall be permitted to be used to designate stacking limits.

31.3.3.4 Exposure Protection.

31.3.3.4.1 Exposure to the Yard.

31.3.3.4.1.1 Open yard stacking shall be located with not less than 15 ft (4.6 m) clear space to buildings.

31.3.3.4.1.2 Boundary posts with signs designating stacking limits shall be provided to designate the clear space to unsprinklered buildings in which hazardous manufacturing or other operations take place.

31.3.3.4.2* Exposure from the Yard.

31.3.3.4.2.1 Open yard stacking shall be located with not less than 15 ft (4.6 m) clear space to adjacent property lines.

31.3.3.4.2.2 Alternative forms of exposure protection shall be permitted where approved by the AHJ.

31.3.4 Outside Storage of Lumber and Wood Panel Products at Other than Retail and Wholesale Storage Yards.

31.3.4.1* Application. The requirements of 31.3.4 shall apply to large yard storage areas containing lumber, wood panels, and other similar wood products not intended for retail or wholesale distribution at the site.

31.3.4.2* General. The fire hazard potential inherent in forest product storage operations with large quantities of combustible materials shall be controlled by a positive fire prevention program under the direct supervision of upper level management that shall include the following:

(1) Selection, design, and arrangement of storage yard areas and materials-handling equipment based on sound fire prevention and protection principles
(2) Means for early fire detection, transmission of alarm, and fire extinguishment
(3) Fire department access roads to separate large stacks and provide access for effective fire-fighting operations
(4) Separation of yard storage from mill or other plant operations and other exposing properties
(5) Effective fire prevention maintenance program, including regular yard inspections by trained personnel

31.3.4.3* Open Yard Storage.

31.3.4.3.1* Water supplies shall be provided in accordance with this *Code*.

31.3.4.3.2 Access to the plant and yard from public highways shall be provided by all-weather roadways capable of supporting fire department apparatus.

31.3.4.3.3 The storage site shall be reasonably level, on solid ground, and paved or surfaced with materials such as cinders, fine gravel, or stone.

31.3.4.3.4 Stack height shall be limited to 20 ft (6 m).

31.3.5 Outside Storage of Ties, Poles, Piles, Posts, and Other Similar Forest Products at Pressure-Treating Plant Yards.

31.3.5.1 Application.

31.3.5.1.1* The requirements of 31.3.5 shall apply to yard storage areas containing treated and untreated ties, poles, piles, posts, and other similar forest products in yards connected with pressure-treating plants.

31.3.5.1.2 The requirements of 31.3.5 shall not apply to pressure-treating buildings, processes, or storage of treating materials.

31.3.5.2* General. The fire hazard potential inherent in tie storage operations with large quantities of combustible materials shall be controlled by a positive fire prevention program under the direct supervision of upper level management that shall include the following:

(1) Selection, design, and arrangement of storage yard areas and materials-handling equipment based upon sound fire prevention and protection principles
(2) Means for early fire detection, transmission of alarm, and fire extinguishment
(3) Fire department access roads to separate large stacks and provide access for effective fire-fighting operations
(4) Separation of yard storage from mill buildings and other exposing properties
(5) Effective fire prevention maintenance program, including regular yard inspections by trained personnel

31.3.5.3* Tie Yard Protection.

31.3.5.3.1* Unobstructed alleyways of sufficient width for hand or cart fire hose laying operations shall be provided between piles.

31.3.5.3.1.1 Alleyways shall not be less than 2 ft (0.6 m) in width.

31.3.5.3.1.2 Where a minimum alleyway width of 4 ft (1.2 m) is provided, the length of the rows shall be not more than 100 ft (30 m).

31.3.5.3.1.3 Where an alleyway width less than 4 ft (1.2 m) is provided, the length of the rows shall be not more than 75 ft (23 m).

31.3.5.3.2* Water supplies shall be provided in accordance with this *Code*.

31.3.5.3.3 Access to the plant and yard from public highways shall be provided by all-weather roadways capable of supporting fire department apparatus.

31.3.5.3.4 The storage site shall be reasonably level, on solid ground, and paved or surfaced with materials such as cinders, fine gravel, or stone.

31.3.5.3.5* Stack heights shall be limited to 20 ft (6 m).

31.3.6 Outside Storage of Wood Chips and Hogged Material.

31.3.6.1* Application. The requirements of 31.3.6 shall apply to yard storage areas containing wood chips and hogged material.

31.3.6.2 General.

31.3.6.2.1* The fire hazard potential inherent in storage piles shall be controlled by a positive fire prevention program under the direct supervision of upper level management that shall include the following:

(1) Selection, design, and arrangement of storage yard areas and materials-handling equipment based upon sound fire prevention and protection principles
(2) Establishment of control over the various factors that lead to spontaneous heating, including provisions for monitoring the internal condition of the pile
(3) Means for early fire detection and extinguishment
(4) Fire department access roads around the piles and access roads to the top of the piles for effective fire-fighting operations
(5) Facilities for calling the public fire department and facilities needed by the fire department for fire extinguishment
(6) Effective fire prevention maintenance program, including regular yard inspections by trained personnel

31.3.6.2.2* The following items shall be addressed when establishing operating procedures:

(1) The storage site shall be reasonably level, solid ground, or shall be paved with blacktop, concrete, or other hard-surface material.
(2) Sites shall be cleaned before transferring wood products to the site.
(3) Operating plans for the buildup and reclaiming of the pile shall be based on a turnover time of not more than 1 year under ideal conditions.
(4)*Piles containing other than screened chips made from cleaned and barked logs shall be minimized.
(5)*The pile size shall be limited.
(6) Pile heights shall be kept low, particularly piles that inherently carry a larger percentage of fines and are subject to greater compaction.
(7) Thermocouples shall be installed during pile buildup, or other means for measuring temperatures within the pile shall be provided with regular (normally weekly) reports to management.
(8)*The pile shall be wetted regularly to help keep fines from drying out and help maintain the moisture content of the surface layer of the pile.

31.3.6.3* Pile Protection.

31.3.6.3.1* Piles shall be constructed with an access roadway to the top of the pile in order to reach any part of the pile.

31.3.6.3.2* Piles shall not exceed 60 ft (18 m) in height, 300 ft (90 m) in width, and 500 ft (150 m) in length.

31.3.6.3.2.1 Where pile height and width are such that all portions of the pile cannot be reached by direct hose streams from the ground, arrangements shall be made to provide fire-fighting service in these areas, and small fire stream supplies shall be available on the top of the pile for handling small surface fires and for wetting the pile in dry weather.

31.3.6.3.2.2 When piles exceed 500 ft (150 m) in length, they shall be subdivided by fire department access roads having not less than 30 ft (9 m) of clear space at the base of the piles.

31.3.6.3.2.3 Low barrier walls around piles shall be provided to clearly define pile perimeters, prevent creeping, and facilitate cleanup of fire department access roads.

31.3.6.3.3 Where suitable, a small, motorized vehicle amply equipped with portable extinguishing equipment or a water tank and pump shall be provided.

31.3.6.3.3.1 Lightweight ladders that can be placed against the side of the pile shall be placed at convenient locations throughout the yard for use by the plant emergency organization.

31.3.6.3.3.2 Training of the plant emergency organization also shall include procedures and precautions to be observed by yard crews employing power equipment in fighting internal fires.

31.3.6.3.4* Portable fire extinguishers for Class A fires shall be provided in accordance with Section 13.6 on all vehicles operating on the pile in addition to the normal Class B units for the vehicle.

31.3.6.3.5* Water supplies shall be provided in accordance with this *Code*.

31.3.6.3.6 All motor and switchgear enclosures shall be provided with approved, portable fire extinguishers suitable for the hazard involved in accordance with Section 13.6.

31.3.6.3.7* Power-operated, shovel-type or scoop-type vehicles, dozers, or similar equipment shall be available for use in moving stored material for fire fighting.

31.3.6.3.8 Temporary conveyors and motors on the surface or adjacent to the piles shall not be permitted.

31.3.6.3.9 Physical protection shall be provided to prevent heat sources such as steam lines, air lines, electrical motors, and mechanical drive equipment from becoming buried or heavily coated with combustible material.

31.3.6.3.10 Tramp metal collectors or detectors shall be required on all conveyor and blower systems.

31.3.6.4 Exposure Protection.

31.3.6.4.1* Incinerators or open refuse burning shall not be permitted in any area where sparks could reach the storage piles.

31.3.6.4.2* A clear space of not less than 15 ft (4.6 m) shall be maintained between piles and exposing structures, yard equipment, or stock, depending on the degree of exposure hazard.

31.3.6.4.3* Pile-to-pile clearance of not less than 30 ft (9 m) at the base of the pile shall be provided.

31.3.6.5 Emergency Plan. The facility shall have an emergency plan for monitoring, controlling, and extinguishing spot fires.

31.3.7* Storage and Processing of Wood Chips, Hogged Material, Fines, Compost, and Raw Products at Yard Waste Recycling Facilities.

31.3.7.1 The storage and processing of wood chips, hogged material, fines, compost, and raw products produced from yard waste recycling facilities shall comply with 31.3.6 and 31.3.7.

31.3.7.2 When not protected by a fixed fire-extinguishing system in accordance with Chapter 13, piles shall not exceed 25 ft (7.6 m) in height, 150 ft (45 m) in width, and 250 ft (76.2 m) in length.

31.3.7.3 Static Pile Protection.

31.3.7.3.1 Static piles shall be monitored by an approved means to measure temperatures within the piles.

31.3.7.3.2 Internal pile temperatures shall be recorded weekly.

31.3.7.3.3 Records shall be kept on file at the facility and made available for inspection.

31.3.7.3.4 The facility shall have an operational plan indicating procedures and schedules for the inspection, monitoring, and restricting of excessive internal temperatures in static piles.

31.3.7.4 Fire Protection.

31.3.7.4.1 Conveyor tunnels and combustible enclosures that pass under a pile shall be protected with automatic sprinklers complying with Section 13.3.

31.3.7.4.2 Combustible or enclosed conveyor systems shall be protected with automatic sprinklers complying with Chapter 13.

31.3.8 Outside Storage of Logs.

31.3.8.1 Application.

31.3.8.1.1* The requirements of 31.3.8 shall apply to log yard storage areas containing saw, plywood veneer, or pulpwood logs stored in ranked piles commonly referred to as cold decks.

31.3.8.1.2 The requirements of 31.3.8 shall not apply to cordwood.

31.3.8.2* General. The fire hazard potential inherent in log storage operations with large quantities of combustible materials shall be controlled by a positive fire prevention program under the direct supervision of upper level management that shall include the following:

(1) Selection, design, and arrangement of storage yard areas and materials-handling equipment based on sound fire prevention and protection principles
(2) Means for early fire detection, transmission of alarm, and fire extinguishment
(3) Fire department access roads to separate large piles and provide access for effective fire-fighting operations
(4) Separation of yard storage from mill operations and other exposing properties
(5) Effective fire prevention maintenance program, including regular yard inspections by trained personnel

31.3.8.3* Log Yard Protection.

31.3.8.3.1 The storage site shall be reasonably level, on solid ground, and paved or surfaced with materials such as cinders, fine gravel, or stone.

31.3.8.3.2 Access to the plant and yard from public highways shall be provided by all-weather roadways capable of supporting fire department apparatus.

31.3.8.3.3* All sides of each cold deck shall be accessible by means of fire department access roads.

31.3.8.3.3.1 A fire department access road width of 1½ times the pile height but not less than 20 ft (6 m) shall be provided, with fire department access roads between alternate rows of two pile groups providing a clear space of at least 100 ft (30 m).

31.3.8.3.3.2* Each cold deck shall not exceed 500 ft (150 m) in length, 300 ft (90 m) in width, and 20 ft (6 m) in height.

31.3.8.3.3.3* Fire department access roads for access across each end, with a clear space of not less than 100 ft (30 m) to adjacent pile rows or other exposed property, shall be provided.

31.3.8.3.3.4* The size of cold decks shall be permitted to be increased where additional fire flow and fixed fire protection equipment is provided and the approval of the AHJ is obtained.

31.3.8.3.4 Water supplies shall be provided in accordance with this *Code*.

31.3.8.3.5 Dynamite shall never be used as a means to reclaim frozen log piles.

31.3.8.3.6* During dry weather, piles shall be wet down.

31.3.9 Wood Processing and Woodworking Facilities. Dust control shall be in accordance with NFPA 664 for combustible dust-producing operations that occupy areas of more than 5000 ft^2 (464 m^2), or to areas where dust-producing equipment requires an aggregate dust collection flow rate of more than 1500 ft^3/min (2549 m^3/hr).

Chapter 32 Motion Picture and Television Production Studio Soundstages and Approved Production Facilities

32.1 General. The design, construction, operation, and maintenance of soundstages and approved production facilities used in motion picture and television industry productions shall comply with NFPA 140, *Standard on Motion Picture and Television Production Studio Soundstages and Approved Production Facilities,* and Chapter 32.

32.2 Permits. Permits, where required, shall comply with Section 1.12.

32.3 Housekeeping. Soundstages and approved production facilities shall maintain housekeeping in accordance with Chapters 10 and 19 where applicable.

32.4 Fire Protection Features.

32.4.1 Sprinkler Systems.

32.4.1.1 Existing soundstages and existing approved production facilities equipped with automatic sprinkler systems shall maintain those systems in accordance with NFPA 25, *Standard for the Inspection, Testing, and Maintenance of Water-Based Fire Protection Systems.* [140:5.2.1]

32.4.1.2 A new soundstage or new approved production facility shall be equipped with an approved, supervised automatic sprinkler system. [140:5.2.2]

32.4.1.3 The automatic sprinkler system required by 32.4.1.2 shall be installed in accordance with NFPA 13 unless otherwise provided in 32.4.1.3.1 or 32.4.1.3.2. [140:5.2.3]

32.4.1.3.1* The requirements of NFPA 13 prohibiting obstructions to sprinkler discharge shall not be applicable if approved mitigation techniques are employed. [140:5.2.3.1]

32.4.1.3.2* The requirements of NFPA 13 prohibiting obstructions to sprinkler discharge shall not be applicable if the building sprinkler system meets the design criteria for Extra Hazard, Group 2. [140:5.2.3.2]

32.4.1.4 The automatic sprinkler system required by 32.4.1.2 shall be maintained in accordance with NFPA 25. [140:5.2.4]

32.4.2 Fire Alarm System. Fire alarm system notification appliances within soundstages and approved production facilities shall be permitted to be deactivated during videotaping, filming, or broadcasting of programs provided the following conditions exist:

(1) In the event of alarm system activation, notification appliances shall activate within a location that is constantly attended during the videotaping, filming, or broadcasting of programs.
(2) The attendants of the location identified in 32.4.2(1) are provided with a means of communicating with the fire command center for the building, where one is provided, and with the occupants of the soundstage to initiate emergency action.
(3) Deactivation of notification appliances shall cause activation of a visual signal at an approved location, which shall remain illuminated while notification appliances on the soundstage are deactivated.
(4) The visual signal shall be identified by a sign that shall read "When Illuminated, Soundstage Fire Alarm System Notification Appliances Are Deactivated." [140:5.3]

Chapter 33 Outside Storage of Tires

33.1* General.

33.1.1 Facilities storing more than 500 tires outside shall be in accordance with Chapter 33.

33.1.2 Permits. Permits, where required, shall comply with Section 1.12.

33.1.3 Fire department access roads to separate tire piles and for effective fire-fighting operations shall be in accordance with Table 33.1.3.

33.1.4 Separation of yard storage from buildings, vehicles, flammable materials, and other exposures shall be in accordance with Table 33.1.3.

33.1.5 Trees, plants, and vegetation within the separation areas shall be managed in accordance with Section 10.14.

33.1.6 Ignition Sources.

33.1.6.1 Smoking shall be prohibited within the tire storage area.

Table 33.1.3 Representative Minimum Exposure Separation Distances in Feet (Meters) for Tire Storage

Exposed Face Dimension		Pile Height													
ft	m	8 ft	2.4 m	10 ft	3 m	12 ft	3.7 m	14 ft	4.3 m	16 ft	4.9 m	18 ft	5.5 m	20 ft	6.1 m
25	7.6	56	17	62	19	67	20	73	22	77	23	82	25	85	26
50	15.2	75	23	84	26	93	28	100	30	107	33	113	34	118	36
100	30	100	30	116	35	128	39	137	42	146	44	155	47	164	50
150	45	100	30	116	35	128	39	137	42	146	44	155	47	164	50
200	61	100	30	116	35	128	39	137	42	146	44	155	47	164	50
250	75	100	30	116	35	128	39	137	42	146	44	155	47	164	50

33.1.6.2 Sources of ignition such as cutting and welding, heating devices, and open fires shall be prohibited within the tire storage area.

33.1.6.3 Safeguards shall be provided to minimize the hazard of sparks from equipment such as refuse burners, boiler stacks, and vehicle exhaust when such hazards are located near the tire storage area.

33.1.7 Piles of tires or altered tire material shall not be located beneath power lines or structures.

33.1.8 Piles of tires or altered tire material shall be at least 50 ft (15 m) from the perimeter fence.

33.1.9 Provisions for surface water drainage and measures to provide protection of pyrolitic oil runoff shall be directed around and away from the outdoor tire storage site to an approved location.

33.1.10 Tires shall be removed from rims immediately upon arrival at the storage site.

33.1.11 Tires shall not be stored on wetlands, flood plains, ravines, canyons, or steeply graded surfaces.

33.2 Individual Piles.

33.2.1 New Outside Tire Storage Sites and Piles.

33.2.1.1 New individual outside tire storage piles containing more than 500 tires shall be limited in volume to 125,000 ft^3 (3540 m^3).

33.2.1.2 The dimensions of new tire storage piles shall not exceed 10 ft (3 m) in height, 50 ft (15 m) in width, and 250 ft (75 m) in length.

33.2.1.3 Individual piles shall be separated in accordance with Table 33.1.3.

33.2.2 Existing Individual Piles.

33.2.2.1 Existing outside tire storage piles shall be in accordance with the provisions of 33.2.1 within 5 years of the adoption of this *Code*.

33.2.2.2 Existing individual outside tire storage piles containing more than 500 tires shall be limited in volume to 250,000 ft^3 (7080 m^3).

33.2.2.3 Existing pile dimensions shall not exceed 20 ft (6 m) in height, 50 ft (15 m) in width, and 250 ft (75 m) in length.

33.2.2.4 Individual piles shall be separated in accordance with Table 33.1.3.

33.3 Emergency Response Plan.

33.3.1 The operator of the outside tire storage facility shall develop an emergency response plan and submit it for approval by the AHJ.

33.3.2 The AHJ shall retain a copy of the approved emergency response plan.

33.3.3 The operator of the outside tire storage facility shall keep a copy of the approved emergency response plan at the facility.

33.3.4 The AHJ shall be immediately notified of and approve any proposed changes to the emergency response plan.

33.4 Fire Control Measures. Measures to aid in the control of fire shall be in accordance with Section 33.4.

33.4.1 Manual Fire-Fighting Equipment.

33.4.1.1 At a minimum, the following items shall be maintained on site and in working order:

(1) One 2A:10BC fire extinguisher
(2) One 2.5 gal (10 L) water extinguisher
(3) One 10 ft (3 m) long pike pole
(4) One rigid rake
(5) One round point shovel
(6) One square point shovel

33.4.1.2 One dry chemical fire extinguisher with a minimum rating of 4A:40BC shall be carried on each piece of fuel-powered equipment used to handle scrap tires.

33.4.1.3 On-site personnel shall be trained in the use and function of this equipment to mitigate tire pile ignition.

33.4.2 An approved water supply capable of supplying the required fire flow to protect exposures and perform fire suppression and overhaul operations shall be provided.

33.4.3* The AHJ shall be permitted to require additional tools and equipment for fire control and the protection of life and property.

33.5 Site Access.

33.5.1 Access to the site and each tire storage yard and pile shall be in accordance with Section 18.2 and this section.

33.5.2 Accesses shall be maintained clear of combustible waste or vegetation and shall remain accessible to the fire department at all times.

33.6 Signs and Security. Access by unauthorized persons and security of the site shall be in accordance with Section 33.6.

33.6.1 Signs bearing the name of the operator, the operating hours, emergency telephone numbers, and site rules shall be posted at site entrances.

33.6.2 The facility shall have noncombustible fencing at least 10 ft (3 m) high with intruder controls on top, in accordance with local laws, around the entire perimeter of the property.

33.6.3 Access.

33.6.3.1 Access to the facility shall be in accordance with Section 18.2.

33.6.3.2 An attendant shall be on site at all times when the site is open.

33.7 Outdoor Storage of Altered Tire Material. Outdoor storage of altered tire material in the form of chunks, chips, or crumbs shall be protected in accordance with 33.7.1 through 33.7.5.

33.7.1 A 10 ft (3 m) fence shall be maintained around the altered tire material storage area.

33.7.2 Altered tire material piles shall be kept 50 ft (15 m) from perimeter fencing.

33.7.3 Potential ignition sources such as welding, smoking, or other open flame uses shall not be allowed within 20 ft (6 m) of the altered tire pile.

33.7.4 Individual altered tire material piles shall not be located on site in excess of 90 days.

33.7.5* Individual altered tire material piles shall be kept sheltered from precipitation.

Chapter 34 General Storage

34.1 General.

34.1.1 Application. This chapter shall apply to the indoor and outdoor storage of materials representing the broad range of combustibles, including plastics, rubber tires, and roll paper.

34.1.1.1 Storage configurations shall include palletized storage, solid-piled storage, and storage in bin boxes, on shelves, or on racks.

34.1.1.2 This chapter shall not apply to the following:

(1) Unsprinklered buildings, except certain rack storage arrangements protected by high-expansion foam systems in accordance with this chapter
(2) Storage of commodities that, with their packaging and storage aids, would be classified as noncombustible
(3) Unpackaged bulk materials such as grain, coal, or similar commodities but excluding wood chips and sawdust, which are addressed in Chapter 31
(4) Inside or outside storage of commodities covered by this *Code*, except where specifically mentioned herein (e.g., pyroxylin plastics)
(5) Storage of high-hazard materials covered by this *Code*, except where specifically mentioned herein
(6) Storage on plastic shelves on racks
(7)*Miscellaneous tire storage
(8) Combustible fiber storage, which is covered in Chapter 45

34.1.2 Permits. Permits, where required, shall comply with Section 1.12.

34.2 Classification of Commodities.

34.2.1 Commodity classification and the corresponding protection requirements shall be determined based on the makeup of individual storage units (i.e., unit load, pallet load).

34.2.2 When specific test data of commodity classification by a nationally recognized testing agency are available, the data shall be permitted to be used in determining classification of commodities.

34.2.3 Mixed Commodities.

34.2.3.1 Protection requirements shall not be based on the overall commodity mix in a fire area.

34.2.3.2 Unless the requirements of 34.2.3.3 or 34.2.3.4 are met, mixed commodity storage shall be protected by the requirements for the highest classified commodity and storage arrangement.

34.2.3.3 The protection requirements for the lower commodity class shall be permitted to be utilized where all of the following are met:

(1) Up to 10 pallet loads of a higher hazard commodity, as described in 34.2.5 and 34.2.6, shall be permitted to be present in an area not exceeding 40,000 ft^2 (3716 m^2).
(2) The higher hazard commodity shall be randomly dispersed with no adjacent loads in any direction, including diagonally.
(3) Where the ceiling protection is based on Class I or Class II commodities, the allowable number of pallet loads for Class IV or Group A plastics shall be reduced to five.

34.2.3.4 The protection requirements for the lower commodity class shall be permitted to be utilized in the area of lower commodity class, where the higher hazard material is confined to a designated area and the area is protected to the higher hazard in accordance with the requirements of this *Code*.

34.2.4 Pallet Types.

34.2.4.1 When loads are palletized, the use of wooden or metal pallets shall be assumed in the classification of commodities.

34.2.4.2 For Class I through Class IV, when unreinforced polypropylene or high-density polyethylene plastic pallets are used, the classification of the commodity unit shall be increased one class (e.g., Class III becomes Class IV and Class IV becomes cartoned unexpanded Group A plastics).

34.2.4.3 For Class I through Class IV, when reinforced polypropylene or high-density polyethylene plastic pallets are used, the classification of the commodity unit shall be increased two classes (e.g., Class II becomes Class IV and Class III becomes cartoned unexpanded Group A plastics).

34.2.4.3.1 Reinforced polypropylene or reinforced high-density polyethylene plastic pallets shall be marked with a molded symbol to indicate that the pallet is reinforced.

34.2.4.4 For Class I through Class IV, when other than polypropylene or high-density polyethylene plastic pallets are used, the classification of the commodity unit shall be determined by specific testing conducted by a national testing laboratory or shall be increased two classes.

34.2.4.5 No increase in the commodity classification shall be required for Group A plastic commodities stored on plastic pallets.

34.2.4.6 For ceiling-only sprinkler protection, the requirements of 34.2.4.2 and 34.2.4.3 shall not apply where plastic pallets are used and where the sprinkler system uses spray sprinklers with a K-factor of 16.8.

34.2.4.7 The requirements of 34.2.4.2 through 34.2.4.4 shall not apply to nonwood pallets that have demonstrated a fire hazard that is equal to or less than wood pallets and are listed as such.

34.2.5 Commodity Classes.

34.2.5.1 Class I. A noncombustible product that meets one of the following criteria shall be classified as a Class I commodity:

(1) Placed directly on wooden pallets
(2) Placed in single-layer corrugated cartons, with or without single-thickness cardboard dividers, with or without pallets
(3) Shrink-wrapped or paper-wrapped as a unit load with or without pallets

34.2.5.2 Class II. A noncombustible product that is in slatted wooden crates, solid wood boxes, multiple-layered corrugated cartons, or equivalent combustible packaging material, with or without pallets shall be classified as a Class II commodity.

34.2.5.3 Class III.

34.2.5.3.1 A product fashioned from wood, paper, natural fibers, or Group C plastics with or without cartons, boxes, or crates and with or without pallets shall be classified as a Class III commodity.

34.2.5.3.2 A Class III commodity shall be permitted to contain a limited amount (5 percent by weight or volume or less) of Group A or Group B plastics.

34.2.5.4 Class IV.

34.2.5.4.1 A product, with or without pallets, that meets one of the following criteria shall be classified as a Class IV commodity:

(1) Constructed partially or totally of Group B plastics
(2) Consists of free-flowing Group A plastic materials
(3) Contains within itself or its packaging an appreciable amount (5 percent to 15 percent by weight or 5 percent to 25 percent by volume) of Group A plastics

34.2.5.4.2 The remaining materials shall be permitted to be metal, wood, paper, natural or synthetic fibers, or Group B or Group C plastics.

34.2.6 Classification of Plastics, Elastomers, and Rubber. Plastics, elastomers, and rubber shall be classified as Group A, Group B, or Group C plastics.

34.2.6.1 Group A. The following materials shall be classified as Group A:

(1) ABS (acrylonitrile-butadiene-styrene copolymer)
(2) Acetal (polyformaldehyde)
(3) Acrylic (polymethyl methacrylate)
(4) Butyl rubber
(5) EPDM (ethylene-propylene rubber)
(6) RP (fiberglass-reinforced polyester)
(7) Natural rubber (if expanded)
(8) Nitrile-rubber (acrylonitrile-butadiene rubber)
(9) PET (thermoplastic polyester)
(10) Polybutadiene
(11) Polycarbonate
(12) Polyester elastomer
(13) Polyethylene
(14) Polypropylene
(15) Polystyrene
(16) Polyurethane
(17) PVC (polyvinyl chloride — highly plasticized, with plasticizer content greater than 20 percent) (rarely found)
(18) SAN (styrene acrylonitrile)
(19) SBR (styrene-butadiene rubber)

34.2.6.2 Group B. The following materials shall be classified as Group B:

(1) Cellulosics (cellulose acetate, cellulose acetate butyrate, ethyl cellulose)
(2) Chloroprene rubber
(3) Fluoroplastics (ECTFE — ethylene-chlorotrifluoro-ethylene copolymer; ETFE — ethylene-tetrafluoroethylene copolymer; FEP — fluorinated ethylene-propylene copolymer)
(4) Natural rubber (not expanded)
(5) Nylon (nylon 6, nylon 6/6)
(6) Silicone rubber

34.2.6.3 Group C. The following materials shall be classified as Group C:

(1) Fluoroplastics (PCTFE — polychlorotrifluoroethylene; PTFE — polytetrafluoroethylene)
(2) Melamine (melamine formaldehyde)
(3) Phenolic
(4) PVC (polyvinyl chloride — flexible, PVCs with plasticizer content up to 20 percent)
(5) PVDC (polyvinylidene chloride)
(6) PVDF (polyvinylidene fluoride)
(7) PVF (polyvinyl fluoride)
(8) Urea (urea formaldehyde)

34.2.7* Classification of Rolled Paper Storage. For the purposes of this *Code*, the classifications of paper described in 34.2.7.1 through 34.2.7.4 shall apply and be used to determine the fire protection design criteria.

34.2.7.1 Heavyweight Class. Paperboard and paper stock having a basis weight [weight per 1000 ft^2 (92.9 m^2)] of 20 lb (9.1 kg) or greater shall be classified as heavyweight.

34.2.7.2 Mediumweight Class. All the broad range of papers having a basis weight [weight per 1000 ft^2 (92.9 m^2)] of 10 lb to 20 lb (4.5 kg to 9.1 kg) shall be classified as mediumweight.

34.2.7.3 Lightweight Class. All papers having a basis weight [weight per 1000 ft^2 (92.9 m^2)] of less than 10 lb (4.5 kg) shall be classified as lightweight.

34.2.7.4 Tissue.

34.2.7.4.1 The broad range of papers of characteristic gauzy texture, which, in some cases, are fairly transparent, shall be classified as tissue.

34.2.7.4.2 For the purposes of this *Code*, tissue shall include the soft, absorbent type, regardless of basis weight; specifically, crepe wadding and the sanitary class including facial tissue, paper napkins, bathroom tissue, and toweling.

34.3 Building Construction.

34.3.1* Construction Type. Buildings used for storage of materials that are stored and protected in accordance with this chapter shall be permitted to be of any of the types described in NFPA 220, *Standard on Types of Building Construction.*

34.3.2 Fire-Fighting Access. Access shall be provided to all portions of the premises for fire-fighting purposes.

34.3.3* Emergency Smoke and Heat Venting.

34.3.3.1 Protection outlined in this chapter shall apply to buildings with or without smoke and heat vents.

34.3.3.2 Protection outlined in this chapter shall apply to buildings with or without draft curtains.

34.3.3.3 Where local codes require smoke and heat vents in buildings protected by early suppression fast response (ESFR) sprinklers, the vents shall be manually operated or have an operating mechanism with a standard response fusible element rated not less than 360°F (182°C).

34.4 Storage Arrangement.

34.4.1* Piling Procedures and Precautions.

34.4.1.1 Any commodities that are hazardous in combination with each other shall be stored so they cannot come into contact with each other.

34.4.1.2 Safe floor loads shall not be exceeded.

34.4.1.3 Where storing water-absorbent commodities, normal floor loads shall be reduced to take into account the added weight of water that can be absorbed during fire-fighting operations.

34.4.2 Commodity Clearance.

34.4.2.1 The clearance between top of storage and sprinkler deflectors shall conform to NFPA 13.

34.4.2.2* If the commodity is stored above the lower chord of roof trusses, not less than 1 ft (0.3 m) of clear space shall be

maintained to allow wetting of the truss, unless the truss is protected with 1-hour fireproofing.

34.4.2.3 Storage clearance from ducts shall be maintained in accordance with NFPA 91, *Standard for Exhaust Systems for Air Conveying of Vapors, Gases, Mists, and Noncombustible Particulate Solids.*

34.4.2.4 The clearance between stored materials and unit heaters, radiant space heaters, duct furnaces, and flues shall not be less than 3 ft (0.9 m) in all directions or shall be in accordance with the clearances shown on the approval agency label.

34.4.2.5* Clearance shall be maintained to lights or light fixtures to prevent ignition.

34.4.2.6 Clearance shall be maintained around the path of fire door travel to ensure the door's proper operation and inspection.

34.4.2.7 Operation and inspection clearance shall be maintained around fire-extinguishing and fire protection equipment.

34.4.3 Aisles.

34.4.3.1 For the storage of commodities that expand with the absorption of water, such as roll paper, wall aisles not less than 24 in. (0.6 m) wide shall be provided.

34.4.3.2 Aisles shall be maintained to retard the transfer of fire from one pile to another and to allow convenient access for fire fighting, salvage, and removal of storage.

34.4.4 Flammable and Combustible Liquids.

34.4.4.1 Flammable or combustible liquids shall be kept in flammable liquid storage cabinets, in cutoff rooms, or in detached buildings.

34.4.4.2 Protection shall be in accordance with Chapter 66.

34.5 General Fire Protection.

34.5.1* Sprinkler Systems. Sprinkler systems installed in buildings used for storage shall be in accordance with NFPA 13.

34.5.2 High-Expansion Foam.

34.5.2.1 High-expansion foam systems installed in addition to automatic sprinklers shall be installed in accordance with NFPA 11, *Standard for Low-, Medium-, and High-Expansion Foam,* except where modified by other requirements in this chapter.

34.5.2.2 High-expansion foam used to protect idle pallets shall have a fill time of not more than 4 minutes.

34.5.2.3 High-expansion foam systems shall be automatic in operation.

34.5.2.4 Detectors for high-expansion foam systems shall be listed and shall be installed at the ceiling at not more than one-half the listed spacing in accordance with *NFPA 72.*

34.5.2.5 Detection systems, concentrate pumps, generators, and other system components essential to the operation of the system shall have an approved standby power source.

34.5.3 Manual Protection.

34.5.3.1 Portable Fire Extinguishers.

34.5.3.1.1 Portable fire extinguishers shall be provided in accordance with Section 13.6, unless 34.5.3.1.2 applies.

34.5.3.1.2 Where 1½ in. (38 mm) hose lines are available to reach all portions of areas with Class A fire loads, up to one-half of the portable fire extinguishers required by Section 13.6 shall be permitted to be omitted.

34.5.3.2 Hydrants. At locations without public hydrants, or where hydrants are not within 250 ft (75 m), private hydrants shall be installed in accordance with NFPA 24.

34.5.4 Fire Organization.

34.5.4.1 Arrangements shall be made to allow rapid entry into the premises by the municipal fire department, police department, or other authorized personnel in case of fire or other emergency.

34.5.4.2* Due to the unique nature of storage fires and the hazards associated with fighting such fires, facility emergency personnel shall be trained to have knowledge of the following:

(1) Pile and building collapse potential during fire-fighting and mop-up operations due to sprinkler water absorption, use of hose streams, and the undermining of piles by fire that is likely to cause material or piles to fall (especially roll tissue paper), resulting in injury
(2) Operation of sprinkler systems and water supply equipment
(3) Location of the controlling sprinkler valves so that the correct sprinkler system can be turned on or off as necessary
(4) Correct operation of emergency smoke and heat vent systems where they have been provided
(5) Use of material-handling equipment while sprinklers are operating to effect final extinguishment
(6) Procedure for summoning outside aid immediately in an emergency
(7) Maintenance of the security features of the premises
(8) Operation of foam systems, evacuation procedures, and safety precautions during all foam operations

34.5.4.3 A fire watch shall be maintained when the sprinkler system is not in service.

34.5.5 Alarm Service.

34.5.5.1 Automatic sprinkler systems and foam systems, where provided, shall have approved central station, auxiliary, remote station, or proprietary waterflow alarm service unless otherwise permitted by 34.5.5.1.1 or 34.5.5.1.2.

34.5.5.1.1 Local waterflow alarm service shall be permitted when recorded guard service also is provided.

34.5.5.1.2 Local waterflow alarm service shall be permitted where the storage facilities are occupied on a 24-hour basis.

34.5.5.2 Alarm service shall comply with *NFPA 72.*

34.5.6 Security Service. Security service, where provided, shall comply with NFPA 601, *Standard for Security Services in Fire Loss Prevention.*

34.6 Building Equipment, Maintenance, and Operations.

34.6.1 Industrial Trucks.

34.6.1.1 Power-operated industrial trucks and their use shall comply with NFPA 505, *Fire Safety Standard for Powered Industrial Trucks Including Type Designations, Areas of Use, Conversions, Maintenance, and Operations.*

34.6.1.2 Industrial trucks using liquefied petroleum gas (LP-Gas) or liquid fuel shall be refueled outside of the storage building at a location designated for the purpose.

34.6.2 Building Service Equipment. Electrical equipment shall be installed in accordance with the provisions of Section 11.1.

34.6.3 Cutting and Welding Operations.

34.6.3.1 Where welding or cutting operations are necessary, the requirements of Chapter 41 shall apply.

34.6.3.2* Welding, soldering, brazing, and cutting shall be permitted to be performed on building components or contents that cannot be removed, provided that no storage is located below and within 25 ft (7.6 m) of the working area and flameproof tarpaulins enclose the area.

34.6.3.3 During any of the operations identified in 34.6.3.2, all of the following shall apply:

(1) The sprinkler system shall be in service.
(2) Extinguishers suitable for Class A fires with a minimum rating of 2A shall be located in the working area.
(3) Where inside hose lines are available, charged and attended inside hose lines shall be located in the working area.
(4) A fire watch shall be maintained during the operations specified in 34.6.3.2 and for not less than 30 minutes following completion of open-flame operation.

34.6.4 Waste Disposal.

34.6.4.1 Approved containers for rubbish and other trash materials shall be provided.

34.6.4.2 Rubbish, trash, and other waste material shall be disposed of at regular intervals.

34.6.5 Smoking.

34.6.5.1 Smoking shall be prohibited except in locations designated as smoking areas.

34.6.5.2 Signs that read "No Smoking" shall be posted in prohibited areas.

34.6.6* Maintenance and Inspection.

34.6.6.1 Fire walls, fire doors, and floors shall be maintained in functional condition at all times.

34.6.6.2* All water-based fire protection systems and the water supplies shall be inspected, tested, and maintained in accordance with NFPA 25.

34.6.7 Refrigeration Systems. Refrigeration systems, if used, shall be in accordance with ASHRAE 15, *Safety Code for Mechanical Refrigeration.*

34.6.8 Lighting. Where metal halide lighting is installed, it shall be selected, installed, and maintained such that catastrophic failure of the bulb shall not ignite materials below.

34.7 Protection of Rack Storage.

34.7.1* Application. Section 34.7 shall apply to the indoor storage of normal combustibles (Class I through Class IV) and plastics that are stored on racks.

34.7.2 Building Construction.

34.7.2.1 Fire protection of roof steel shall not be required when sprinkler systems are installed in accordance with NFPA 13.

34.7.2.2 Fire protection of steel building columns and vertical rack members that support the building shall not be required when ceiling sprinklers and in-rack sprinklers are installed in accordance with NFPA 13.

34.7.2.3 For sprinklered buildings with rack storage of over 15 ft (4.6 m) in height and only ceiling sprinklers installed, steel building columns within the rack structure and vertical rack members that support the building shall have a fire resistance rating not less than 1 hour, unless the installation meets the requirements of 12.3.1.7 in NFPA 13.

34.7.3 Storage Arrangement.

34.7.3.1* Rack Structure. Rack configurations shall be approved.

34.7.3.2* Rack Loading. Racks shall not be loaded beyond their design capacity.

34.7.3.3* Aisle Widths.

34.7.3.3.1 Aisle widths and depth of racks shall be determined by material-handling methods.

34.7.3.3.2 The width of aisles shall be considered in the design of the protection system.

34.7.3.3.3* Aisle widths shall be maintained by either fixed rack structures or control in placement of portable racks.

34.7.3.3.4 Any decrease in aisle width shall require a review of the adequacy of the protection system.

34.7.3.4 General Fire Protection.

34.7.3.4.1 High-Expansion Foam.

34.7.3.4.1.1* Where high-expansion foam systems are installed, they shall be automatic in operation and shall be in accordance with NFPA 11, except when modified by 34.7.3.4.

34.7.3.4.1.2 When high-expansion foam systems are used in combination with ceiling sprinklers, in-rack sprinklers shall not be required.

34.7.3.4.1.3 Detectors shall be listed and shall be installed in one of the following configurations:

(1) At one-half listed linear spacing [e.g., 15 ft × 15 ft (4.6 m × 4.6 m) rather than 30 ft × 30 ft (9.1 m × 9.1 m)] when the following conditions exist:
   (a) Detectors are installed at the ceiling only.
   (b) The clearance from the top of storage does not exceed 10 ft (3 m).
   (c) The height of storage does not exceed 25 ft (7.6 m).
(2) At the ceiling at listed spacing and on racks at alternate levels
(3) Where listed for rack storage installation and installed in accordance with ceiling detector listing to provide response within 1 minute after ignition using an ignition source equivalent to that used in a rack storage testing program

34.7.3.4.2 High-Expansion Foam Submergence.

34.7.3.4.2.1 The following requirements shall apply to storage of Class I, Class II, Class III, and Class IV commodities, as classified in Section 34.2, up to and including 25 ft (7.6 m) in height:

(1)*When high-expansion foam systems are used without sprinklers, the submergence time shall be not more than 5 minutes for Class I, Class II, or Class III commodities.
(2) When high-expansion foam systems are used without sprinklers, the submergence time shall be not more than 4 minutes for Class IV commodities.

(3) When high-expansion foam systems are used in combination with ceiling sprinklers, the submergence time shall be not more than 7 minutes for Class I, Class II, or Class III commodities.
(4) When high-expansion foam systems are used in combination with ceiling sprinklers, the submergence time shall be not more than 5 minutes for Class IV commodities.

34.7.3.4.2.2 The following requirements shall apply to storage of Class I, Class II, Class III, and Class IV commodities stored over 25 ft (7.6 m) high up to and including 35 ft (10.7 m) in height:

(1) Ceiling sprinklers shall be used in combination with the high-expansion foam system.
(2) The submergence time for the high-expansion foam shall be not more than 5 minutes for Class I, Class II, or Class III commodities.
(3) The submergence time for the high-expansion foam shall be not more than 4 minutes for Class IV commodities.

34.8 Protection of Rubber Tires.

34.8.1* Application.

34.8.1.1 Section 34.8 shall apply to new facilities with indoor storage of usable tires and to existing facilities being converted to the indoor storage of usable tires.

34.8.1.2 Existing buildings storing rubber tires shall be exempted from complying with Section 34.8.

34.8.1.3 This section shall not apply to scrap tire storage.

34.8.2 Building Arrangement.

34.8.2.1 Steel Columns. Steel columns shall be protected as follows unless protected in accordance with 12.3.1.7 of NFPA 13:

(1) For storage exceeding 15 ft to 20 ft (4.6 m to 6 m) in height, columns shall have 1-hour fireproofing.
(2) For storage exceeding 20 ft (6 m) in height, columns shall have 2-hour fireproofing for the entire length of the column, including connections with other structural members.

34.8.2.2 Fire Walls.

34.8.2.2.1 Four-hour fire walls shall be provided between the tire warehouse and tire manufacturing areas.

34.8.2.2.2 Fire walls shall be designed in accordance with NFPA 221, *Standard for Fire Walls and Fire Barrier Walls.*

34.8.2.3* Travel Distance to Exits. Travel distance to exits shall be in accordance with NFPA *101.*

34.8.3 Storage Arrangement.

34.8.3.1 Piling Procedures.

34.8.3.1.1* Piles that are not adjacent to or located along a wall shall be not more than 50 ft (15 m) in width.

34.8.3.1.2 Tires stored adjacent to or along one wall shall not extend more than 25 ft (7.6 m) from the wall.

34.8.3.1.3 Where tires are stored on-tread, the dimension of the pile in the direction of the wheel hole shall be not more than 50 ft (15 m).

34.8.3.1.4 The width of the main aisles between piles shall be not less than 8 ft (2.4 m).

34.8.3.2 Clearances.

34.8.3.2.1 Storage clearance from roof structures shall be not less than 18 in. (470 mm) in all directions.

34.8.3.2.2 A clearance of not less than 24 in. (610 mm) shall be maintained around the path of fire door travel unless a barricade is provided.

34.8.3.2.3 Where protection in accordance with this chapter is provided, stored tires shall be segregated from other combustible storage by aisles not less than 8 ft (2.4 m) wide.

34.9 Protection of Roll Paper.

34.9.1 Application. Section 34.9 shall apply to new facilities with indoor storage of roll paper, and to existing facilities being converted to the indoor storage of roll paper, except for the following types of roll paper:

(1) Waxed paper
(2) Synthetic paper
(3) Palletized roll paper storage other than that stored on a single floor pallet or raised floor platform

34.9.2* Building Construction. The protection outlined in Section 34.9 shall apply to buildings with or without fireproofing or other modes of steel protection, unless modified by the requirements of 34.4.2.2.

34.9.3 Storage Arrangement. The floor load design shall take into account the added weight of water that could be absorbed by the commodity during fire-fighting operations.

34.10 Storage of Idle Pallets.

34.10.1* General. Idle pallets shall be stored outside or in a separate building designated for pallet storage, unless permitted by 34.10.2.

34.10.2 Indoor Storage. Idle pallets shall be permitted to be stored in a building used for other storage or other purpose if the building is sprinklered in accordance with NFPA 13.

34.10.3* Outdoor Storage. Idle pallets stored outside shall be stored in accordance with Table 34.10.3(a) and Table 34.10.3(b).

Table 34.10.3(a) Required Clearance Between Outside Idle Pallet Storage and Other Yard Storage

	Minimum Distance	
Pile Size	ft	m
Under 50 pallets	20	6
50–200 pallets	30	9
Over 200 pallets	50	15

34.10.4 Idle pallet stacks shall not exceed 15 ft (4.6 m) in height nor shall cover an area of greater than 400 ft^2 (37 m^2). Pallet stacks shall be arranged to form stable piles. A distance of not less than 8 ft (2.4 m) shall separate stacks. Piles shall be no closer than 8 ft (2.4 m) to any property line.

Table 34.10.3(b) Required Clearance Between Outside Idle Pallet Storage and Building

	Minimum Distance of Wall from Storage					
	Under 50 Pallets		50 to 200 Pallets		Over 200 Pallets	
Wall Construction	ft	m	ft	m	ft	m
Masonry with no openings	0	0	0	0	15	4.6
Masonry with wired glass in openings, outside sprinklers, and 1-hour doors	0	0	10	3	20	6
Masonry with wired or plain glass, outside sprinklers, and ¾-hour doors	10	3	20	6	30	9
Wood or metal with outside sprinklers	10	3	20	6	30	9
Wood, metal, or other	20	6	30	9	50	15

Chapter 35 Reserved

Chapter 36 Reserved

Chapter 37 Reserved

Chapter 38 Reserved

Chapter 39 Reserved

Chapter 40 Dust Explosion Prevention

40.1 General. Equipment, processes, and operations that involve the manufacture, processing, blending, repackaging, or handling of combustible particulate solids or combustible dusts regardless of concentration or particle size shall be installed and maintained in accordance with the following standards as applicable:

(1) NFPA 61, *Standard for the Prevention of Fires and Dust Explosions in Agricultural and Food Processing Facilities*
(2) NFPA 69, *Standard on Explosion Prevention Systems*
(3) NFPA 85, *Boiler and Combustion Systems Hazards Code*
(4) NFPA 120, *Standard for Fire Prevention and Control in Coal Mines*
(5) NFPA 484, *Standard for Combustible Metals*
(6) NFPA 654, *Standard for the Prevention of Fire and Dust Explosions from the Manufacturing, Processing, and Handling of Combustible Particulate Solids*
(7) NFPA 655, *Standard for Prevention of Sulfur Fires and Explosions*
(8) NFPA 664, *Standard for the Prevention of Fires and Explosions in Wood Processing and Woodworking Facilities*

40.2 Permits. Permits, where required, shall comply with Section 1.12.

Chapter 41 Hot Work Operations

41.1 General.

41.1.1 Hot work shall comply with NFPA 51B, *Standard for Fire Prevention During Welding, Cutting, and Other Hot Work*, and this chapter.

41.1.2 Chapter 41 shall apply to the following hot work processes:

(1) Welding and allied processes
(2) Heat treating
(3) Grinding
(4) Thawing pipe
(5) Powder-driven fasteners
(6) Hot riveting
(7) *Torch-applied roofing in conjunction with the requirements of Section 16.6
(8) Similar applications producing or using a spark, flame, or heat [**51B:**1.3.1]

41.1.3 Chapter 41 shall not apply to the following:

(1) Candles
(2) Pyrotechnics or special effects
(3) Cooking operations
(4) Electric soldering irons
(5) Design and installation of gas cutting equipment and welding equipment covered in NFPA 51, *Standard for the Design and Installation of Oxygen–Fuel Gas Systems for Welding, Cutting, and Allied Processes*
(6) Additional requirements for hot work operations in confined spaces
(7) Lockout/tagout procedures during hot work [**51B:**1.3.2]

41.1.4 Acetylene cylinder charging plants shall comply with NFPA 51A, *Standard for Acetylene Cylinder Charging Plants.*

41.1.5 Permits.

41.1.5.1 Permits, where required, shall comply with Section 1.12.

41.1.5.2 Where an approved facility hot work permit program exists that meets the requirements of Chapter 41, the permit shall be permitted to be issued for an entire facility.

41.2 Responsibility for Hot Work.

41.2.1* Management. Management or a designated agent shall be responsible for the safe operations of hot work activity. [51B:4.1]

41.2.1.1 Management shall establish permissible areas for hot work. [51B:4.1.1]

41.2.1.2 Management shall designate a permit authorizing individual (PAI). [51B:4.1.2]

41.2.1.3 All equipment shall be examined to ensure it is in a safe operating condition. [51B:4.1.3]

41.2.1.4 When found to be incapable of reliable safe operation, the equipment shall be repaired by qualified personnel prior to its next use or be withdrawn from service. [51B:4.1.4]

41.2.1.5 Management shall ensure that only approved apparatus, such as torches, manifolds, regulators or pressure-reducing valves, and acetylene generators, are used. [51B:4.1.5]

41.2.1.6 Management shall ensure that all individuals involved in the hot work operations, including contractors, are familiar with the provisions of Chapter 41. [51B:4.1.6]

41.2.1.6.1 Individuals involved in hot work operations shall be trained in the safe operation of their equipment and in the safe use of the process. [51B:4.1.6.1]

41.2.1.6.2 Individuals involved in hot work operations shall have an awareness of the inherent risks involved and understand the emergency procedures in the event of a fire. [51B:4.1.6.2]

41.2.1.7 Management shall advise all contractors about site-specific flammable materials, hazardous processes or conditions, or other potential fire hazards. [51B:4.1.7]

41.2.2 Permit Authorizing Individual (PAI). In conjunction with management, the PAI shall be responsible for the safe operation of hot work activities. [51B:4.2]

41.2.2.1 The PAI shall determine site-specific flammable materials, hazardous processes, or other potential fire hazards that are present or likely to be present in the work location. [51B:4.2.1]

41.2.2.2 The PAI shall ensure the protection of combustibles from ignition by the following means:

(1) Moving the work to a location that is free from combustibles
(2) If the work cannot be moved, moving the combustibles to a safe distance or having the combustibles properly shielded against ignition
(3) Scheduling hot work so that operations that could expose combustibles to ignition are not begun during hot work operations [51B:4.2.2]

41.2.2.3* If the criteria of 41.2.2.2(1), (2), or (3) cannot be met, hot work shall not be performed. [51B:4.2.3]

41.2.2.4 The PAI shall determine that fire protection and extinguishing equipment are properly located at the site. [51B:4.2.4]

41.2.2.5 Where a fire watch is required *(see 41.3.4)*, the PAI shall be responsible for ensuring that a fire watch is at the site. [51B:4.2.5]

41.2.2.6* Where a fire watch is not required, the PAI shall make a final check ½ hour after the completion of hot work operations to detect and extinguish smoldering fires. [51B:4.2.6]

41.2.3 Hot Work Operator. The hot work operator shall handle equipment safely and use it as follows so as not to endanger lives and property:

(1) The operator shall have the PAI's approval before starting hot work operations.
(2) All equipment shall be examined to ensure it is in a safe operating condition, and, if found to be incapable of reliable safe operation, the equipment shall be repaired by qualified personnel prior to its next use or be withdrawn from service.
(3) The operator shall cease hot work operations if unsafe conditions develop and shall notify management, the area supervisor, or the PAI for reassessment of the situation. [51B:4.3]

41.2.4 Fire Watch.

41.2.4.1* The fire watch shall be trained to understand the inherent hazards of the work site and of the hot work. [51B:4.4.1]

41.2.4.2 The fire watch shall ensure that safe conditions are maintained during hot work operations. [51B:4.4.2]

41.2.4.3 The fire watch shall have the authority to stop the hot work operations if unsafe conditions develop. [51B:4.4.3]

41.2.4.4* The fire watch shall have fire-extinguishing equipment readily available and shall be trained in its use. [51B:4.4.4]

41.2.4.5 The fire watch shall be familiar with the facilities and procedures for sounding an alarm in the event of a fire. [51B:4.4.5]

41.2.4.6 The fire watch shall watch for fires in all exposed areas and try to extinguish them only when the fires are obviously within the capacity of the equipment available. If the fire watch determines that the fire is not within the capacity of the equipment, the fire watch shall sound the alarm immediately. [51B:4.4.6]

41.2.4.7* The fire watch shall be permitted to perform additional tasks, but those tasks shall not distract him or her from his or her fire watch responsibilities, except as outlined in Section 41.4. [51B:4.4.7]

41.2.5 Mutual Responsibility. Management, contractors, the PAI, the fire watch, and the operators shall recognize their mutual responsibility for safety in hot work operations. [51B:4.5]

41.3 Fire Prevention Precautions.

41.3.1 Permissible Areas.

41.3.1.1 General. Hot work shall be permitted only in areas that are or have been made fire safe. [51B:5.1.1]

41.3.1.2 Designated or Permit-Required Areas. Hot work shall be performed in either designated areas or permit-required areas. [51B:5.1.2]

41.3.1.2.1 Designated Areas. A designated area shall be a specific area designed or approved for hot work, such as a maintenance shop or a detached outside location that is of noncombustible or fire-resistive construction, essentially free of combustible and flammable contents, and suitably segregated from adjacent areas. [51B:5.1.2.1]

41.3.1.2.2 Permit-Required Areas.

41.3.1.2.2.1 A permit-required area shall be an area that is made fire safe by removing or protecting combustibles from ignition sources. [**51B:**5.1.2.2.1]

41.3.1.2.2.2 Signs shall be posted designating hot work areas as deemed necessary by the PAI. [**51B:**5.1.2.2.2]

41.3.2* Nonpermissible Areas. Hot work shall not be permitted in the following areas:

(1) In areas not authorized by management
(2) In sprinklered buildings where sprinklers are impaired, unless the requirements of NFPA 25 are met
(3) In the presence of explosive atmospheres (i.e., where mixtures of flammable gases, vapors, liquids, or dusts with air exist)
(4) In the presence of uncleaned or improperly prepared drums, tanks, or other containers and equipment that have previously contained materials that could develop explosive atmospheres
(5) In areas with an accumulation of combustible dusts that could develop explosive atmospheres [**51B:**5.2]

41.3.3* Hot Work Permit.

41.3.3.1* Before hot work operations begin in a nondesignated location, a written hot work permit by the permit authorizing individual (PAI) shall be required. [**51B:**5.3.1]

41.3.3.2 Before a hot work permit is issued, the following conditions shall be verified by the PAI:

(1) The hot work equipment to be used shall be in satisfactory operating condition and in good repair.
(2) Where combustible materials, such as paper clippings, wood shavings, or textile fibers, are on the floor, the floor shall be swept clean for a radius of 35 ft (11 m) and the following criteria also shall be met:
   (a) Combustible floors (except wood on concrete) shall be kept wet, covered with damp sand, or protected by noncombustible or fire-retardant shields.
   (b) Where floors have been wet down, personnel operating arc welding equipment or cutting equipment shall be protected from possible shock.
(3)*All combustibles shall be relocated at least 35 ft (11 m) in all directions from the work site and the following criteria also shall be met:
   (a) If relocation is impractical, combustibles shall be protected with fire-retardant covers or otherwise shielded with metal or fire-retardant guards or curtains.
   (b) The edges of covers at the floor shall be tight to prevent the entrance of sparks, including at the point at which several covers overlap where a large pile is being protected.
(4) Openings or cracks in walls, floors, or ducts within 35 ft (11 m) of the site shall be tightly covered with fire-retardant or noncombustible material to prevent the passage of sparks to adjacent areas.
(5) Ducts and conveyor systems that might carry sparks to distant combustibles shall be shielded, or shut down, or both.
(6) If hot work is done near walls, partitions, ceilings, or roofs of combustible construction, fire-retardant shields or guards shall be provided to prevent ignition.
(7) If hot work is done on one side of a wall, partition, ceiling, or roof, one of the following criteria shall be met:
   (a) Precautions shall be taken to prevent ignition of combustibles on the other side by relocating the combustibles.
   (b) If it is impractical to relocate combustibles, a fire watch shall be provided on the side opposite from where the work is being performed.
(8) Hot work shall not be attempted on a partition, wall, ceiling, or roof that has a combustible covering or insulation, or on walls or partitions of combustible sandwich-type panel construction.
(9) Hot work that is performed on pipes or other metal that is in contact with combustible walls, partitions, ceilings, roofs, or other combustibles, shall not be undertaken if the work is close enough to cause ignition by conduction.
(10) Fully charged and operable fire extinguishers that are appropriate for the type of possible fire shall be available immediately at the work area.
(11) If existing hose lines are located within the hot work area defined by the permit, they shall be connected and ready for service but shall not be required to be unrolled or charged.
(12) The following shall apply to hot work done in close proximity to a sprinkler head:
   (a) A wet rag shall be laid over the sprinkler head and then removed at the conclusion of the welding or cutting operation.
   (b) During hot work, special precautions shall be taken to avoid accidental operation of automatic fire detection or suppression systems (e.g., special extinguishing systems or sprinklers).
(13) Nearby personnel shall be suitably protected against dangers such as heat, sparks, and slag. [**51B:**5.3.2]

41.3.3.3* Based on local conditions, the PAI shall determine the length of the period for which the hot work permit is valid. [**51B:**5.3.3]

41.3.3.4* The area shall be inspected by the PAI at least once per day while the hot work permit is in effect to ensure that it is a fire-safe area. [**51B:**5.3.4]

41.3.4 Fire Watch.

41.3.4.1* A fire watch shall be required by the PAI when hot work is performed in a location where other than a minor fire might develop or where the following conditions exist:

(1)*Combustible materials in building construction or contents are closer than 35 ft (11 m) to the point of operation.
(2) Combustible materials are more than 35 ft (11 m) away from the point of operation but are easily ignited by sparks.
(3) Wall or floor openings within an 35-ft (11-m) radius expose combustible materials in adjacent areas, including concealed spaces in walls or floors.
(4) Combustible materials are adjacent to the opposite side of partitions, walls, ceilings, or roofs and are likely to be ignited. [**51B:**5.4.1]

41.3.4.2* A fire watch shall be maintained for at least ½ hour after completion of hot work operations in order to detect and extinguish smoldering fires. [**51B:**5.4.2]

41.3.4.3* More than one fire watch shall be required if combustible materials that could be ignited by the hot work operation cannot be directly observed by the initial fire watch. [**51B:**5.4.3]

41.3.5* Hot Tapping. Hot tapping or other cutting and welding on a flammable gas or liquid transmission or distribution utility pipeline shall be performed by a crew that is qualified to make hot taps. [51B:5.5]

41.3.6 Cylinders. Cylinder use and storage shall be in accordance with Chapter 63. [51B:5.6]

41.3.7* Personal Protective Clothing. Clothing shall be selected to minimize the potential for ignition, burning, trapping hot sparks, or electric shock. [51B:5.7]

41.4 Sole Proprietors and Individual Operators.

41.4.1* Assignment of PAI and Fire Watch. In a site where hot work operations are not under the control of another authority, the individual hot work operator shall be permitted to serve as PAI and fire watch, provided that the operator is trained and follows the provisions of Chapter 41. [51B:6.1]

41.4.2 Written Hot Work Permit. A checklist shall be permitted to serve as the written hot work permit. [51B:6.2]

41.5 Public Exhibitions and Demonstrations.

41.5.1 Application. The provisions of Section 41.5 shall apply to oxy–fuel gas welding and cutting operations at public exhibitions, demonstrations, displays, and trade shows, referred to hereinafter as the "site," in order to promote the safe use of compressed gases in public gatherings. [51B:7.1]

41.5.2 Supervision. Installation and operation of welding, cutting, and related equipment shall be done by, or under the supervision of, a competent operator, to ensure the personal protection of viewers and demonstrators as well as the protection from fire of materials in and around the site and the building itself. [51B:7.2]

41.5.3 Site.

41.5.3.1 Location. Sites involving the use and storage of compressed gases shall be located so as not to interfere with egress during an emergency. [51B:7.3.1]

41.5.3.2 Design. The site shall be constructed, equipped, and operated in such a manner that the demonstration minimizes the possibility of injury to viewers. [51B:7.3.2]

41.5.4 Fire Protection.

41.5.4.1 Fire Extinguishers. Each site shall be provided with a portable fire extinguisher of appropriate size and type and with a pail of water. [51B:7.4.1]

41.5.4.2 Shielding. The public, combustible materials, and compressed gas cylinders at the site shall be protected from flames, sparks, and molten metal. [51B:7.4.2]

41.5.4.3 Fire Department Notification. The fire department shall be notified in advance of the use of a site for public exhibitions, demonstrations, and trade shows. [51B:7.4.3]

41.5.5 Cylinders.

41.5.5.1 Gas Capacity Limitation.

41.5.5.1.1 Cylinders containing compressed gases for use at the site shall not be charged in excess of one-half their maximum permissible content. [51B:7.5.1.1]

41.5.5.1.2 Cylinders of nonliquefied gases and acetylene shall be charged to not more than one-half their maximum permissible charged gauge pressure (psi or kPa). [51B:7.5.1.2]

41.5.5.1.3 Cylinders of liquefied gases shall be charged to not more than one-half the maximum permissible capacity in pounds (kilograms). [51B:7.5.1.3]

41.5.5.2 Storage.

41.5.5.2.1 Cylinders located at the site shall be connected for use. [51B:7.5.2.1]

41.5.5.2.2 A sufficient number of additional cylinders shall be permitted to be stored at the site to furnish approximately one day's consumption of each gas used. [51B:7.5.2.2]

41.5.5.2.3* Other cylinders shall be stored in an approved storage area, but not near a building exit. [51B:7.5.2.3]

41.5.5.3 Transporting Cylinders. Cylinders in excess of 40 lb (18 kg) total weight being transported to or from the site shall be carried on a hand truck or motorized truck. [51B:7.5.3]

41.5.5.4 Process Hose. Process hose shall be located and protected so that they will not be physically damaged. [51B:7.5.4]

41.5.5.5 Cylinder Valves. Cylinder valves shall be closed when equipment is unattended. [51B:7.5.5]

41.5.5.6 Valve Caps. If cylinders are designed to be equipped with valve protection caps, such caps shall be in place, except when the cylinders are in service or are connected and ready for service. [51B:7.5.6]

41.5.5.7 Cylinder Protection. Cylinders shall be secured so that they cannot be knocked over. [51B:7.5.7]

41.6 Arc Welding Equipment.

41.6.1 Installation. Electrical equipment shall be of an approved type and shall be installed and used in accordance with Section 11.1 and manufacturers' requirements.

41.6.2 Damaged cables shall be removed from service until repaired or replaced.

Chapter 42 Refueling

42.1 General. Chapter 42 shall apply to refueling of automotive vehicles, marine vessels, and aircraft.

42.2 Automotive Fuel Servicing.

42.2.1 Applicability.

42.2.1.1 New and existing automotive service stations, service stations located inside buildings, and fleet vehicle service stations as well as the refueling processes at these facilities shall comply with NFPA 30A, *Code for Motor Fuel Dispensing Facilities and Repair Garages*, and Section 42.2. *(For repair garages, see Chapter 30.)*

42.2.1.2 If approved by the AHJ, mobile fleet fueling at commercial, industrial, and governmental sites shall be conducted in accordance with 42.2.7.6.

42.2.1.3* Section 42.2 shall not apply to those motor fuel dispensing facilities where only liquefied petroleum gas (LP-Gas), liquefied natural gas (LNG), or compressed natural gas (CNG) is dispensed as motor fuel. [30A:1.1.2]

42.2.2 General Requirements.

42.2.2.1 Permits. Permits, where required, shall comply with Section 1.12.

42.2.2.2 Plans and Specifications. Plans and specifications shall be submitted for review and approval prior to the installation or construction of a motor vehicle fuel dispensing station.

42.2.2.2.1 A site plan shall be submitted that illustrates the location of flammable and combustible liquid, LPG or CNG storage vessels, and their spatial relation to each other, property lines, and building openings.

42.2.2.2.2 Aboveground and underground storage vessels shall be shown on plans.

42.2.2.2.3 For each type of fuel dispensing facility, plans and specifications shall also include, but not be limited to, the following:

(1) Type and design of underground and aboveground liquid storage tanks
(2) Quantity and types of liquids to be stored
(3) Location and design of the fuel dispensers and dispenser nozzles
(4) Distances from dispensers to tanks, property lines, and buildings
(5) Vehicle access
(6) Fire appliances
(7) Vehicle impact protection
(8) Method of storage and dispensing
(9) Overfill prevention
(10) Spill containment
(11) Vents
(12) Vapor recovery
(13) Other equipment and accessories
(14) Seismic design in accordance with the building code
(15) Secondary containment
(16) Design and specifications for related piping, valves, and fittings
(17) Location and classification of electrical equipment, including emergency fuel shutdown devices
(18) Specifications for fuel storage and venting components
(19) Other information as required by the AHJ

42.2.3 Storage of Liquids.

42.2.3.1 Scope. Subsection 42.2.3 shall apply to the storage of liquid fuels and to the storage of related materials, such as lubricating oils and greases, cleaning solvents, and windshield washer solvents. [**30A:**4.1]

42.2.3.2 General Requirements.

42.2.3.2.1 Liquids shall be stored in the following:

(1) Approved closed containers that do not exceed 60 gal (227 L) capacity and are located outside buildings
(2) Tanks or approved closed containers located inside motor fuel dispensing facilities or repair garages
(3) Aboveground tanks, underground tanks, and containers in accordance with the requirements of 42.2.3.3
(4) Tanks supplying marine service stations in accordance with 42.3.2 [**30A:**4.2.1]

42.2.3.2.2 A motor fuel dispensing facility located at a bulk plant shall be separated from areas in which bulk plant operations are conducted by a fence or other approved barrier. Dispensing devices at the motor fuel dispensing facility shall not be supplied by aboveground tanks located in the bulk plant. Storage tanks at motor fuel dispensing facilities shall not be connected by piping to aboveground tanks located in the bulk plant. [**30A:**4.2.2]

42.2.3.2.3 Class I liquids shall not be stored or handled in a building that has a basement or pit into which ignitable vapors can travel, unless the basement or pit is provided with ventilation that will prevent the accumulation of vapors. The ventilation system shall be capable of providing at least 1 cfm of exhaust per ft^2 of floor area (0.3 $m^3/min/m^2$), but not less than 150 cfm (4 m^3/min). [**30A:**4.2.3]

42.2.3.2.4 Where tanks are at an elevation that produces a gravity head on the dispensing device, the tank outlet shall be equipped with a device, such as a normally closed solenoid valve, positioned adjacent to and downstream from the valve specified in 4.3.2.5.1 of NFPA 30 that is installed and adjusted so that liquid cannot flow by gravity from the tank if the piping or hose fails when the dispenser is not in use. [**30A:**4.2.4]

42.2.3.3 Storage of Liquids.

42.2.3.3.1 Underground Tanks. Underground storage tanks shall meet all applicable requirements of Chapter 4 and Chapter 5 of NFPA 30. [**30A:**4.3.1]

42.2.3.3.2* Aboveground Storage Tanks. Except as modified by the provisions of this paragraph, aboveground storage tanks shall meet all applicable requirements of Chapter 4 and Chapter 5 of NFPA 30. [**30A:**4.3.2]

42.2.3.3.2.1 The use of aboveground storage tanks at motor fuel dispensing facilities, fleet vehicle motor fuel dispensing facilities, and marine motor fuel dispensing facilities shall be permitted when installed in accordance with the requirements of this subsection and with all applicable requirements of Chapter 4 and Chapter 5 of NFPA 30 and, for tanks other than tanks in vaults, when the specific installation has been approved by the AHJ. [**30A:**4.3.2.1]

42.2.3.3.2.2 Tanks designed and built for underground use shall not be installed for aboveground use. [**30A:**4.3.2.2]

42.2.3.3.2.3 Tanks storing Class I and Class II liquids at an individual site shall be limited to a maximum individual capacity of 12,000 gal (45,400 L) and aggregate capacity of 48,000 gal (181,700 L) unless such tanks are installed in vaults complying with 42.2.3.4, in which case the maximum individual capacity shall be permitted to be 15,000 gal (57,000 L). [**30A:**4.3.2.3]

42.2.3.3.2.4 Tanks shall be located in accordance with Table 42.2.3.3.2.4. [**30A:**4.3.2.4]

42.2.3.3.2.5 The maximum individual tank capacity of 12,000 gal (45,400 L), where indicated in Table 42.2.3.3.2.4, shall be permitted to be increased to 20,000 gal (75,700 L) for Class II and Class III liquids at a fleet vehicle motor fuel dispensing facility and an aggregate capacity of 80,000 gal (304,000 L). [**30A:**4.3.2.5]

42.2.3.3.2.6 At fleet vehicle motor fuel dispensing facilities, no minimum separation shall be required between the dispensing device and a tank in a vault, a protected tank, or a fire-resistant tank. [**30A:**4.3.2.6]

42.2.3.3.2.7 The provisions of this paragraph shall not prohibit the dispensing of Class I and Class II liquids in the open from a fuel dispensing system supplied by an existing aboveground tank, not to exceed 6000 gal (22,710 L), located at commercial, industrial, government, or manufacturing establishments, and intended for fueling vehicles used in connection with their business. Such dispensing shall be permitted provided the following:

Table 42.2.3.3.2.4 Minimum Separation Requirements for Aboveground Tanks

Tank Type	Individual Tank Capacity (gal)[a]	Minimum Distance (ft)				
		From the Nearest Important Building on the Same Property	From Nearest Fuel Dispensing Device[b]	From Lot Line That Is or Can Be Built Upon, Including the Opposite Side of a Public Way	Distance from the Nearest Side of Any Public Way (ft)	Minimum Distance Between Tanks (ft)
Tanks in vaults[c]	0–15,000	0	0	0	0	Separate compartments required for each tank
Protected aboveground tanks	Less than or equal to 6,000	5	0	15	5	3
	6,001–12,000	15	0	25	15	3
Fire-resistant tanks	0–12,000	25	25	50	25	3
Other tanks meeting the requirements of NFPA 30	0–12,000	50	50	100	50	3

Note: For SI units, 1 ft = 0.30 m; 1 gal = 3.8 L.
[a]See 42.2.3.3.2.3 and 42.2.3.3.2.5.
[b]See 42.2.3.3.2.6.
[c]The separation distances given for vaults are measured from the outer perimeter of the vault.
[30A:Table 4.3.2.4]

(1) An inspection of the premises and operations has been made and approval has been granted by the AHJ.
(2) The tank is safeguarded against collision, spillage, and overfill to the satisfaction of the AHJ.
(3) The tank system is listed or approved for such aboveground use.
(4) The tank complies with requirements for emergency relief venting, the tank and dispensing system meet the electrical classification requirements of NFPA 30A, and the tank complies with the provisions of 42.2.3.2.4.
(5) The tank storage complies with Chapter 2 of NFPA 30. [30A:4.3.2.7]

42.2.3.3.2.8 Aboveground tanks shall be provided with spill control that meets the requirements of 42.2.3.3.2.3. Tank fill connections shall be provided with a noncombustible spill containment device.

Exception: Tanks installed in vaults that meet the requirements of 42.2.3.4 need not meet this requirement. [30A:4.3.2.8]

42.2.3.4 Vaults.

42.2.3.4.1 General. Aboveground tanks shall be permitted to be installed in vaults that meet the requirements of this subsection. Except as modified by the provisions of this subsection, aboveground storage tanks in vaults shall meet all applicable requirements of Chapter 4 and Chapter 5 of NFPA 30. Vaults shall be constructed and listed in accordance with UL 2245, *Standard for Below-Grade Vaults for Flammable Liquid Storage Tanks.* [30A:4.3.3.1]

42.2.3.4.1.1 Vaults shall be permitted to be either above or below grade. [30A:4.3.3.1.1]

42.2.3.5 Fire-Resistant Tanks.

42.2.3.5.1 Fire-resistant tanks shall be listed for the use intended and shall meet 42.2.3.5.2. [30A:4.3.4.1]

42.2.3.5.2 Subparagraph 4.2.5.2.5 of NFPA 30 shall not be used to reduce the size of the emergency vent. [30A:4.3.4.2]

42.2.3.6 Protected Aboveground Tanks. Protected aboveground tanks shall be listed and shall be tested in accordance with UL 2085, *Standard for Protected Aboveground Tanks for Flammable and Combustible Liquids.* Protected aboveground tanks shall also meet the requirements of 42.2.3.6.1 and 42.2.3.6.2. [30A:4.3.5]

42.2.3.6.1 The construction that provides the required fire-resistive protection shall prevent release of liquid, failure of the primary tank, failure of the supporting structure, and impairment of venting for a period of not less than 2 hours and shall limit the increase in temperature of the liquid inside the tank when tested using the fire exposure specified in UL 2085. [30A:4.3.5.1]

42.2.3.6.2 Subparagraph 4.2.5.2.5 of NFPA 30 shall not be used to reduce the size of the emergency vent. [30A:4.3.5.2]

42.2.3.7 Additional Requirements for All Aboveground Tanks.

42.2.3.7.1 All openings shall be located above the maximum liquid level. [30A:4.3.6.1]

42.2.3.7.2 Means shall be provided for determining the liquid level in each tank, and this means shall be accessible to the delivery operator. [30A:4.3.6.2]

42.2.3.7.3 Means shall be provided to sound an audible alarm when the liquid level in the tank reaches 90 percent of capacity. Means shall also be provided either to automatically stop the flow

of liquid into the tank when the liquid level in the tank reaches 98 percent capacity or to restrict the flow of liquid into the tank to a maximum flow rate of 2.5 gpm (9.5 L/min) when the liquid in the tank reaches 95 percent capacity. These provisions shall not restrict or interfere with the operation of either the normal vent or the emergency vent. [**30A:**4.3.6.3]

42.2.3.7.4 Means shall be provided to prevent the release of liquid by siphon flow. [**30A:**4.3.6.4]

42.2.3.7.5 Shutoff and check valves shall be equipped with a pressure-relieving device that will relieve the pressure generated by thermal expansion back to the tank. [**30A:**4.3.6.5]

42.2.3.7.6 Fuel shall not be dispensed from the tank by either gravity flow or pressurization of the tank. [**30A:**4.3.6.6]

42.2.3.8 Physical Protection for All Outside Aboveground Tanks.

42.2.3.8.1 Tanks that are not enclosed in vaults shall be enclosed with a chain link fence at least 6 ft (1.8 m) high. The fence shall be separated from the tanks by at least 10 ft (3 m) and shall have a gate that is secured against unauthorized entry.

*Exception: Tanks are not required to be enclosed with a fence if the property on which the tanks are located has a perimeter security fence. [**30A:**4.3.7.1]*

42.2.3.8.2* Guard posts or other approved means shall be provided to protect tanks that are subject to vehicular damage. When guard posts are installed, the following design shall be acceptable:

(1) They shall be constructed of steel not less than 4 in. (100 mm) in diameter and shall be filled with concrete.
(2) They shall be spaced not more than 4 ft (1.2 m) on center.
(3) They shall be set not less than 3 ft (0.9 m) deep in a concrete footing of not less than 15 in. (380 mm) diameter. [**30A:**4.3.7.2]

42.2.3.9* Corrosion Control. Any portion of a tank or its piping that is in contact with the soil shall have properly engineered, installed, and maintained corrosion protection that meets the requirements of 4.2.6.1 of NFPA 30. [**30A:**4.3.8]

42.2.3.10 Storage of Liquids Inside Buildings. Storage of flammable and combustible liquids in motor fuel dispensing facility buildings and in repair garage buildings shall meet the requirements of this subsection. [**30A:**4.3.9]

42.2.3.10.1 Class I, II, and IIIA Liquids in Tanks Not Exceeding 120 Gal (454 L) Capacity and in Containers.

42.2.3.10.1.1 The aggregate quantity of Class I liquids stored in a tank that does not exceed 120 gal (454 L) capacity and in containers shall not exceed 120 gal (454 L). Liquids in storage shall be maintained in tanks or in approved containers that are closed or are fitted with an approved dispensing device that meets the requirements of 42.2.7.2.4.1. [**30A:**4.3.9.1.1]

42.2.3.10.1.2 The aggregate quantity of Class II and Class IIIA liquids stored in a tank that does not exceed 120 gal (454 L) capacity and in containers shall not exceed 240 gal (908 L). The quantity for each class shall not exceed 120 gal (454 L). Liquids in storage shall be maintained in tanks or in approved containers that are closed or are fitted with an approved dispensing device that meets the requirements of 42.2.7.2.4.1. [**30A:**4.3.9.1.2]

42.2.3.10.2 Class I, II, and IIIA Liquids in Tanks Exceeding 120 Gal (454 L) Capacity. Where installation of a tank that exceeds 120 gal (454 L) capacity in accordance with 4.3.2 of NFPA 30A is not practical because of building or property limitations, the tank shall be permitted to be installed in a building if it is enclosed as described in 42.2.3.4 and if the installation is specifically approved by the AHJ. [**30A:**4.3.9.2]

42.2.3.10.3 Class IIIB Liquids. The quantity of Class IIIB liquids in storage shall not be limited. Class IIIB liquids shall be permitted to be stored in and dispensed from tanks and containers that meet the requirements of 42.2.3.2 and 42.2.5.2 as applicable. Tanks storing Class IIIB liquids inside buildings shall be permitted to be located at, below, or above grade. Adequate drainage shall be provided. Tanks and containers that contain only crankcase drainings shall be considered as containing Class IIIB liquids. [**30A:**4.3.9.3]

42.2.3.11 Temporary Storage of Liquid Fuels. Aboveground tanks used for dispensing of motor fuels shall not be required to be permanently installed when located on premises not normally accessible to the public provided that all of the following requirements are met:

(1) Approval of the AHJ shall be required prior to bringing the tank to a site in the jurisdiction. In reviewing a proposed installation, the condition of the tank, the site where the tank will be located, installation and testing procedures, and operational procedures shall be evaluated prior to approval.
(2) The approval shall include a definite time limit after which the tank shall be removed from the site and relocated to an approved location.
(3) The tank shall comply with 42.2.3.3 and all other applicable provisions of NFPA 30A and NFPA 30.
(4) A tank containing liquid shall not be moved unless it has been specifically investigated and approved for movement while full or partially full. [**30A:**4.3.10]

42.2.4 Piping for Liquids.

42.2.4.1 Scope. Subsection 42.2.4 shall apply to piping systems consisting of pipe, tubing, flanges, bolting, gaskets, valves, fittings, flexible connectors, the pressure-containing parts of other components such as expansion joints and strainers, and devices that serve such purposes as mixing, separating, snubbing, distributing, metering, controlling flow, or secondary containment of liquids and associated vapors. [**30A:**5.1]

42.2.4.2 General Requirements for All Piping Systems.

42.2.4.2.1 The design, fabrication, assembly, test, and inspection of the piping system shall meet the requirements of Chapter 5 of NFPA 30.

Exception No. 1: Where dispensing is from a floating structure or pier, approved oil-resistant flexible hose shall be permitted to be used between shore piping and the piping on the floating structure or pier and between separate sections of the floating structure to accommodate changes in water level or shoreline, provided that the hose is either resistant to or shielded from damage by fire.

*Exception No. 2: Low melting point rigid piping shall be permitted to be used between underground shore piping and a floating structure or pier and on the floating structure or pier itself, provided that the piping is protected from physical damage and stresses arising from impact, settlement, vibration, expansion, contraction, or tidal action and provided that the hose is either resistant to or shielded from damage by fire exposure. [**30A:**5.2.1]*

42.2.4.2.2 Piping shall be located so that it is protected from physical damage. Piping that passes through a dike wall shall be designed to prevent excessive stresses that could result from settlement or fire exposure. [30A:5.2.2]

42.2.4.2.3 Any portion of a piping system that is in contact with the soil shall be protected from corrosion in accordance with good engineering practice. [30A:5.2.3]

42.2.4.2.4 All piping inside buildings but outside the motor fuel dispensing area shall be enclosed within a horizontal chase or a vertical shaft used only for this piping. Vertical shafts and horizontal chases shall be constructed of materials having a fire resistance rating of not less than 2 hours. [30A:5.2.4]

42.2.4.2.5 Each fill pipe shall be identified by color code or other marking to identify the product for which it is used. The color code or marking shall be maintained in legible condition throughout the life of the installation. [30A:5.2.5]

42.2.4.2.6 Shutoff and check valves shall be equipped with a pressure-relieving device that will relieve any pressure generated by thermal expansion of the contained liquid back to the storage tank. [30A:5.2.6]

42.2.4.2.7 Piping components made of low melting point materials shall be permitted to be used without backfill with the following sumps:

(1) Belowgrade underground tank sumps that are fitted with a cover
(2) Belowgrade piping connection sumps that are fitted with a cover
(3) Containment sumps, under the following conditions:
  (a) The sump is monitored to detect any leaks.
  (b) Any leaks can be controlled.
  (c) The components are either resistant to or shielded from damage by fire exposure.
(4) Containment sumps, provided the piping components can successfully pass the test procedures described in API 607, *Fire Test for Soft-Seated Quarter-Turn Valves* [30A:5.2.7]

42.2.5 Fuel Dispensing Systems.

42.2.5.1 Scope. Subsection 42.2.5 shall apply to the system and components that dispense fuel into the tanks of motor vehicles and marine craft. [30A:6.1]

42.2.5.2 General Requirements.

42.2.5.2.1 Dispensing devices installed outside at motor fuel dispensing stations shall be located as follows:

(1) Ten feet or more from property lines
(2) Ten feet or more from buildings, other than canopies, having combustible exterior wall surfaces or buildings having noncombustible exterior wall surfaces that are not a part of a one-hour fire-resistive assembly
(3) Such that all parts of the vehicle being served will be on the premises of the service station
(4) Such that the nozzle, when the hose is fully extended, will not reach within 5 ft (1.5 m) of building openings [30A:6.2.1]

42.2.5.2.2 Liquids shall not be dispensed by applying pressure to drums, barrels, and similar containers. Listed pumps taking suction through the top of the container or listed self-closing faucets shall be used. [30A:6.2.2]

42.2.5.3 Requirements for Dispensing Devices.

42.2.5.3.1 Class I and Class II liquids shall be transferred from tanks by means of fixed pumps designed and equipped to allow control of the flow and prevent leakage or accidental discharge. [30A:6.3.1]

42.2.5.3.2 Dispensing devices for Class I and II liquids shall be listed. [30A:6.3.2]

42.2.5.3.2.1 Existing listed or labeled dispensing devices shall be permitted to be modified provided that the modifications made are "Listed by Report" by an approved testing laboratory or as otherwise approved by the AHJ. Modification proposals shall contain a description of the component parts used in the modification and the recommended methods of installation on specific dispensing devices. Modification proposals shall be made available to the AHJ upon request. [30A:6.3.2.1]

42.2.5.3.3 A control shall be provided that will permit the pump to operate only when a dispensing nozzle is removed from its bracket or normal position with respect to the dispensing device and the switch on this dispensing device is manually actuated. This control shall also stop the pump when all nozzles have been returned to their brackets or to their normal nondispensing position. [30A:6.3.3]

42.2.5.3.4 Dispensing devices shall be mounted on a concrete island or shall otherwise be protected against collision damage by means acceptable to the AHJ. Dispensing devices shall be securely bolted in place. If located indoors, dispensing devices shall also be located in a position where they cannot be struck by a vehicle that is out of control descending a ramp or other slope. Dispensing devices shall be installed in accordance with the manufacturers' instructions. [30A:6.3.4]

42.2.5.3.5 Dispensing devices used to fill portable containers with home heating fuels shall be located at least 20 ft (6 m) from any dispensing devices for motor fuels. [30A:6.3.5]

42.2.5.3.6 When maintenance to dispensing devices is necessary and such maintenance is capable of causing accidental release or ignition of liquid, the following precautions shall be taken before such maintenance is begun:

(1) Only persons knowledgeable in performing the required maintenance shall perform the work.
(2) All electrical power to the dispensing devices, to the pump serving the dispensing devices, and to all associated control circuits shall be shut off at the main electrical disconnect panel.
(3) The emergency shutoff valve at the dispenser, if installed, shall be closed.
(4) All vehicular traffic and unauthorized persons shall be prevented from coming within 20 ft (6 m) of the dispensing device. [30A:6.3.6]

42.2.5.3.7 Motor vehicle traffic patterns at motor fuel dispensing facilities shall be designed to inhibit movement of vehicles that are not being fueled from passing through the dispensing area. [30A:6.3.7]

42.2.5.3.8 At unattended self-serve motor fuel dispensing facilities, coin- and currency-type devices shall only be permitted with the approval of the AHJ. [30A:6.3.8]

42.2.5.3.9 Where liquid is supplied to the dispensing device under pressure, a listed, rigidly anchored emergency shutoff valve, incorporating a fusible link or other thermally actuated

device, designed to close automatically in event of severe impact or fire exposure shall be installed in the supply line at the base of each individual island-type dispenser or at the inlet of each overhead dispensing device. The emergency shutoff valve shall be installed in accordance with the manufacturers' instructions. The emergency shutoff valve shall not incorporate a slip-joint feature.

Exception: As provided for in 42.2.5.3.10. [30A:6.3.9]

42.2.5.3.9.1 The automatic-closing feature of this valve shall be tested at the time of installation and at least once a year thereafter by manually tripping the hold-open linkage. Records of such tests shall be kept at the premises or shall be made available for inspection by the AHJ within 24 hours of a verbal or written request. [**30A:**6.3.9.1]

42.2.5.3.10 Where a suction-type dispensing system includes a booster pump or where a suction-type dispensing system is supplied by a tank in a manner that produces a gravity head on the dispensing device, a listed, vacuum-actuated shutoff valve with a shear section or equivalent-type valve shall be installed directly under the dispensing device. [**30A:**6.3.10]

42.2.5.4 Requirements for Remote/Submersible Pumps. Paragraph 42.2.5.4 shall apply to systems for dispensing Class I and Class II liquids where the liquids are transferred from storage to individual or multiple dispensing devices by pumps located other than at the dispensing devices. [**30A:**6.4]

42.2.5.4.1 Pumps shall be listed and shall be designed or equipped so that no part of the system will be subjected to pressures above its allowable working pressure. [**30A:**6.4.1]

42.2.5.4.2 Each pump shall have installed on the discharge side a listed leak detection device that will provide an audible or visible indication if the piping or a dispenser is leaking. Each leak-detecting device shall be checked and tested at least annually according to the manufacturers' specifications to ensure proper installation and operation.

Exception: A leak detection device shall not be required if all piping is visible. [30A:6.4.2]

42.2.5.4.3 Pumps installed above grade outside of buildings shall be located not less than 10 ft (3 m) from lines of adjoining property that can be built upon and not less than 5 ft (1.5 m) from any building opening. Where an outside pump location is impractical, pumps shall be permitted to be installed inside buildings as provided for dispensers in 42.2.5.3.4 or in sumps as provided in 42.2.5.4.4. Pumps shall be anchored and protected against physical damage. [**30A:**6.4.3]

42.2.5.4.4 Sumps for subsurface pumps or piping manifolds of submersible pumps shall withstand the external forces to which they can be subjected without damage to the pump, tank, or piping. The sump shall be no larger than necessary for inspection and maintenance and shall be provided with a fitted cover. [**30A:**6.4.4]

42.2.5.5 Requirements for Dispensing Hose.

42.2.5.5.1 Listed hose assemblies shall be used to dispense fuel. Hose length at automotive motor fuel dispensing facilities shall not exceed 18 ft (5.5 m). Where hose length at marine motor fuel dispensing facilities exceeds 18 ft (5.5 m), the hose shall be secured so as to protect it from damage. [**30A:**6.5.1]

42.2.5.5.2 A listed emergency breakaway device designed to retain liquid on both sides of the breakaway point shall be installed on each hose dispensing Class I and II liquids. Such devices shall be installed and maintained in accordance with the manufacturers' instructions. [**30A:**6.5.2]

42.2.5.5.3 Where hose are attached to a hose-retrieving mechanism, the listed emergency breakaway device shall be installed between the point of attachment of the hose-retrieving mechanism to the hose and the hose nozzle valve.

Exception: Such devices shall not be required at marine motor fuel dispensing facilities. [30A:6.5.3]

42.2.5.6 Requirements for Fuel Delivery Nozzles.

42.2.5.6.1 A listed, automatic-closing-type hose nozzle valve, with or without latch-open device, shall be provided on island-type dispensing devices used to dispense Class I liquids. [**30A:**6.6.1]

42.2.5.6.2 If a hose nozzle valve is provided with a latch-open device other than the one recommended by the valve manufacturer, the latch-open device shall be an integral part of the valve assembly and such valve/latch-open device combination shall meet all applicable requirements of Section 19A of UL 842, *Standard for Valves for Flammable Fluids.* [**30A:**6.6.2]

42.2.5.6.3* At any installation where the normal flow of product may be stopped other than by the hose nozzle valve, the system shall include listed equipment with a feature that causes or requires the closing of the hose nozzle valve before product flow can be resumed or before the hose nozzle valve can be replaced in its normal position in the dispenser; or the hose nozzle valve shall not be equipped with a latch-open device. [**30A:**6.6.3]

42.2.5.6.4 Overhead-type dispensing devices shall be provided with a listed, automatic-closing-type hose nozzle valve without a latch-open device.

Exception: A listed, automatic-closing-type hose nozzle valve with latch-open device shall be permitted to be used if the hose nozzle valve will close automatically in the event the valve is released from a fill opening or upon impact. [30A:6.6.4]

42.2.5.6.5 Dispensing nozzles used at marine motor fuel dispensing facilities shall be of the automatic-closing type without a latch-open device. [**30A:**6.6.5]

42.2.5.7 Emergency Electrical Disconnects. Fuel dispensing systems shall be provided with one or more clearly identified emergency shutoff devices or electrical disconnects. Such devices or disconnects shall be installed in approved locations but not less than 20 ft (6 m) or more than 100 ft (30 m) from the fuel dispensing devices that they serve. Emergency shutoff devices or electrical disconnects shall disconnect power to all dispensing devices; to all remote pumps serving the dispensing devices; to all associated power, control, and signal circuits; and to all other electrical equipment in the hazardous (classified) locations surrounding the fuel dispensing devices. When more than one emergency shutoff device or electrical disconnect is provided, all devices shall be interconnected. Resetting from an emergency shutoff condition shall require manual intervention and the manner of resetting shall be approved by the AHJ.

Exception: Intrinsically safe electrical equipment need not meet this requirement. [30A:6.7]

42.2.5.7.1 At attended motor fuel dispensing facilities, the devices or disconnects shall be readily accessible to the attendant. [**30A:**6.7.1]

42.2.5.7.2 At unattended motor fuel dispensing facilities, the devices or disconnects shall be readily accessible to patrons and at least one device or disconnect shall be readily accessible to each group of dispensing devices on an individual island. [30A:6.7.2]

42.2.5.8 **Vapor Recovery Systems.**

42.2.5.8.1 Dispensing devices that incorporate vapor recovery shall be listed. [30A:6.8.1]

42.2.5.8.2 Hose nozzle valves used on vapor recovery systems shall be listed for the purpose. [30A:6.8.2]

42.2.5.8.3 Means shall be provided in the vapor return path from each dispensing outlet to prevent the discharge of vapors when the hose nozzle valve is in its normal nondispensing position. [30A:6.8.3]]

42.2.6 **Building Construction Requirements.**

42.2.6.1 **Motor Fuel Dispensing Facilities.**

42.2.6.1.1 **Occupancy Classification.** The occupancy classification of a motor fuel dispensing facility that is located inside a building or structure shall be a low hazard industrial occupancy as defined in NFPA *101*. [30A:7.3.1]

42.2.6.1.2 **Means of Egress.** In a motor fuel dispensing facility that is located inside a building or structure, the required number, location, and construction of means of egress shall meet all applicable requirements for special purpose industrial occupancies, as set forth in NFPA *101*. [30A:7.3.3]

42.2.6.1.3 **Drainage.** Where Class I or Class II liquids are dispensed, provisions shall be made to prevent spilled liquids from flowing into the interior of buildings. Such provisions shall be made by grading driveways, raising door sills, or other equally effective means. [30A:7.3.4]

42.2.6.1.4 **Fixed Fire Protection.**

42.2.6.1.4.1* For an unattended, self-serve, motor fuel dispensing facility, additional fire protection shall be provided where required by the AHJ. [30A:7.3.5.1]

42.2.6.1.4.2 Where required, an automatic fire suppression system shall be installed in accordance with the appropriate NFPA standard, manufacturers' instructions, and the listing requirements of the systems. [30A:7.3.5.2]

42.2.6.1.5 **Fuel Dispensing Areas Inside Buildings.**

42.2.6.1.5.1 The fuel dispensing area shall be separated from all other portions of the building by walls, partitions, floors, and floor–ceiling assemblies having a fire resistance rating of not less than 2 hours. [30A:7.3.6.1]

42.2.6.1.5.2 Interior finish shall be of noncombustible materials or of approved limited-combustible materials, as defined in NFPA 220. [30A:7.3.6.2]

42.2.6.1.5.3 Door and window openings in fire-rated interior walls shall be provided with listed fire doors having a fire protection rating of not less than 1½ hours. Doors shall be self-closing. They shall be permitted to remain open during normal operations if they are designed to close automatically in a fire emergency by means of listed closure devices. Fire doors shall be installed in accordance with NFPA 80. They shall be kept unobstructed at all times. [30A:7.3.6.3]

42.2.6.1.5.4 Openings for ducts in fire-rated interior partitions and walls shall be protected by listed fire dampers. Openings for ducts in fire-rated floor or floor–ceiling assemblies shall be protected with enclosed shafts. Enclosure of shafts shall be with wall or partition assemblies having a fire resistance rating of not less than 2 hours. Openings for ducts into enclosed shafts shall be protected with listed fire dampers. [30A:7.3.6.4]

42.2.6.1.5.5 The fuel dispensing area shall be located at street level, with no dispenser located more than 50 ft (15 m) from the vehicle exit to, or entrance from, the outside of the building. [30A:7.3.6.5]

42.2.6.1.5.6 The fuel dispensing area shall be limited to that required to serve not more than four vehicles at one time.

Exception: At a fleet vehicle motor fuel dispensing facility inside a building, where only Class II and Class III liquids are dispensed, the number of vehicles serviced at any one time shall be permitted to be increased to 12. [30A:7.3.6.6]

42.2.6.1.5.7* A mechanical exhaust system that serves only the fuel dispensing area shall be provided. This system shall meet all of the following requirements:

(1) The system shall be interlocked with the dispensing system so that airflow is established before any dispensing device can operate. Failure of airflow shall automatically shut down the dispensing system.
(2) The exhaust system shall be designed to provide air movement across all portions of the floor of the fuel dispensing area and to prevent the flowing of ignitable vapors beyond the dispensing area.
(3) Exhaust inlet ducts shall not be less than 3 in. (76 mm) or more than 12 in. (305 mm) above the floor. Exhaust ducts shall not be located in floors or penetrate the floor of the dispensing area. Exhaust ducts shall discharge to a safe location outside the building.
(4) The exhaust system shall provide ventilation at a rate of not less than 1 cfm/ft^2 (0.3 m^3/min/m^2) of floor area, based on the fuel dispensing area.
(5) The exhaust system shall meet all applicable requirements of NFPA 91.

Exception: The provisions of 42.2.6.1.5.7 shall not apply to a fuel dispensing area located inside a building if two or more sides of the dispensing area are open to the building exterior. [30A:7.3.6.7]

42.2.6.1.5.8 The floor of the dispensing area shall be liquidtight. Where Class I liquids are dispensed, provisions shall be made to prevent spilled liquids from flowing out of the fuel dispensing area and into other areas of the building by means of curbs, scuppers, special drainage systems, or other means acceptable to the AHJ. [30A:7.3.6.8]

42.2.6.1.5.9* Oil drainage systems shall be equipped with approved oil/water traps or separators, if they connect to public sewers or they discharge into public waterways. [30A:7.3.6.9]

42.2.6.2* **Heating, Ventilating, and Air-Conditioning.**

42.2.6.2.1* Forced air heating, air-conditioning, and ventilating systems serving a fuel dispensing area inside a building or a repair garage shall not be interconnected with any such systems serving other occupancies in the building. Such systems shall be installed in accordance with NFPA 90A. [30A:7.5.1]

42.2.6.2.2 Return air openings in areas of repair garages used for the repair or servicing of vehicles or in a fuel dispensing area shall be not less than 18 in. (455 mm) above floor level measured to the bottom of the openings. [30A:7.5.2]

42.2.6.2.3 Combined ventilation and heating systems shall not recirculate air from areas that are below grade level. [**30A:**7.5.3]

42.2.6.2.4 Exhaust duct openings shall be located so that they effectively remove vapor accumulations at floor level from all parts of the floor area. [**30A:**7.5.4]

42.2.6.3 Heat-Producing Appliances.

42.2.6.3.1 Heat-producing appliances shall be installed in accordance with the requirements of 42.2.6.3. They shall be permitted to be installed in the conventional manner except as provided in 42.2.6.3. [**30A:**7.6.1]

42.2.6.3.2 Heat-producing appliances shall be of an approved type. Solid fuel stoves, improvised furnaces, salamanders, or space heaters shall not be permitted in areas of repair garages used for repairing or servicing of vehicles or in a fuel dispensing area.

Exception No. 1: Unit heaters, when installed in accordance with Chapter 7 of NFPA 30A, need not meet this requirement.

*Exception No. 2: Heat-producing equipment for any lubrication room or service room where there is no dispensing or transferring of Class I or Class II liquids or LP-Gas, when installed in accordance with Chapter 7 of NFPA 30A, need not meet this requirement. [**30A:**7.6.2]*

42.2.6.3.3 Heat-producing appliances shall be permitted to be installed in a special room that is separated from areas that are classified as Division 1 or Division 2, in accordance with Chapter 8 of NFPA 30A, by walls that are constructed to prevent the transmission of vapors, that have a fire resistance rating of at least 1 hour, and that have no openings in the walls that lead to a classified area within 8 ft (2.4 m) of the floor. Specific small openings through the wall, such as for piping and electrical conduit, shall be permitted, provided the gaps and voids are filled with a fire-resistant material to resist transmission of vapors. All air for combustion purposes shall be taken from outside the building. This room shall not be used for storage of combustible materials, except for fuel storage as permitted by the standards referenced in 42.2.6.3.9. [**30A:**7.6.3]

42.2.6.3.4 Heat-producing appliances using gas or oil fuel shall be permitted to be installed in a lubrication or service room where there is no dispensing or transferring of Class I liquids, including the open draining of automotive gasoline tanks, provided the bottom of the combustion chamber is at least 18 in. (455 mm) above the floor and the appliances are protected from physical damage. [**30A:**7.6.4]

42.2.6.3.5 Heat-producing appliances using gas or oil fuel listed for use in garages shall be permitted to be installed in lubrication rooms, service rooms, or fuel dispensing areas where Class I liquids are dispensed or transferred, provided the equipment is installed at least 8 ft (2.4 m) above the floor. [**30A:**7.6.5]

42.2.6.3.6* Where major repairs are conducted on CNG-fueled vehicles or LNG-fueled vehicles, open flame heaters or heating equipment with exposed surfaces having a temperature in excess of 750°F (399°C) shall not be permitted in areas subject to ignitable concentrations of gas. [**30A:**7.6.6]

42.2.6.3.7 Electrical heat-producing appliances shall meet the requirements of Chapter 8 of NFPA 30A. [**30A:**7.6.7]

42.2.6.3.8 Fuels used shall be of the type and quality specified by the manufacturer of the heating appliance. Crankcase drainings shall not be used in oil-fired appliances, unless the appliances are specifically approved for such use. [**30A:**7.6.8]

42.2.6.3.9 Heat-producing appliances shall be installed to meet the requirements of NFPA 90A, NFPA 31, NFPA 54, NFPA 211, and NFPA 82 as applicable, except as hereinafter specifically provided. [**30A:**7.6.9]

42.2.7 Operational Requirements.

42.2.7.1 Scope. Subsection 42.2.7 shall apply to those requirements that relate to the operation of motor fuel dispensing facilities and fuel dispensing systems. [**30A:**9.1]

42.2.7.2 Basic Requirements.

42.2.7.2.1* Inventory Control. Accurate daily inventory records shall be maintained and reconciled for all liquid fuel storage tanks for indication of possible leakage from tanks or piping. The records shall be kept on the premises or shall be made available to the AHJ for inspection within 24 hours of a written or verbal request. The records shall include, as a minimum and by product, daily reconciliation between sales, use, receipts, and inventory on hand. If there is more than one storage system serving an individual pump or dispensing device for any product, the reconciliation shall be maintained separately for each system. [**30A:**9.2.1]

42.2.7.2.2 Tank Filling and Bulk Delivery.

42.2.7.2.2.1 Delivery operations shall meet all applicable requirements of NFPA 385 and the requirements of 42.2.7.2.2.2 through 42.2.7.2.2.4. [**30A:**9.2.2.1]

42.2.7.2.2.2 The delivery vehicle shall be separated from any aboveground tank by at least 25 ft (7.6 m).

Exception No. 1: No minimum separation distance shall be required for tanks that are filled by gravity.

*Exception No. 2: The required minimum separation distance shall be permitted to be reduced to 15 ft (4.6 m) where the fuel being delivered is not a Class I liquid. [**30A:**9.2.2.2]*

42.2.7.2.2.3 The delivery vehicle shall be located so that all parts of the vehicle are on the premises when delivery is made.

*Exception: Existing fuel dispensing facilities and fuel dispensing facilities inside buildings shall not be required to meet this requirement. [**30A:**9.2.2.3]*

42.2.7.2.2.4 Tank filling shall not begin until the delivery operator has determined that the tank has sufficient available capacity (ullage). [**30A:**9.2.2.4]

42.2.7.2.2.5 Tanks shall be filled through a liquidtight connection. Where an aboveground tank is filled by means of fixed piping, either a check valve and shutoff valve with a quick-connect coupling or a check valve with a dry-break coupling shall be installed in the piping at a point where connection and disconnection is made between the tank and the delivery vehicle. This device shall be protected from tampering and physical damage. [**30A:**9.2.2.5]

42.2.7.2.3 Dispensing into Containers.

42.2.7.2.3.1* Class I or Class II liquids shall not be dispensed into portable containers unless the container is constructed of metal or is approved by the AHJ, has a tight closure, and is fitted with a spout or so designed that the contents can be poured without spilling. The hose nozzle valve shall be manually held open during the dispensing operation. [**30A:**9.2.3.1]

42.2.7.2.3.2 No sale or purchase of any Class I, Class II, or Class III liquids shall be made in containers unless such containers are clearly marked with the name of the product contained therein. [30A:9.2.3.2]

42.2.7.2.3.3 Portable containers of 12 gal (45 L) capacity or less shall not be filled while they are in or on a motor vehicle or marine craft. [30A:9.2.3.3]

42.2.7.2.4 Dispensing from a Tank That Does Not Exceed 120 Gal (454 L) and from Containers Inside Buildings. Dispensing of flammable and combustible liquids from a tank not exceeding 120 gal (454 L) capacity and from containers in a motor fuel dispensing facility or in a repair garage building shall meet the requirements of 42.2.7.2.4.1 and 42.2.7.2.4.2. *(See 42.2.3.10 for storage quantity limitations.)* [30A:9.2.4]

42.2.7.2.4.1 Not more than one container of Class I liquid shall be permitted to be provided with a dispensing pump inside a building at any one time. The number of tanks or containers of Class II or Class IIIA liquids fitted for dispensing at any one time shall not be limited, except as provided for in 42.2.3.10.2. The number of tanks or containers of Class IIIB liquids fitted for dispensing at any one time shall not be limited. [30A:9.2.4.1]

42.2.7.2.4.2 Class I, Class II, and Class IIIA liquids shall not be dispensed by applying pressure to tanks or containers. Listed pumps that take suction through the top of the tank or container or listed self-closing faucets shall be used. [30A:9.2.4.2]

42.2.7.2.5 Basic Fire Control.

42.2.7.2.5.1 Sources of Ignition. Smoking materials, including matches and lighters, shall not be used within 20 ft (6 m) of areas used for fueling, servicing fuel systems of internal combustion engines, or receiving or dispensing of Class I and Class II liquids. The motors of all equipment being fueled shall be shut off during the fueling operation except for emergency generators, pumps, and so forth, where continuing operation is essential. [30A:9.2.5.1]

42.2.7.2.5.2 Fire Extinguishers. Each motor fuel dispensing facility or repair garage shall be provided with fire extinguishers installed, inspected, and maintained as required by Section 13.6. Extinguishers for outside motor fuel dispensing areas shall be provided according to the extra (high) hazard requirements for Class B hazards, except that the maximum travel distance to a 80 B:C extinguisher shall be permitted to be 100 feet. [30A:9.2.5.2]

42.2.7.2.5.3 Fire Suppression Systems. Where required, automatic fire suppression systems shall be installed in accordance with the appropriate NFPA standard, manufacturers' instructions, and the listing requirements of the systems. [30A:9.2.5.3]

42.2.7.2.5.4* Signs. Warning signs shall be conspicuously posted in the dispensing area and shall incorporate the following or equivalent wording:

WARNING:

It is unlawful and dangerous to dispense gasoline into unapproved containers.
No smoking.
Stop motor.
No filling of portable containers in or on a motor vehicle.
Place container on ground before filling.
Discharge your static electricity before fueling by touching a metal surface away from the nozzle.
Do not re-enter your vehicle while gasoline is pumping.
If a fire starts, do not remove nozzle — back away immediately.
Do not allow individuals under licensed age to use the pump.
[30A:9.2.5.4]

42.2.7.2.6 Waste Handling.

42.2.7.2.6.1 Crankcase drainings and waste liquids shall not be dumped into sewers, into streams, or on the ground. They shall be stored in approved tanks or containers outside any building, or in tanks installed in accordance with Chapter 4 and Chapter 5 of NFPA 30A, until removed from the premises.

Exception: As provided for in 42.2.3.10.3. [30A:9.2.6.1]

42.2.7.2.6.2 The contents of oil separators and traps of floor drainage systems shall be collected at sufficiently frequent intervals to prevent oil from being carried into sewers. [30A:9.2.6.2]

42.2.7.2.7 Housekeeping. The dispensing area and the area within any dike shall be kept free of vegetation, debris, and any other material that is not necessary to the proper operation of the motor fuel dispensing facility. [30A:9.2.7]

42.2.7.2.8 Fire Doors. Fire doors shall be kept unobstructed at all times. Appropriate signs and markings shall be used. [30A:9.2.8]

42.2.7.3 Operating Requirements for Full-Service Motor Fuel Dispensing Facilities. Each motor fuel dispensing facility shall have an attendant or supervisor on duty whenever the facility is open for business. The attendant or supervisor shall dispense liquids into fuel tanks or into containers, except as covered in 42.2.7.4 and 42.2.7.5. [30A:9.3]

42.2.7.4 Operating Requirements for Attended Self-Service Motor Fuel Dispensing Facilities.

42.2.7.4.1 Self-service motor fuel dispensing facility shall mean that portion of a property where liquids used as motor fuels are stored and dispensed from fixed, approved dispensing equipment into the fuel tanks of motor vehicles by persons other than the facility attendant and shall also include, where provided, facilities for the sale of other retail products. [30A:9.4.1]

42.2.7.4.2 There shall be at least one attendant on duty while the self-service facility is open for business. The attendant's primary function shall be to supervise, observe, and control the dispensing of Class I liquids while said liquids are actually being dispensed. [30A:9.4.2]

42.2.7.4.3 The responsibility of the attendant shall be as follows:

(1) Prevent the dispensing of Class I liquids into portable containers not in compliance with 42.2.7.2.3.1
(2) Prevent the use of hose nozzle valve latch-open devices that do not comply with 42.2.5.6.2
(3) Control sources of ignition
(4) Immediately activate emergency controls and notify the fire department of any fire or other emergency
(5) Handle accidental spills and fire extinguishers if needed [30A:9.4.3]

42.2.7.4.3.1 The attendant or supervisor on duty shall be mentally and physically capable of performing the functions and assuming the responsibility prescribed in 42.2.7.4. [30A:9.4.3.1]

42.2.7.4.4 Operating instructions shall be conspicuously posted in the dispensing area. [30A:9.4.4]

42.2.7.5 Operating Requirements for Unattended Self-Service Motor Fuel Dispensing Facilities.

42.2.7.5.1 Unattended self-service facilities shall be permitted, where approved by the AHJ. [30A:9.5.1]

42.2.7.5.2 Operating instructions shall be conspicuously posted in the dispensing area. The instructions shall include location of

emergency controls and a requirement that the user stay outside of his/her vehicle and in view of the fueling nozzle during dispensing. [**30A:**9.5.2]

42.2.7.5.3 In addition to the warning signs specified in 42.2.7.2.5.4, emergency instructions shall be conspicuously posted in the dispenser area. The instructions shall incorporate the following or equivalent wording:

Emergency Instructions

In case of fire or spill

(1) Use emergency stop button.
(2) Report accident by calling (*specify local fire number*) on the phone. Report location. [**30A:**9.5.3]

42.2.7.5.4 A listed, automatic-closing-type hose nozzle valve with latch-open device shall be provided. The hose nozzle valve shall meet the requirements of 42.2.5.6.3. [**30A:**9.5.4]

42.2.7.5.5 A telephone or other approved, clearly identified means to notify the fire department shall be provided on the site in a location approved by the AHJ. [**30A:**9.5.5]

42.2.7.5.6* Additional fire protection shall be provided where required by the AHJ. [**30A:**9.5.6]

42.2.7.6 Refueling from Tank Vehicles. The dispensing of Class I and Class II liquids in the open from a tank vehicle to a motor vehicle located at commercial, industrial, governmental, or manufacturing establishments and intended for fueling vehicles used in connection with their businesses shall be permitted only if all of the requirements of 42.2.7.6.1 through 42.2.7.6.7 have been met. [**30A:**9.6]

42.2.7.6.1 An inspection of the premises and operations shall be made and operations shall not be conducted unless approved by the AHJ. [**30A:**9.6.1]

42.2.7.6.2 The tank vehicle shall comply with the requirements of NFPA 385. [**30A:**9.6.2]

42.2.7.6.3 The dispensing hose shall not exceed 50 ft (15 m) in length. [**30A:**9.6.3]

42.2.7.6.4 The dispensing nozzle shall be a listed, automatic-closing type without a latch-open device. [**30A:**9.6.4]

42.2.7.6.5 Nighttime deliveries shall only be made in areas deemed adequately lighted by the AHJ. [**30A:**9.6.5]

42.2.7.6.6 The tank vehicle flasher lights shall be in operation while dispensing operations are in progress. [**30A:**9.6.6]

42.2.7.6.7 Expansion space shall be left in each fuel tank to prevent overflow in the event of temperature increase. [**30A:**9.6.7]

42.2.8 Additional Requirements for CNG, LNG, and LPG.

42.2.8.1 Scope. Subsection 42.2.8 shall apply where CNG, LNG, or LP-Gas, or combinations of these, are dispensed as motor vehicle fuels along with Class I or Class II liquids that are also dispensed as motor vehicle fuels. [**30A:**12.1]

42.2.8.2 General Requirements.

42.2.8.2.1 The installation and use of CNG systems shall meet the requirements of NFPA 52 except as modified by 42.2.8. The installation and use of LNG systems shall meet the requirements of NFPA 52 except as modified by 42.2.8. The installation and use of LP-Gas systems shall meet the requirements of NFPA 58 except as modified by 42.2.8. [**30A:**12.2.1]

42.2.8.2.2 A means shall be provided that connects to the dispenser supply piping and that prevents flow in the event that the dispenser is displaced from its mounting. [**30A:**12.2.2]

42.2.8.2.3 Dispensing devices for CNG, LNG, and LP-Gas shall be listed. [**30A:**12.2.3]

42.2.8.2.4 Listed hose assemblies shall be used to dispense fuel. Hose length at automotive motor fuel dispensing facilities shall not exceed 18 ft (5.5 m). [**30A:**12.2.4]

42.2.8.3 Fuel Storage.

42.2.8.3.1 Aboveground tanks storing CNG or LNG shall be separated from any adjacent property line that is or can be built upon, any public way, and the nearest important building on the same property by not less than the distances given in Section 4.4 of NFPA 52. [**30A:**12.3.1]

42.2.8.3.2 Aboveground tanks storing LP-Gas shall be separated from any adjacent property line that is or can be built upon, any public way, and the nearest important building on the same property by not less than the distances given in 3.2.2 of NFPA 58. [**30A:**12.3.2]

42.2.8.3.3* Aboveground tanks storing CNG, LNG, or LP-Gas shall be separated from each other by at least 20 ft (6 m) and from dispensing devices that dispense liquid or gaseous motor vehicle fuels by at least 50 ft (15 m).

Exception No. 1: This required separation shall not apply to tanks storing fuels that have the same chemical composition.

*Exception No. 2: When both the gaseous fuel storage and dispensing equipment are at least 50 ft (15 m) from any other aboveground motor fuel storage or dispensing equipment, the requirements of NFPA 52 or NFPA 58, whichever is applicable, shall apply. [**30A:**12.3.3]*

42.2.8.3.4 Aboveground storage tanks for the storage of CNG, LNG, or LP-Gas shall be provided with physical protection in accordance with 42.2.3.8. [**30A:**12.3.4]

42.2.8.3.5 Horizontal separation shall not be required between aboveground tanks storing CNG, LNG, or LP-Gas and underground tanks containing Class I or Class II liquids, provided the structural limitations of the underground tanks are not exceeded. [**30A:**12.3.5]

42.2.8.4 Dispenser Installations Beneath Canopies. Where CNG or LNG dispensers are installed beneath a canopy or enclosure, either the canopy or enclosure shall be designed to prevent accumulation or entrapment of ignitable vapors or all electrical equipment installed beneath the canopy or enclosure shall be suitable for Class I, Division 2 hazardous (classified) locations. [**30A:**12.4]

42.2.8.5 Specific Requirements for LP-Gas Dispensing Devices.

42.2.8.5.1 Dispensing devices for LP-Gas shall meet all applicable requirements of Chapter 69 and shall incorporate a dispensing nozzle that releases not more than 0.12 in.^{3} (2 cm^3) of liquid LP-Gas upon disconnection. [**30A:**12.5.1]

42.2.8.5.2 Dispensing devices for LP-Gas shall be located not less than 5 ft (1.5 m) from any dispensing device for Class I liquids. [**30A:**12.5.2]

42.2.8.6 Electrical Equipment.

42.2.8.6.1 All electrical wiring and electrical utilization equipment shall be of a type specified by, and shall be installed in accordance with, Section 11.1. [**30A:**12.6.1]

42.2.8.6.2* Table 42.2.8.6.2 shall be used to delineate and classify areas for the purpose of installation of electrical wiring and electrical utilization equipment. [30A:12.6.2]

42.3 Marine Fueling.

42.3.1 Scope.

42.3.1.1 Section 42.3 shall apply to that portion of a property where liquids used as fuels are stored, handled, and dispensed from equipment located on shore or from equipment located on piers, wharves, or floating docks into the fuel tanks of marine craft, including incidental activity, except as covered elsewhere in NFPA 30A or in other NFPA standards. [30A:11.1.1]

42.3.1.2 Section 42.3 shall not apply to the following:

(1) Bulk plant or terminal loading and unloading facilities
(2) Transfer of liquids utilizing a flange-to-flange closed transfer piping system
(3) Marine motor fuel dispensing facilities where liquids used as fuels are stored and dispensed into the fuel tanks of marine craft of 300 gross tons (272 metric tons) or more [30A:11.1.2]

42.3.1.3 For the purpose of Section 42.3, the word *pier* shall also mean dock, floating dock, and wharf. [30A:11.1.3]

42.3.1.4 Permits. Permits, where required, shall comply with Section 1.12.

42.3.2 Storage.

42.3.2.1 Liquids shall be stored in tanks or containers complying with 42.2.3.3. [30A:11.2.1]

42.3.2.2* Tanks that supply marine motor fuel dispensing facilities shall be located on shore or on a pier of the solid-fill type. Pumps that are not integral with the dispensing device shall also be located on shore or on a pier of the solid-fill type.

Exception: Tanks shall be permitted with the approval of the AHJ to be located on a pier, provided the installation meets all applicable requirements of Chapter 4 and Chapter 5 and 7.9.5 of NFPA 30 and the quantity stored does not exceed 1100 gal (4164 L) aggregate capacity. [30A:11.2.2]

42.3.2.3 Where a tank is at an elevation that produces a gravity head on the dispensing device, the tank outlet shall be equipped with a device, such as a normally closed solenoid valve, that will prevent gravity flow from the tank to the dispenser. This device shall be located adjacent to and downstream of the outlet valve specified by 4.3.2.5.1 of NFPA 30. The device shall be installed and adjusted so that liquid cannot flow by gravity from the tank to the dispenser if the piping or hose fails when the dispenser is not in use. [30A:11.2.3]

42.3.3 Piping Systems.

42.3.3.1 Piping shall be installed in accordance with all applicable requirements of Chapter 5 of NFPA 30A. [30A:11.3.1]

42.3.3.2 Piping systems shall be supported and protected against physical damage and stresses arising from impact, settlement, vibration, expansion, contraction, and tidal action. [30A:11.3.2]

42.3.3.3 Means shall be provided to ensure flexibility of the piping system in the event of motion of the pier. Flexible piping shall be of a type designed to withstand the forces and pressures exerted upon the piping. [30A:11.3.3]

42.3.3.4 Where dispensing is from a floating structure or pier, approved oil-resistant flexible hose shall be permitted to be used between shore piping and the piping on a floating structure or pier and between separate sections of the floating structure to accommodate changes in water level or shoreline, provided that the hose is either resistant to or shielded from damage by fire. [30A:11.3.4]

42.3.3.5 A valve to shut off the liquid supply from shore shall be provided in each pipeline at or near the approach to the pier and at the shore end of each marine pipeline adjacent to the point where each flexible hose is attached. [30A:11.3.5]

42.3.4 Fuel Dispensing System.

42.3.4.1 All hose shall be listed. Where hose length exceeds 18 ft (5.5 m), the hose shall be secured so as to protect it from damage. [30A:11.4.1]

Table 42.2.8.6.2 Electrical Equipment Classified Areas for Dispensing Devices

	Extent of Classified Area	
Dispensing Device	Class I, Division 1	Class I, Division 2
Compressed natural gas	Entire space within the dispenser enclosure	5 ft (1.5 m) in all directions from dispenser enclosure
Liquefied natural gas	Entire space within the dispenser enclosure and 5 ft (1.5 m) in all directions from the dispenser enclosure	From 5 ft (1.5 m) to 10 ft (3 m) in all directions from the dispenser enclosure
Liquefied petroleum gas	Entire space within the dispenser enclosure; 18 in. (46 cm) from the exterior surface of the dispenser enclosure to an elevation of 4 ft (1.2 m) above the base of the dispenser; the entire pit or open space beneath the dispenser and within 20 ft (6 m) horizontally from any edge of the dispenser when the pit or trench is not mechanically ventilated	Up to 18 in. (46 cm) above ground and within 20 ft (6 m) horizontally from any edge of the dispenser enclosure, including pits or trenches within this area when provided with adequate mechanical ventilation

[30A:Table 12.6.2]

42.3.4.2 Dispensing nozzles shall be of the automatic-closing type without a latch-open device. [**30A:**11.4.2]

42.3.4.3 Dispensing devices shall be permitted to be located on open piers, on shore, or on piers of the solid-fill type and shall be located apart from other structures so as to provide room for safe ingress to and egress from marine craft. [**30A:**11.4.3]

42.3.4.4 Dispensing devices shall be located so that exposure to all other operational marina or pleasure boat berthing area facilities is minimized. Where tide and weather conditions permit, liquid fuel handling shall be outside the main berthing areas. Where located inside marina or pleasure craft berthing areas, fueling facilities shall be located so that, in case of fire aboard a marine craft alongside, the danger to other craft near the facility is minimized. No vessel or marine craft shall be made fast to or berthed at any fuel dispensing location except during fueling operations. [**30A:**11.4.4]

42.3.4.5 No vessel or marine craft shall be made fast to any other vessel or marine craft occupying a berth at a fuel dispensing location during fueling operations. [**30A:**11.4.5]

42.3.4.6 A marine motor fuel dispensing facility located at a bulk plant shall be separated by a fence or other approved barrier from areas in which bulk plant operations are conducted. Dispensing devices shall not be supplied by aboveground tanks located in the bulk plant. Marine motor fuel dispensing facility storage tanks shall not be connected by piping to aboveground tanks located in the bulk plant. [**30A:**11.4.6]

42.3.4.7 Each marine motor fuel dispensing facility shall have an attendant or supervisor on duty whenever the facility is open for business. The attendant's primary function shall be to supervise, observe, and control the dispensing of liquids. [**30A:**11.4.7]

42.3.5 Sources of Ignition.

42.3.5.1 All electrical components for dispensing liquids shall be installed in accordance with Chapter 8 of NFPA 30A. [**30A:**11.5.1]

42.3.5.2 All electrical equipment shall be installed and used in accordance with the requirements of Section 11.1 as it applies to wet, damp, and hazardous locations. [**30A:**11.5.2]

42.3.5.3 Clearly identified emergency electrical disconnects that are readily accessible in case of fire or physical damage at any dispensing unit shall be provided on each marine wharf. The disconnects shall be interlocked to shut off power to all pump motors from any individual location and shall be manually reset only from a master switch. Each such disconnect shall be identified by an approved sign stating EMERGENCY PUMP SHUTOFF in 2 in. (50 mm) red capital letters. [**30A:**11.5.3]

42.3.5.4 All electrical wiring for power and lighting shall be installed on the side of the wharf opposite from the liquid piping system. [**30A:**11.5.4]

42.3.5.5 Smoking materials, including matches and lighters, shall not be used within 20 ft (6 m) of areas used for fueling, servicing fuel systems for internal combustion engines, or receiving or dispensing of Class I liquids. Conspicuous NO SMOKING signs shall be posted within sight of the customer being served. [**30A:**11.5.5]

42.3.5.6 The motors of all equipment being fueled shall be shut off during the fueling operation, except for emergency generators, pumps, and so forth, where continuing operation is essential. [**30A:**11.5.6]

42.3.6 Electrical Installations.

42.3.6.1 Where excessive stray currents are encountered, piping handling Class I and Class II liquids shall be electrically isolated from the shore piping. [**30A:**8.5.1]

42.3.6.2* Pipelines on piers shall be bonded and grounded. Bonding and grounding connections on all pipelines shall be located on the pier side of hose riser insulating flanges, if used, and shall be accessible for inspection. [**30A:**8.5.2]

42.3.6.3 The fuel delivery nozzle shall be put into contact with the vessel fill pipe before the flow of fuel commences, and this bonding contact shall be continuously maintained until fuel flow has stopped to avoid possibility of electrostatic discharge. [**30A:**8.5.3]

42.3.6.4* Bonding and Grounding.

42.3.6.4.1* Pipelines on piers shall be bonded and grounded. Bonding and grounding connections on all pipelines shall be located on the pier side of hose riser insulating flanges, if used, and shall be accessible for inspection. [**30A:**11.6.1]

42.3.6.4.2 The fuel delivery nozzle shall be put into contact with the vessel fill pipe before the flow of fuel commences and this bonding contact shall be continuously maintained until fuel flow has stopped to avoid possibility of electrostatic discharge. [**30A:**11.6.2]

42.3.7 Fire Control.

42.3.7.1 Each marine motor fuel dispensing facility shall be provided with fire extinguishers installed, inspected, and maintained as required by Section 13.6. Extinguishers for marine motor fuel dispensing areas shall be provided according to the extra (high) hazard requirements for Class B hazards, except that the maximum travel distance to a 80 B:C extinguisher shall be permitted to be 100 ft (31 m). [**30A:**11.7.1]

42.3.7.2 Piers that extend more than 500 ft (152 m) in travel distance from shore shall be provided with a Class III standpipe that is installed in accordance with Section 13.2. [**30A:**11.7.2]

42.3.7.3 Materials shall not be placed on a pier in such a manner that they obstruct access to fire-fighting equipment or important piping system control valves. Where the pier is accessible to vehicular traffic, an unobstructed roadway to the shore end of the wharf shall be maintained for access by fire-fighting apparatus. [**30A:**11.7.3]

42.3.8 Containers and Movable Tanks.

42.3.8.1 The temporary use of movable tanks in conjunction with the dispensing of liquids into the fuel tanks of marine craft on premises not normally accessible to the public shall be permitted. Such installations shall only be made with the approval of the AHJ. [**30A:**11.8.1]

42.3.8.2* Class I or Class II liquids shall not be dispensed into a portable container unless the container is constructed of metal or is approved by the AHJ, has a tight closure, and is fitted with a spout or is so designed that the contents can be dispensed without spilling. [**30A:**11.8.2]

42.3.8.3 Portable containers of 12 gal (45 L) capacity or less shall not be filled while they are in or on a marine craft. [**30A:**11.8.3]

42.3.9 Cargo Tank Fueling Facilities. The provisions of Section 11.2 of NFPA 30A shall not prohibit the dispensing of Class II liquids in the open from a tank vehicle to a marine craft located

at commercial, industrial, governmental, or manufacturing establishments when the liquid is intended for fueling marine craft used in connection with their businesses if the requirements of 42.3.9.1 through 42.3.9.7 are met. [30A:11.9]

42.3.9.1 An inspection of the premises and operations shall be made and approval granted by the AHJ. [30A:11.9.1]

42.3.9.2 The tank vehicle shall comply with the requirements of NFPA 385. [30A:11.9.2]

42.3.9.3 The dispensing hose shall not exceed 50 ft (15 m) in length. [30A:11.9.3]

42.3.9.4 The dispensing nozzle shall be a listed, automatic-closing type without a latch-open device. [30A:11.9.4]

42.3.9.5 Nighttime deliveries shall only be made in areas deemed adequately lighted by the AHJ. [30A:11.9.5]

42.3.9.6 The tank vehicle flasher lights shall be in operation while dispensing. [30A:11.9.6]

42.3.9.7 Fuel expansion space shall be left in each fuel tank to prevent overflow in the event of temperature increase. [30A:11.9.7]

42.3.10 Operating Requirements.

42.3.10.1 The following shall be the responsibilities of the attendant:

(1) Prevent the dispensing of Class I liquids into portable containers that do not comply with 42.3.8.2
(2) Be familiar with the dispensing system and emergency shutoff controls
(3) Ensure that the vessel is properly moored and that all connections are made
(4) Be within 15 ft (4.6 m) of the dispensing controls during the fueling operation and maintain a direct, clear, unobstructed view of both the vessel fuel filler neck and the emergency fuel shutoff control [30A:11.10.1]

42.3.10.2 Fueling shall not be undertaken at night except under well-lighted conditions. [30A:11.10.2]

42.3.10.3 During fueling operations, smoking shall be forbidden on board the vessel or marine craft and in the dispensing area. [30A:11.10.3]

42.3.10.4 Before opening the tanks of the vessel to be fueled, the following precautions shall be taken:

(1) All engines, motors, fans, and bilge blowers shall be shut down.
(2) All open flames and smoking material shall be extinguished and all exposed heating elements shall be turned off.
(3) Galley stoves shall be extinguished.
(4) All ports, windows, doors, and hatches shall be closed. [30A:11.10.4]

42.3.10.5 After the flow of fuel has stopped, the following shall occur:

(1) The fill cap shall be tightly secured.
(2) Any spillage shall be wiped up immediately.
(3) If Class I liquid has been delivered, the entire vessel or marine craft shall remain open.
(4) Bilge blowers shall be turned on and allowed to run for at least 5 minutes before starting any engines or lighting galley fires. If bilge blowers are not available, 10 minutes of ventilation shall be required. [30A:11.10.5]

42.3.10.6 No Class I liquids shall be delivered to any vessel having its tanks located below deck unless each tank is equipped with a separate fill pipe, the receiving end of which shall be securely connected to a deck plate and fitted with a screw cap. Such pipe shall extend into the tank. Vessels receiving Class II or Class IIIA liquids shall have the receiving end of the fill pipe securely connected to a deck plate and fitted with a screw cap. Such pipe shall be permitted to connect to a manifold system that extends into each separate tank. Each tank shall be provided with a suitable vent pipe that shall extend from the tank to the outside of the coaming or enclosed rails so that the vapors will dissipate out board. [30A:11.10.6]

42.3.10.7 Owners or operators shall not offer their vessel or marine craft for fueling unless the following occurs:

(1) The tanks being filled are properly vented to dissipate vapors to the outside atmosphere, and the fuel systems are liquidtight and vaportight with respect to all interiors.
(2) All fuel systems are designed, installed, and maintained in compliance with the specifications of the manufacturer of the vessel or marine craft.
(3) Communication has been established between the fueling attendant and the person in control of the vessel or craft receiving the fuel so as to determine the vessel's fuel capacity, the amount of fuel on board, and the amount of fuel to be taken on board.
(4) The electrical bonding and grounding systems of the vessel or craft have been maintained in accordance with the manufacturers' specifications. [30A:11.10.7]

42.3.10.8 A sign with the following legends printed in 2-in. (50-mm) red capital letters on a white background shall be conspicuously posted at the dispensing area:

Before Fueling:

(1) Stop all engines and auxiliaries.
(2) Shut off all electricity, open flames, and heat sources.
(3) Check all bilges for fuel vapors.
(4) Extinguish all smoking materials.
(5) Close access fittings and openings that could allow fuel vapors to enter enclosed spaces of the vessel.

During Fueling:

(1) Maintain nozzle contact with fill pipe.
(2) Wipe up spills immediately.
(3) Avoid overfilling.
(4) Fuel filling nozzle must be attended at all times.

After Fueling:

(1) Inspect bilges for leakage and fuel odors.
(2) Ventilate until odors are removed. [30A:11.10.8]

42.4 Aircraft Fuel Servicing.

42.4.1 Application. Fuel servicing of all types of aircraft using liquid petroleum fuel shall comply with NFPA 407, *Standard for Aircraft Fuel Servicing*, and Section 42.4.

42.4.1.1 Section 42.4 does not apply to any of the following:

(1) In-flight fueling
(2) Fuel servicing of flying boats or amphibious aircraft on water
(3) Draining or filling of aircraft fuel tanks incidental to aircraft fuel system maintenance operations or manufacturing [407:1.1]

42.4.1.2 Permits. Permits, where required, shall comply with Section 1.12.

42.4.2 Design.

42.4.2.1 General.

42.4.2.1.1 Fueling Hose Apparatus. Nozzle receptacles and hose storage apparatus shall be arranged to avoid kinks and short loops in hose. [**407:**4.1.1]

42.4.2.1.2 Electrostatic Hazards and Bonding.

42.4.2.1.2.1 A provision for bonding shall be incorporated in the design of fuel servicing vehicles or carts and systems to prevent differences in electrostatic potential in accordance with 42.4.5.4. [**407:**4.1.2.1]

42.4.2.1.2.2 Bonding cables shall be constructed of conductive, durable, and flexible material. [**407:**4.1.2.2]

42.4.2.1.2.3 Bonding connections shall be electrically and mechanically firm. Jacks, plugs, clamps, and connecting points shall be clean, unpainted metal to provide a positive electrical connection. [**407:**4.1.2.3]

42.4.2.1.2.4 API BULL 1529, *Aviation Fueling Hose,* Type C hose (semiconductive) shall be used to prevent electrostatic discharges but shall not be used to accomplish required bonding. API BULL 1529, Type A hose that does not have a semiconductive cover shall not be used. Type F hose (hard wall) and Type CT hose (cold temperature) shall be permitted because they have semiconductive covers. [**407:**4.1.2.4]

42.4.2.1.2.5* The design shall incorporate the provision of a 30-second relaxation period between the filter separator and the discharge outlet.

Exception: This requirement shall not apply to systems designed for fuels with static dissipater additives. [407:4.1.2.5]

42.4.2.1.3 No Smoking Signs. Entrances to fueling areas shall be posted with "no smoking" signs. [**407:**4.1.3]

42.4.2.1.4 Radar Equipment — Aircraft.

42.4.2.1.4.1 Surveillance radar equipment in aircraft shall not be operated within 300 ft (90 m) of any fueling, servicing, or other operation in which flammable liquids, vapors, or mist could be present. [**407:**4.1.4.1.1]

42.4.2.1.4.2 Weather-mapping radar equipment in aircraft shall not be operated while the aircraft in which it is mounted is undergoing fuel servicing. [**407:**4.1.4.1.2]

42.4.2.1.5* Radar Equipment — Ground.

42.4.2.1.5.1 Antennas of airport flight traffic surveillance radar equipment shall be located so that the beam will not be directed toward any fuel storage or loading racks within 300 ft (90 m). Aircraft fuel servicing shall not be conducted within this 300 ft (90 m) distance. [**407:**4.1.4.2.1]

42.4.2.1.5.2 Antennas of airport ground traffic surveillance radar equipment shall be located so that the beam will not be directed toward any fuel storage or loading racks within 100 ft (30 m). Aircraft fuel servicing or any other operations involving flammable liquids or vapors shall not be conducted within 100 ft (30 m) of such antennas. [**407:**4.1.4.2.2]

42.4.2.1.6 Emergency Fire Equipment Accessibility. Accessibility to aircraft by emergency fire equipment shall be considered in establishing aircraft fuel servicing positions. [**407:**4.1.5]

42.4.2.1.7 Portable Fire Extinguishers.

42.4.2.1.7.1* Portable extinguishers shall be provided in accordance with 42.4.2.4 and 42.4.5.13. [**407:**4.1.6.1]

42.4.2.1.7.2 Extinguishers shall conform to the requirements of Section 13.6. [**407:**4.1.6.2]

42.4.2.2 Vehicle or Cart Lighting and Electrical Equipment.

42.4.2.2.1 Battery Compartments. Batteries that are not in engine compartments shall be securely mounted in compartments to prevent accidental arcing. The compartment shall be separate from fueling equipment. Suitable shielding shall be provided to drain possible fuel spillage or leakage away from the compartment. The compartment shall be provided with a vent at the top of the compartment. [**407:**4.3.7.1]

42.4.2.2.2 Wiring shall be of adequate size to provide the required current-carrying capacity and mechanical strength. It shall be installed to provide protection from physical damage and from contact with spilled fuel either by its location or by enclosing it in metal conduit or other oil-resistant protective covering. All circuits shall have overcurrent protection. Junction boxes shall be weatherproofed. [**407:**4.3.7.2]

42.4.2.2.3 Spark plugs and other exposed terminal connections shall be insulated to prevent sparking in the event of contact with conductive materials. [**407:**4.3.7.3]

42.4.2.2.4* Motors, alternators, generators, and associated control equipment located outside of the engine compartment or vehicle cab shall be of a type listed for use in accordance with NFPA 70, Class I, Division 1, Group D locations. [**407:**4.3.7.4]

42.4.2.2.5 Electrical equipment and wiring located within a closed compartment shall be of a type listed for use in accordance with NFPA 70, Class I, Division 1, Group D locations. [**407:**4.3.7.5]

42.4.2.2.6 Lamps and switching devices, other than those covered in 42.4.2.2.4 and 42.4.2.2.5, shall be of the enclosed, gasketed, weatherproof type. Other electrical components shall be of a type listed for use in accordance with NFPA 70, Class I, Division 2, Group D locations. [**407:**4.3.7.6]

42.4.2.2.7 Electrical service wiring between a tractor and trailer shall be designed for heavy-duty service. The connector shall be of the positive-engaging type. The trailer receptacle shall be mounted securely. [**407:**4.3.7.7]

42.4.2.3 Cabinets. All cabinets housing vehicle auxiliary equipment shall have expanded metal flooring, perforated metal grating-type flooring, or open floor to facilitate air circulation within the enclosed space and to prevent the accumulation of fuel. [**407:**4.3.8]

42.4.2.4 Fire Extinguishers for Aircraft Fuel Servicing Vehicles or Carts.

42.4.2.4.1 Each aircraft fuel servicing tank vehicle shall have two listed fire extinguishers, each having a rating of at least 20-B:C with one extinguisher mounted on each side of the vehicle. [**407:**4.3.9.1]

42.4.2.4.2 There shall be one listed extinguisher having a rating of at least 20-B:C installed on each hydrant fuel servicing vehicle or cart. [**407:**4.3.9.2]

42.4.2.4.3 Extinguishers shall be readily accessible from the ground. The area of the paneling or tank adjacent to or immediately behind the extinguisher(s) on fueling vehicles or carts shall be painted with a contrasting color. [**407:**4.3.9.3]

42.4.2.4.4 Extinguishers shall be kept clear of elements such as ice and snow. Extinguishers located in enclosed compartments

shall be readily accessible, and their location shall be marked clearly in letters at least 2 in. (50 mm) high. [407:4.3.9.4]

42.4.2.5 Smoking Restrictions.

42.4.2.5.1 A "no smoking" sign shall be posted prominently in the cab of every aircraft fuel servicing vehicle. [407:4.3.11.1]

42.4.2.5.2 Smoking equipment such as cigarette lighters and ash trays shall not be provided. If a vehicle includes such equipment when initially procured, it shall be removed or rendered inoperable. [407:4.3.11.2]

42.4.2.6 Fuel Dispensing System.

42.4.2.6.1 The valve that controls the flow of fuel from an aircraft fuel servicing vehicle or cart to an aircraft shall have a deadman control(s) in accordance with the requirements of 4.1.7 of NFPA 407. [407:4.3.16.1]

42.4.2.6.2 The deadman flow control in the nozzle shall be permitted for overwing fueling. Notches or latches in the nozzle handle that could allow the valve to be locked open shall be prohibited. Each overwing servicing nozzle shall have a cable with a plug or clip for bonding to the aircraft. *(See 42.4.5.4.2.)* [407:4.3.16.2]

42.4.2.6.3 Nozzles for underwing fueling shall be designed to be attached securely to the aircraft adapter before the nozzle can be opened. It shall not be possible to disengage the nozzle from the aircraft adapter until the nozzle is fully closed. [407:4.3.16.3]

42.4.2.6.4 Fuel servicing pump mechanisms shall be designed and arranged so that failure or seizure does not cause rupture of the pump housing, a tank, or of any component containing fuel. Fuel pressure shall be controlled within the stress limits of the hose and plumbing by means of either an in-line pressure controller, a system pressure relief valve, or other suitable means. The working pressure of any system component shall equal or exceed any pressure to which it could be subjected. [407:4.3.16.4]

42.4.2.6.5 On tank full trailer or tank semitrailer vehicles, the use of a pump in the tractor unit with flexible connections to the trailer shall be prohibited unless one of the following conditions exists:

(1) Flexible connections are arranged above the liquid level of the tank in order to prevent gravity or siphon discharge in case of a break in the connection or piping
(2) The cargo tank discharge valves required by 42.4.2.6.1 are arranged to be normally closed and to open only when the brakes are set and the pump is engaged [407:4.3.16.5]

42.4.2.6.6 Hose shall be connected to rigid piping or coupled to the hose reel in a manner that prevents kinks or undue bending action or mechanical stress on the hose or hose couplings. [407:4.3.16.6]

42.4.2.6.7 Aircraft fuel servicing vehicles and carts shall have an integral system or device that prevents the vehicle or cart from being moved unless all fueling nozzles and hydrant couplers are properly stowed and mechanical lifts are lowered to their stowed position. [407:4.3.16.7]

42.4.3 Airport Fuel Systems.

42.4.3.1 **Design Approval.** Work shall not be started on the construction or alteration of an airport fuel system until the design, plans, and specifications have been approved by the AHJ. [407:4.4.1]

42.4.3.2 **System Approval.** The AHJ shall inspect and approve the completed system before it is put into service. [407:4.4.2]

42.4.3.3 Fuel Storage Tanks.

42.4.3.3.1* Fuel storage tanks shall conform to the applicable requirements of NFPA 30, *Flammable and Combustible Liquids Code.* [407:4.4.4.1]

42.4.3.3.2 The AHJ shall determine the clearances required from runways, taxiways, and other aircraft movement and servicing areas to any aboveground fuel storage structure or fuel transfer equipment with due recognition given to national and international standards establishing clearances from obstructions. Tanks located in designated aircraft movement areas or aircraft servicing areas shall be underground or mounded over with earth. Vents from such tanks shall be constructed in a manner to preclude collision hazards with operating aircraft. Aircraft operators shall be consulted regarding the height and location of such vents to avoid venting flammable vapors in the vicinity of ignition sources, including operating aircraft and automotive equipment permitted in the area. [407:4.4.4.2]

42.4.4 **Fueling at Rooftop Heliports.** Fueling on rooftop heliports shall be permitted only where approved by the AHJ. [407:4.5]

42.4.4.1 General Limitations.

42.4.4.1.1 In addition to the special requirements in Section 42.4, the heliport shall comply with the requirements of NFPA 418, *Standard for Heliports.* [407:4.5.1.1]

42.4.4.1.2 Facilities for dispensing fuel with a flash point below 100°F (37.8°C) shall not be permitted at any rooftop heliport. [407:4.5.1.2]

42.4.4.2 Fueling Facilities.

42.4.4.2.1 In addition to the special requirements of Section 42.4, the fuel storage, piping, and dispensing system shall comply with the requirements of NFPA 30 and with applicable portions of NFPA 407 and this *Code.* [407:4.5.2.1]

42.4.4.2.2 The entire system shall be designed so that no part of the system is subjected to pressure above its working pressure. [407:4.5.2.2]

42.4.4.2.3 The fuel storage system shall be located at or below ground level. [407:4.5.2.3]

42.4.4.3 Pumps.

42.4.4.3.1 Pumps shall be located at or below ground level. Relay pumping shall not be permitted. [407:4.5.3.1]

42.4.4.3.2 Pumps installed outside of buildings shall be located not less than 5 ft (1.5 m) from any building opening. They shall be substantially anchored and protected against physical damage from collision. [407:4.5.3.2]

42.4.4.3.3 Pumps installed within a building shall be in a separate room with no opening into other portions of the building. The pump room shall be adequately ventilated. Electrical wiring and equipment shall conform to the requirements of NFPA 70, Article 515. [407:4.5.3.3]

42.4.4.4 Emergency Fuel Shutoff Stations.

42.4.4.4.1 A system shall be provided to completely shut off the flow of fuel in an emergency. The system shall shut off the fuel at the ground level. The emergency fuel shutoff controls shall be in addition to the normal operating controls for the pumps and deadman control. [**407:**4.5.9.1]

42.4.4.4.2 At least two emergency fuel shutoff stations located on opposite sides of the heliport at exitways or at similar locations shall be provided. An additional emergency fuel shutoff station shall be located at ground level and shall be near, but at least 10 ft (3 m) from, the pumps. [**407:**4.5.9.2]

42.4.4.4.3 Each emergency fuel shutoff station location shall be placarded EMERGENCY FUEL SHUTOFF in letters at least 2 in. (50 mm) high. The method of operation shall be indicated by an arrow or by the word PUSH or PULL, as appropriate. Any action necessary to gain access to the shutoff device (e.g., BREAK GLASS) shall be shown clearly. Lettering shall be of a color contrasting sharply with the placard background for visibility. Placards shall be weather resistant, shall be conspicuously located, and shall be positioned so that they can be seen readily from a distance of at least 25 ft (7.6 m). [**407:**4.5.9.3]

42.4.4.5 Fire Protection. Fire protection shall conform to the requirements of NFPA 418, *Standard for Heliports.* [**407:**4.5.10]

42.4.4.6 Personnel Training. All heliport personnel shall be trained in the operation of emergency fuel shutoff controls and in the use of the available fire extinguishers. [**407:**4.5.11]

42.4.5 Operations.

42.4.5.1 General.

42.4.5.1.1 Only authorized personnel trained in the safe operation of the equipment they use, in the operation of emergency controls, and in the procedures to be followed in an emergency shall fuel or defuel aircraft. [**407:**5.1.1]

42.4.5.1.2 Where a valve or electrical device is used for isolation during maintenance or modification of the fuel system, it shall be tagged/locked. The tag/lock shall not be removed until the operation is completed. [**407:**5.1.2]

42.4.5.2* Prevention and Control of Spills.

42.4.5.2.1 Fuel servicing equipment shall comply with the requirements of NFPA 407 and this *Code* and shall be maintained in safe operating condition. Leaking or malfunctioning equipment shall be removed from service. [**407:**5.2.1]

42.4.5.2.2 Following fueling of an aircraft all hose shall be removed including those from hydrant systems. All hose shall also be properly stowed. [**407:**5.2.2]

42.4.5.2.3 Fuel nozzles shall not be dragged along the ground. [**407:**5.2.3]

42.4.5.2.4 Pumps, either hand operated or power operated, shall be used where aircraft are fueled from drums. Pouring or gravity flow shall not be permitted from a container with a capacity of more than 5 gal (18.9 L). [**407:**5.2.4]

42.4.5.2.5 Where a spill is observed, the fuel servicing shall be stopped immediately by release of the deadman controls. In the event that a spill continues, the equipment emergency fuel shutoff shall be actuated. In the event that a spill continues from a hydrant system, the system emergency fuel shutoff shall be actuated. The supervisor shall be notified at once, and the operation shall not be resumed until the spill has been cleared and conditions are determined to be safe. [**407:**5.2.5]

42.4.5.2.6 The airport fire crew shall be notified if a spill covers over 10 ft (3 m) in any direction or is over 50 ft^2 (5 m^2) in area, continues to flow, or is otherwise a hazard to persons or property. The spill shall be investigated to determine the cause, to determine whether emergency procedures were properly carried out, and to determine the necessary corrective measures. [**407:**5.2.6]

42.4.5.2.7 Transferring fuel by pumping from one tank vehicle to another tank vehicle within 200 ft (61 m) of an aircraft shall not be permitted. [**407:**5.2.7]

42.4.5.2.8 Not more than one tank vehicle shall be permitted to be connected to the same aircraft fueling manifold.

Exception: Where means are provided to prevent fuel from flowing back into a tank vehicle because of a difference in pumping pressure. [407:5.2.8]

42.4.5.3 Emergency Fuel Shutoff.

42.4.5.3.1 Access to emergency fuel shutoff control stations shall be kept clear at all times. [**407:**5.3.1]

42.4.5.3.2 A procedure shall be established to notify the fire department serving the airport in the event of a control station activation. [**407:**5.3.2]

42.4.5.3.3 If the fuel flow stops for any reason, it first shall be presumed that an emergency fuel shutoff system has been actuated. The cause of the shutoff shall be corrected before fuel flow is resumed. [**407:**5.3.3]

42.4.5.3.4 Emergency fuel shutoff systems shall be operationally checked at intervals not exceeding 6 months. Each individual device shall be checked at least once during every 12 month period. [**407:**5.3.4]

42.4.5.3.5 Suitable records shall be kept of tests required by 42.4.5.3.4. [**407:**5.3.5]

42.4.5.4* Bonding.

42.4.5.4.1 Prior to making any fueling connection to the aircraft, the fueling equipment shall be bonded to the aircraft by use of a cable, thus providing a conductive path to equalize the potential between the fueling equipment and the aircraft. The bond shall be maintained until fueling connections have been removed, thus allowing separated charges that could be generated during the fueling operation to reunite. Grounding during aircraft fueling shall not be permitted. [**407:**5.4.1]

42.4.5.4.2 In addition to the above, where fueling overwing, the nozzle shall be bonded with a nozzle bond cable having a clip or plug to a metallic component of the aircraft that is metallically connected to the tank filler port. The bond connection shall be made before the filler cap is removed. If there is no plug receptacle or means for attaching a clip, the operator shall touch the filler cap with the nozzle spout before removing the cap in order to equalize the potential between the nozzle and the filler port. The spout shall be kept in contact with the filler neck until the fueling is completed. [**407:**5.4.2]

42.4.5.4.3* Where a funnel is used in aircraft fueling, it shall be kept in contact with the filler neck as well as the fueling nozzle spout or the supply container to avoid the possibility of a spark at the fill opening. Only metal funnels shall be used. [**407:**5.4.3]

42.4.5.4.4 Where a hydrant servicer or cart is used for fueling, the hydrant coupler shall be connected to the hydrant system prior to bonding the fuel equipment to the aircraft. [407:5.4.4]

42.4.5.4.5 Bonding and fueling connections shall be disconnected in the reverse order of connection. [407:5.4.5]

42.4.5.4.6 Conductive hose shall be used to prevent electrostatic discharge but shall not be used to accomplish required bonding. [407:5.4.6]

42.4.5.5 Operation of Aircraft Engines and Heaters.

42.4.5.5.1 Fuel servicing shall not be performed on a fixed wing aircraft while an onboard engine is operating. *(See 42.4.5.21.)*

Exception: In an emergency resulting from the failure of an onboard auxiliary power unit on a jet aircraft and in the absence of suitable ground support equipment, a jet engine mounted at the rear of the aircraft or on the wing on the side opposite the fueling point shall be permitted to be operated during fueling to provide power, provided that the operation follows written procedures approved by the AHJ. [407:5.5.1]

42.4.5.5.2 Combustion heaters on aircraft (e.g., wing and tail surface heaters, integral cabin heaters) shall not be operated during fueling operations. [407:5.5.2]

42.4.5.6 Internal Combustion Engine Equipment Around Aircraft (Other than Aircraft Fuel Servicing Vehicles).

42.4.5.6.1 Equipment, other than that performing aircraft servicing functions, shall not be permitted within 50 ft (15 m) of aircraft during fuel servicing operations. [407:5.6.1]

42.4.5.6.2 Equipment performing aircraft servicing functions shall not be positioned within a 10 ft (3 m) radius of aircraft fuel system vent openings. [407:5.6.2]

42.4.5.6.3 During overwing aircraft fuel servicing where aircraft fuel system vents are located on the upper wing surface, equipment shall not be positioned under the trailing edge of the wing. [407:5.6.3]

42.4.5.7* Electrical Equipment Used on Aircraft Servicing Ramps.

42.4.5.7.1 Battery chargers shall not be connected, operated, or disconnected while fuel servicing is performed on the aircraft. [407:5.7.1]

42.4.5.7.2* Aircraft ground-power generators or other electrical ground-power supplies shall not be connected or disconnected while fuel servicing is performed on the aircraft. [407:5.7.2]

42.4.5.7.3 Electric tools or similar tools likely to produce sparks or arcs shall not be used while fuel servicing is performed on the aircraft. [407:5.7.3]

42.4.5.7.4 Photographic equipment shall not be used within 10 ft (3 m) of the fueling equipment or the fill or vent points of aircraft fuel systems. [407:5.7.4]

42.4.5.7.5 Other than aircraft fuel servicing vehicles, battery-powered vehicles that do not comply with the provisions of NFPA 407 shall not be operated within 10 ft (3 m) of fueling equipment or spills. *(See 42.4.5.6.)* [407:5.7.5]

42.4.5.7.6 Communication equipment used during aircraft fuel servicing operations within 10 ft (3 m) of the fueling equipment or the fill or vent points of aircraft fuel systems shall be intrinsically safe in accordance with UL 913, *Standard for Intrinsically Safe Apparatus and Associated Apparatus for Use in Class I, II, and III Division 1, Hazardous (Classified) Locations.* [407:5.7.6]

42.4.5.8 Open Flames on Aircraft Fuel Servicing Ramps.

42.4.5.8.1 Entrances to fueling areas shall be posted with NO SMOKING signs. [407:5.8.1]

42.4.5.8.2 Open flames on aircraft fuel servicing ramps or aprons within 50 ft (15 m) of any aircraft fuel servicing operation or fueling equipment shall be prohibited. [407:5.8.2]

42.4.5.8.3 The category of open flames and lighted open-flame devices shall include, but shall not be limited to, the following:

(1) Lighted cigarettes, cigars, pipes
(2) Exposed flame heaters, liquid, solid, or gaseous devices, including portable and wheeled gasoline or kerosene heaters
(3) Heat-producing, welding, or cutting devices and blowtorches
(4) Flare pots or other open-flame lights [407:5.8.3]

42.4.5.8.4 The AHJ might establish other locations where open flames and open-flame devices shall not be permitted. [407:5.8.4]

42.4.5.8.5 Personnel shall not carry lighters or matches on their person while engaged in fuel servicing operations. [407:5.8.5]

42.4.5.8.6 Lighters or matches shall not be permitted on or in fueling equipment. [407:5.8.6]

42.4.5.9* Lightning Precautions.

42.4.5.9.1 Fuel servicing operations shall be suspended where there are lightning flashes in the immediate vicinity of the airport. [407:5.9.1]

42.4.5.9.2 A written procedure shall be established to set the criteria for where fueling operations are to be suspended at each airport as approved by the fueling agent and the airport authority. [407:5.9.2]

42.4.5.10 Aircraft Fuel Servicing Locations.

42.4.5.10.1 Aircraft fuel servicing shall be performed outdoors. Aircraft fuel servicing incidental to aircraft fuel system maintenance operations shall comply with the requirements of NFPA 410, *Standard on Aircraft Maintenance.* [407:5.10.1]

42.4.5.10.2* Aircraft being fueled shall be positioned so that aircraft fuel system vents or fuel tank openings are not closer than 25 ft (8 m) to any terminal building, hangar, service building, or enclosed passenger concourse other than a loading walkway. Aircraft being fueled shall not be positioned so that the vent or tank openings are within 50 ft (15 m) of any combustion and ventilation air-intake to any boiler, heater, or incinerator room. [407:5.10.2]

42.4.5.10.3 Accessibility to aircraft by emergency fire equipment shall be established for aircraft fuel servicing positions. [407:5.10.3]

42.4.5.11 Aircraft Occupancy During Fuel Servicing Operations.

42.4.5.11.1 If passengers remain onboard an aircraft during fuel servicing, at least one qualified person trained in emergency evacuation procedures shall be in the aircraft at or near a door at which there is a passenger loading walkway, integral stairs that lead downward, or a passenger loading stair or stand. A clear area for emergency evacuation of the aircraft

shall be maintained at not less than one additional exit. Where fueling operations take place with passengers onboard away from the terminal building, and stairways are not provided, such as during inclement weather (diversions), all slides shall be armed and the ARFF services shall be notified to respond in stand-by position in the vicinity of the fueling activity with at least one vehicle. Aircraft operators shall establish specific procedures covering emergency evacuation under such conditions for each type of aircraft they operate. All "no smoking" signs shall be displayed in the cabin(s), and the no smoking rule shall be enforced. [**407**:5.11.1]

42.4.5.11.2 For each aircraft type, operators shall determine the areas through which it could be hazardous for boarding or deplaning passengers to pass while the aircraft is being fueled. Controls shall be established so that passengers avoid such areas. [**407**:5.11.2]

42.4.5.12 Positioning of Aircraft Fuel Servicing Vehicles and Carts.

42.4.5.12.1 Aircraft fuel servicing vehicles and carts shall be positioned so that a clear path of egress from the aircraft for fuel servicing vehicles shall be maintained. [**407**:5.12.1]

42.4.5.12.2 The propulsion or pumping engine of aircraft fuel servicing vehicles or carts shall not be positioned under the wing of the aircraft during overwing fueling or where aircraft fuel system vents are located on the upper wing surface. Aircraft fuel servicing vehicles or carts shall not be positioned within a 10 ft (3 m) radius of aircraft fuel system vent openings. [**407**:5.12.2]

42.4.5.12.3 Parking brakes shall be set on all fuel servicing vehicles or carts before operators begin the fueling operation. [**407**:5.12.3]

42.4.5.13* Portable Fire Extinguishers.

42.4.5.13.1 During fueling operations, fire extinguishers shall be available on aircraft servicing ramps or aprons. [**407**:5.13.1]

42.4.5.13.2 Each aircraft fuel servicing tank vehicle shall have two listed fire extinguishers, each having a rating of at least 20-B:C, with one extinguisher mounted on each side of the vehicle. [**407**:5.13.2]

42.4.5.13.3 There shall be one listed fire extinguisher having a rating of at least 20-B:C installed on each hydrant fuel servicing vehicle or cart. [**407**:5.13.3]

42.4.5.13.4 Where the open hose discharge capacity of the aircraft fueling system or equipment is more than 200 gpm (750 L/min), at least one listed wheeled extinguisher having a rating of not less than 80-B:C and a minimum capacity of 125 lb (55 kg) of agent shall be provided. [**407**:5.13.4]

42.4.5.13.5* Extinguishers shall be kept clear of elements such as ice and snow. Extinguishers located in enclosed compartments shall be readily accessible, and their location shall be marked clearly in letters at least 2 in. (50 mm) high. [**407**:5.13.5]

42.4.5.13.6* Fuel servicing personnel shall be trained in the use of the available fire extinguishing equipment they could be expected to use. [**407**:5.13.6]

42.4.5.14 Defueling.

42.4.5.14.1 The transfer of fuel from an aircraft to a tank vehicle through a hose generally is similar to fueling, and the same requirements shall apply. In addition, each operator shall establish procedures to prevent the overfilling of the tank vehicle, which is a special hazard when defueling. *(See 4.3.21.7 of NFPA 407.)* [**407**:5.14.1]

42.4.5.14.2 Where draining residual fuel from aircraft tanks incidental to aircraft fuel system maintenance, testing, manufacturing, salvage, or recovery operations, the procedures of NFPA 410, *Standard on Aircraft Maintenance*, shall apply. [**407**:5.14.2]

42.4.5.15 Deadman Control Monitoring.

42.4.5.15.1 The fueling operator shall monitor the panel of the fueling equipment and the aircraft control panel during pressure fueling or shall monitor the fill port during overwing fueling. [**407**:5.15.1]

42.4.5.15.2 Fuel flow shall be controlled by use of a deadman control device. The use of any means that defeats the deadman control shall be prohibited. [**407**:5.15.2]

42.4.5.16* Aircraft Fueling Hose.

42.4.5.16.1 Aircraft fueling hose shall be inspected before use each day. The hose shall be extended as it normally would be for fueling and checked for evidence of blistering, carcass saturation or separation, cuts, nicks, or abrasions that expose reinforcement material, and for slippage, misalignment, or leaks at couplings. If coupling slippage or leaks are found, the cause of the problem shall be determined. Defective hose shall be removed from service. [**407**:5.16.1]

42.4.5.16.2 At least once each month the hose shall be completely extended and inspected as required in 42.4.5.16.1. The hose couplings and the hose shall be examined for a length approximately 12 in. (305 mm) adjacent to the couplings. Structural weakness shall be checked by pressing the hose in this area around its entire circumference for soft spots. Hoses that show evidence of soft spots shall be removed from service. The nozzle screens shall be examined for rubber particles. The presence of such particles indicates possible deterioration of the interior, and the hose shall be removed from service. With the hose still completely extended, it shall be checked at the working pressure of the fueling equipment to which it is attached. Any abnormal twisting or ballooning during this test indicates a weakening of the hose carcass, and the hose shall be removed from service. [**407**:5.16.2]

42.4.5.16.3 A hose assembly that has been subjected to abuse, such as severe end-pull, flattening or crushing by a vehicle, or sharp bending or kinking, shall be removed from service. It shall be hydrostatically tested prior to use. *(See 4.2.2.1 of NFPA 407.)* [**407**:5.16.3]

42.4.5.16.4* If inspection shows that a portion of a hose has been damaged, the damaged portion shall be cut off and the undamaged portion recoupled. Two lengths of hose shall not be coupled together. Only couplings that are an exact match for the interior and exterior dimensions of the hose shall be used. Recoupled hose assemblies shall be hydrostatically tested. *(See 4.2.2.1 of NFPA 407.)* [**407**:5.16.4]

42.4.5.16.5 Before any hose assembly, new or recoupled, is placed in service, it shall be visually inspected for evidence of damage or deterioration. [**407**:5.16.5]

42.4.5.16.6 Kinks or short loops in fueling hose shall be avoided. [**407**:5.16.6]

42.4.5.16.7 Suitable records shall be kept of required inspections and hydrostatic tests. [**407**:5.16.7]

42.4.5.17 Maintenance of Aircraft Fuel Servicing Vehicles and Carts.

42.4.5.17.1 Aircraft fuel servicing vehicles or carts shall not be operated unless they are in proper repair and free of accumulations of grease, oil, or other combustibles. [407:5.17.1]

42.4.5.17.2 Leaking vehicles or carts shall be removed from service, defueled, and parked in a safe area until repaired. [407:5.17.2]

42.4.5.17.3 Maintenance and servicing of aircraft fuel servicing vehicles and carts shall be performed outdoors or in a building approved for the purpose. [407:5.17.3]

42.4.5.18 **Parking Aircraft Fuel Servicing Tank Vehicles.** Parking areas for unattended aircraft fuel servicing tank vehicles shall be arranged to provide the following:

(1) Dispersal of the vehicles in the event of an emergency
(2) A minimum of 10 ft (3 m) of clear space between parked vehicles for accessibility for fire control purposes
(3) Prevention of any leakage from draining to an adjacent building or storm drain that is not suitably designed to handle fuel
(4) A minimum of 50 ft (15 m) from any parked aircraft and buildings other than maintenance facilities and garages for fuel servicing tank vehicles [407:5.18]

42.4.5.19 **Parking Aircraft Fuel Servicing Hydrant Vehicles and Carts.** Parking areas for unattended aircraft fuel servicing hydrant vehicles or carts shall be arranged to provide the following:

(1) Dispersal of the vehicles in the event of an emergency
(2) Prevention of any leakage from draining to an adjacent building or storm drain that is not suitably designed to handle fuel [407:5.19]

42.4.5.20 Loading of Aircraft Fuel Servicing Tank Vehicles.

42.4.5.20.1 General Requirements.

42.4.5.20.1.1 Filling of the vehicle cargo tank shall be under the observation and control of a qualified and authorized operator at all times. [407:5.20.1.1]

42.4.5.20.1.2 The required deadman and automatic overfill controls shall be in normal operating condition during the filling operation. They shall not be blocked open or otherwise bypassed. [407:5.20.1.2]

42.4.5.20.1.3 The engine of the tank vehicle shall be shut off before starting to fill the tank. [407:5.20.1.3]

42.4.5.20.1.4 To prevent leakage or overflow from expansion of the contents due to a rise in atmospheric temperature or direct exposure to the sun, no cargo tank or compartment shall be loaded to the point where it is liquid full. [407:5.20.1.4]

42.4.5.20.2 Top Loading.

42.4.5.20.2.1 Where loading tank trucks through open domes, a bond shall be established between the loading piping and the cargo tank to equalize potentials. The bond connection shall be made before the dome is opened and shall be removed only after the dome is closed. [407:5.20.2.1]

42.4.5.20.2.2 Drop tubes attached to loading assemblies extending into the vehicle tank shall extend to the bottom of the tank and shall be maintained in that position until the tank is loaded to provide submerged loading and avoid splashing or free fall of fuel through the tank atmosphere. The flow rate into the tanks shall not exceed 25 percent of the maximum flow until the outlet is fully covered. [407:5.20.2.2]

42.4.5.20.2.3 The level in the tank shall be visually monitored at all times during top loading. [407:5.20.2.3]

42.4.5.20.3 Bottom Loading.

42.4.5.20.3.1 A bonding connection shall be made between the cargo tank and the loading rack before any fuel connections are made and shall remain in place throughout the loading operation. [407:5.20.3.1]

42.4.5.20.3.2 The operator shall initiate fuel flow by means of a deadman control device. [407:5.20.3.2]

42.4.5.20.3.3 The operator shall perform the precheck on each compartment shortly after flow has started to ensure that the automatic high-level shutoff system is functioning properly. [407:5.20.3.3]

42.4.5.20.3.4 At least monthly the operator shall perform a check to ensure complete closure of the bottom-loading valve on the tank vehicle. [407:5.20.3.4]

42.4.5.21 Rapid Refueling of Helicopters.

42.4.5.21.1 Only turbine engine helicopters fueled with JET A or JET A-1 fuels shall be permitted to be fueled while an onboard engine is operating. Helicopters permitted to be fueled while an onboard engine is operating shall have all sources of ignition of potential fuel spills located above the fuel inlet port(s) and above the vents or tank openings. Ignition sources shall include, but shall not be limited to, engines, exhausts, auxiliary power units (APUs), and combustion-type cabin heater exhausts. [407:5.21.1]

42.4.5.21.2 Helicopter fueling while onboard engines are operating shall be permitted only under the following conditions:

(1) An FAA-licensed helicopter pilot shall be at the aircraft controls during the entire fuel servicing process.
(2)*Passengers shall be deboarded to a safe location prior to rapid refueling operations. Where the pilot in command deems it necessary for passengers to remain onboard for safety reasons, the provisions of 42.4.5.11 shall apply.
(3) Passengers shall not board or deboard during rapid refueling operations.
(4) Only designated personnel, properly trained in rapid refueling operations, shall operate the equipment. Written procedures shall include the safe handling of the fuel and equipment.
(5) All doors, windows, and access points allowing entry to the interior of the helicopter that are adjacent to, or in the immediate vicinity of, the fuel inlet ports shall be closed and shall remain closed during refueling operations.
(6) Fuel shall be dispensed into an open port from approved deadman-type nozzles, with a flow rate not to exceed 60 gpm (227 L/min), or it shall be dispensed through close-coupled pressure fueling ports. Where fuel is dispensed from fixed piping systems, the hose cabinet shall not extend into the rotor space. A curb or other approved barrier shall be provided to restrict the fuel servicing vehicle from coming closer than within 10 ft (3 m) of any helicopter rotating components. If a curb or approved barrier cannot be provided, fuel servicing vehicles shall be kept 20 ft (6 m) away from any helicopter rotating components, and a trained person shall direct fuel servicing vehicle approach and departure. [407:5.21.2]

42.4.5.22 Self-Service Fueling. Occupancy of the aircraft during self-service fueling shall be prohibited. [**407**:5.22]

42.5 Alternate Fuels.

42.5.1 Compressed Natural Gas (CNG) Vehicular Fuel Systems. The design and installation of CNG engine fuel systems on vehicles of all types shall comply with NFPA 52, *Compressed Natural Gas (CNG) Vehicular Fuel Systems Code,* and Section 42.5.

42.5.1.1* Scope.

42.5.1.1.1 This code shall apply to the design, installation, operation, and maintenance of compressed natural gas (CNG) and liquefied natural gas (LNG) engine fuel systems on vehicles of all types and for fueling vehicle (dispensing) systems and associated storage, including the following:

(1) Original equipment manufacturers
(2) Final-stage vehicle integrator/manufacturer (FSVIM)
(3) Vehicle fueling (dispensing) systems [**52**:1.1.1]

42.5.1.1.2* Vehicles and fuel supply containers complying with federal motor vehicle safety standards covering the installation of CNG fuel systems on vehicles and certified by the respective manufacturer as meeting these standards shall not be required to comply with Section 4.4, 4.8.4, and Chapter 5 of NFPA 52 (except Section 5.10, 5.12.4, Section 5.13, and Section 5.14 of NFPA 52.). [**52**:1.1.2]

42.5.1.1.3 NFPA 52 shall apply to the design, installation, operation, and maintenance of compressed hydrogen (GH_2), liquefied compressed hydrogen (LH_2), and blends of hydrogen up to 20 percent with the balance natural gas (NG) vehicle fueling (dispensing) systems and engine fuel systems and facilities. [**52**:1.1.3]

42.5.1.1.4 NFPA 52 shall apply to the design and installation of engine fuel systems up to 3600 psi (25 MPa) for vehicles operating on mixtures of GH_2 up to 20 percent with the balance natural gas (NG). These blends shall be treated as CNG. [**52**:1.1.4]

42.5.1.1.5 NFPA 52 shall apply to the design, installation, operation, and maintenance of LNG engine fuel systems on vehicles of all types, to their associated fueling (dispensing) facilities, and to LNG to CNG facilities with LNG storage in ASME containers of 70,000 gal (265 m^3) or less. [**52**:1.1.5]

42.5.1.1.6 NFPA 52 shall include marine, highway, rail, off-road, and industrial vehicles. [**52**:1.1.6]

42.5.1.1.7 Vehicles that are required to comply with applicable federal motor vehicle safety standards covering the installation of LNG fuel systems on vehicles and that are certified by the manufacturer as meeting these standards shall not be required to comply with Chapter 11 of NFPA 52, except 11.12.8 of NFPA 52. [**52**:1.1.7]

42.5.1.1.8 NFPA 52 shall apply to testing, service, and maintenance of GH_2 engine fuel systems. [**52**:1.1.8]

42.5.1.1.9 Vehicles that meet FMVSS requirements for hydrogen vehicles shall not be subject to NFPA 52. [**52**:1.1.9]

42.5.2 Liquefied Petroleum Gas (LP-Gas).

42.5.2.1 Fuel dispensing facilities for vehicles using LP-Gas shall comply with NFPA 58, *Liquefied Petroleum Gas Code,* and 42.5.2.

42.5.2.2 Scope.

42.5.2.2.1* Chapter 11 of NFPA 58 applies to engine fuel systems using LP-Gas in internal combustion engines, including containers, container appurtenances, carburetion equipment, piping, hose and fittings, and their installation. [**58**:11.1.1]

42.5.2.2.2* Chapter 11 of NFPA 58 shall apply to the installation of fuel systems supplying engines used to propel all motor vehicles. [**58**:11.1.2]

42.5.2.2.3 Chapter 11 of NFPA 58 applies to garaging of vehicles where such systems are installed. [**58**:11.1.3]

42.5.2.2.4 Permits. Permits, where required, shall comply with Section 1.12.

42.5.2.3 Training. Each person engaged in installing, repairing, filling, or otherwise servicing an LP-Gas engine fuel system shall be trained in the necessary procedures. [**58**:11.2]

42.5.2.4 Marking.

42.5.2.4.1 Label Requirements. Each over-the-road general-purpose vehicle powered by LP-Gas shall be identified with a weather-resistant diamond-shaped label located on an exterior vertical or near vertical surface on the lower right rear of the vehicle (on the trunk lid of a vehicle so equipped but not on the bumper of any vehicle) inboard from any other markings. [**58**:11.11.1]

42.5.2.4.2 Label Size.

42.5.2.4.2.1 The label shall be a minimum of 4¾ in. (120 mm) long by 3¼ in. (83 mm) high. [**58**:11.11.2.1]

42.5.2.4.2.2* The marking shall consist of a border and the word PROPANE [1 in. (25 mm) minimum height centered in the diamond] in silver or white reflective luminous material on a black background. [**58**:11.11.2.2]

42.5.2.5 Industrial (and Forklift) Trucks Powered by LP-Gas.

42.5.2.5.1 Scope. Section 11.12 of NFPA 58 applies to LP-Gas installation on industrial trucks (including forklift trucks), both to propel them and to provide the energy for their materials-handling attachments. [**58**:11.12.1]

42.5.2.5.2 Operations. The operation of industrial trucks (including forklift trucks) powered by LP-Gas engine fuel systems shall comply with the following. [**58**:11.12.4]

42.5.2.5.2.1 Industrial trucks shall be refueled outdoors. [**58**:11.12.4.1]

42.5.2.5.2.2 Where cylinders are exchanged indoors, the fuel piping system shall be equipped to minimize the release of fuel when cylinders are exchanged, in accordance with either of the following:

(1) Using an approved quick-closing coupling in the fuel line
(2) Closing the shutoff valve at the fuel cylinder and allowing the engine to run until the fuel in the line is exhausted [**58**:11.12.4.2]

42.5.2.5.2.3 Where LP-Gas–fueled industrial trucks are used in buildings or structures, the following shall apply:

(1) The number of fuel cylinders on such a truck shall not exceed two.

(2) The use of industrial trucks in buildings frequented by the public, including those times when such buildings are occupied by the public, shall require the approval of the AHJ.
(3) The total water capacity of the fuel cylinders on an individual truck shall not exceed 105 lb (48 kg) [nominal 45 lb (20 kg) LP-Gas capacity].
(4) Trucks shall not be parked and left unattended in areas occupied by or frequented by the public without the approval of the AHJ. If left unattended with approval, the cylinder shutoff valve shall be closed.
(5) In no case shall trucks be parked and left unattended in areas of excessive heat or near sources of ignition. [58:11.12.4.3]

42.5.2.5.2.4 All cylinders used in industrial truck service (including forklift truck cylinders) shall have the cylinder pressure relief valve replaced by a new or unused valve within 12 years of the date of manufacture of the cylinder and every 10 years thereafter. [58:11.12.4.4]

42.5.2.6 General Provisions for Vehicles Having Engines Mounted on Them (Including Floor Maintenance Machines).

42.5.2.6.1 Scope.

42.5.2.6.1.1 Paragraph 42.5.2.6 applies to the installation of equipment on vehicles that supply LP-Gas as a fuel for engines installed on these vehicles. [58:11.13.1.1]

42.5.2.6.1.2 Vehicles include floor maintenance and any other portable mobile unit, whether the engine is used to propel the vehicle or is mounted on it for other purposes. [58:11.13.1.2]

42.5.2.6.2 General Requirements.

42.5.2.6.2.1 Industrial trucks (including forklift trucks) and other engines on vehicles operating in buildings other than those used exclusively to house engines shall have an approved automatic shutoff valve installed in the fuel system. [58:11.13.2.1]

42.5.2.6.2.2 The source of air for combustion shall be isolated from the driver and passenger compartment, ventilating system, or air-conditioning system on the vehicle. [58:11.13.2.2]

42.5.2.6.2.3 Non-self-propelled floor maintenance machinery (floor polishers, scrubbers, buffers) and other similar portable equipment shall be listed. [58:11.13.2.3]

42.5.2.6.2.3.1 A label shall be affixed to the machinery or equipment, with the label facing the operator, with the text denoting that the cylinder or portion of the machinery or equipment containing the cylinder shall be stored in accordance with Chapter 8 of NFPA 58. [58:11.13.2.3(A)]

42.5.2.6.2.3.2 The use of floor maintenance machines in buildings frequented by the public, including the times when such buildings are occupied by the public, shall require the approval of the AHJ. [58:11.13.2.3(B)]

42.5.2.7 Garaging of Vehicles. Where vehicles with LP-Gas engine fuel systems mounted on them and general-purpose vehicles propelled by LP-Gas engines are stored or serviced inside garages, the following conditions apply:

(1) The fuel system shall be leak-free.
(2) The container shall not be filled beyond the limits specified in Chapter 7 of NFPA 58.
(3) The container shutoff valve shall be closed when the vehicle or the engine is being repaired, except when the engine is required to operate. Containers equipped with an automatic shutoff valve as specified in 11.4.1.8 of NFPA 58 satisfy this requirement.
(4) The vehicle shall not be parked near sources of heat, open flames, or similar sources of ignition, or near inadequately ventilated pits. [58:11.15)]

42.5.3* Liquefied Natural Gas (LNG). Fuel dispensing facilities for marine, highway, rail, off-road, and industrial vehicles using LNG and LNG storage in ASME containers of 70,000 gal (265 m^3) or less shall comply with NFPA 52.

42.5.3.1 Permits. Permits, where required, shall comply with Section 1.12.

Chapter 43 Spraying, Dipping, and Coating Using Flammable or Combustible Materials

43.1 Application.

43.1.1* Operations involving the spray application of flammable and combustible materials shall comply with NFPA 33, *Standard for Spray Application Using Flammable or Combustible Materials*, and Section 43.1.

43.1.1.1 Section 43.1 shall apply to the spray application of flammable liquids, combustible liquids, or combustible powders either continuously or intermittently, by any of the following methods:

(1) Compressed air atomization
(2) Airless or hydraulic atomization
(3) Electrostatic application methods
(4) Fluidized bed application methods
(5) Electrostatic fluidized bed application methods
(6) Other acceptable application means

43.1.1.2 Section 43.1 shall not apply to the following:

(1)*Spray application processes or operations that are conducted outdoors
(2)*Small portable spraying equipment or aerosol products that are not used repeatedly in the same location
(3) Spray application of noncombustible materials
(4) The hazards of toxicity or industrial health and hygiene

43.1.1.3 Where certain waterborne, spray-applied materials that contain flammable or combustible liquids or that produce combustible residues or deposits are used, the applicable provisions of Section 43.1 shall apply.

43.1.1.4 Permits. Permits, where required, shall comply with Section 1.12.

43.1.2 Location of Spray Application Operations.

43.1.2.1* General. Spray application operations and processes shall be confined to spray booths, spray rooms, or spray areas, as defined in this *Code*. [33:4.1]

43.1.2.2 Locations in Other Occupancies. Spray application operations and processes shall not be conducted in any building that is classified as an assembly, educational, institutional, or residential occupancy, unless they are located in a room that is separated both vertically and horizontally from all surrounding areas by construction having a fire resistance rating of not less than 2 hours. The room shall be protected by an approved automatic sprinkler system designed and installed in accordance with NFPA 13. [33:4.2]

43.1.3 Construction and Design of Spray Areas, Spray Rooms, and Spray Booths.

43.1.3.1* Walls and Ceilings. Walls and ceilings that intersect or enclose a spray area shall be constructed of noncombustible or limited-combustible materials or assemblies and shall be securely and rigidly mounted or fastened. The interior surfaces of the spray area shall be smooth, and designed and installed to prevent pockets that can trap residues, and designed to facilitate ventilation and cleaning. [**33:**5.1]

43.1.3.1.1 Air intake filters that are a part of a wall or ceiling assembly shall be listed as Class 1 or Class 2, in accordance with UL 900, *Test Performance of Air Filter Units.* [**33:**5.1.1]

43.1.3.1.2 The floor of the spray area shall be constructed of noncombustible material, limited-combustible material, or combustible material that is completely covered by noncombustible material. [**33:**5.1.2]

43.1.3.1.3 Aluminum shall not be used for structural support members or the walls or ceiling of a spray booth or spray room enclosure. Aluminum shall also not be used for ventilation ductwork associated with a spray booth or spray room. Aluminum shall be permitted to be used for interior components, such as platforms, spray apparatus components, and other ancillary devices. [**33:**5.1.3]

43.1.3.1.4 If walls or ceiling assemblies are constructed of sheet metal, single-skin assemblies shall be no thinner than 0.0478 in. (1.2 mm) and each sheet of double-skin assemblies shall be no thinner than 0.0359 in. (0.9 mm). [**33:**5.1.4]

43.1.3.1.5 Structural sections of spray booths shall be permitted to be sealed with a caulk or sealant to minimize air leakage. [**33:**5.1.5]

43.1.3.1.6 Spray rooms shall be constructed of and separated from surrounding areas of the building by construction assemblies that have a fire resistance rating of 1 hour. [**33:**5.1.6]

43.1.3.1.7 Enclosed spray booths and spray rooms shall be provided with means of egress that meet the requirements of NFPA *101.* [**33:**5.1.7]

43.1.3.1.8 Spray booths that are used exclusively for powder coating shall meet the requirements of Section 43.6. They shall be permitted to be constructed of fire-retardant combustible materials where approved by the AHJ.

Exception: Listed spray booth assemblies that are constructed of other materials shall be permitted. [33:5.1.8]

43.1.3.2 Conveyor Openings. Conveyor openings that are necessary for transporting or moving work into and out of the spray area shall be as small as practical. [**33:**5.2]

43.1.3.3* Separation from Other Occupancies. Spray booths shall be separated from other operations by a minimum distance of 3 ft (915 mm) or by a partition, wall, or floor/ceiling assembly having a minimum fire resistance rating of 1 hour. Multiple connected spray booths shall not be considered as "other operations."

Exception: As provided for in Section 13.3 of NFPA 33. [33:5.3]

43.1.3.3.1 Spray booths shall be installed so that all parts of the booth are readily accessible for cleaning. [**33:**5.3.1]

43.1.3.3.2 A clear space of not less than 3 ft (915 mm) shall be maintained on all sides and above the spray booth. This clear space shall be kept free of any storage or combustible construction.

Exception No. 1: This requirement shall not prohibit locating a spray booth closer than 3 ft (915 mm) to or directly against an interior partition, wall, or floor/ceiling assembly that has a fire resistance rating of not less than 1 hour, provided the spray booth can be maintained and cleaned.

Exception No. 2: This requirement shall not prohibit locating a spray booth closer than 3 ft (915 mm) to an exterior wall or a roof assembly provided the wall or roof is constructed of noncombustible material and provided the spray booth can be maintained and cleaned. [33:5.3.2]

43.1.3.4 Movement of Powered Vehicles. Powered vehicles shall not be moved into or out of a spray area or operated in a spray area unless the spray application operation or process is stopped and the ventilation system is maintained in operation.

Exception: This requirement shall not apply to vehicles that are listed for the specific hazards of the spray area. [33:5.4]

43.1.3.5 Vision Panels. Panels for light fixtures or for observation shall be of heat-treated glass, wired glass, or hammered-wired glass and shall be sealed to confine vapors, mists, residues, dusts, and deposits to the spray area. Panels for light fixtures shall be separated from the fixture to prevent the surface temperature of the panel from exceeding 200°F (93°C). [**33:**5.5]

43.1.3.6 Ventilation. Spray areas that are equipped with ventilation distribution or baffle plates or with dry overspray collection filters shall meet the requirements of 43.1.3.6.1 through 43.1.3.6.5. [**33:**5.6]

43.1.3.6.1 Distribution plates or baffles shall be constructed of noncombustible materials and shall be readily removable or accessible for cleaning on both sides. [**33:**5.6.1]

43.1.3.6.2 Filters shall not be used when applying materials known to be highly susceptible to spontaneous heating or spontaneous ignition. [**33:**5.6.2]

43.1.3.6.3 Supports and holders for filters shall be constructed of noncombustible materials. [**33:**5.6.3]

43.1.3.6.4 Overspray collection filters shall be readily removable or accessible for cleaning or replacement. [**33:**5.6.4]

43.1.3.6.5 Filters shall not be alternately used for different types of coating materials if the combination of the materials might result in spontaneous heating or ignition. *(See also Section 10.8 of NFPA 33.)* [**33:**5.6.5]

43.1.4 Electrical and Other Sources of Ignition.

43.1.4.1* General.

43.1.4.1.1 Electrical wiring and utilization equipment shall meet all applicable requirements of Articles 500, 501, 502, 505, and 516 of NFPA 70 and all applicable requirements of this chapter.

Exception No. 1: Powered vehicles shall meet the requirements of Section 5.4 of NFPA 33.

Exception No. 2: Resin application operations shall meet the requirements of Chapter 17 of NFPA 33. [33:6.2.1]

43.1.4.1.2* For the purposes of this *Code,* the Zone system of electrical area classification shall be applied as follows:

(1) The inside of open or closed containers or vessels shall be considered a Class I, Zone 0 location.
(2) A Class I, Division 1 location shall be permitted to be alternatively classified as a Class I, Zone 1 location.
(3) A Class I, Division 2 location shall be permitted to be alternatively classified as a Class I, Zone 2 location. [**33:**6.2.2]

43.1.4.1.3 For the purposes of electrical area classification, the Division system and the Zone system shall not be intermixed for any given source of release. [33:6.2.3]

43.1.4.1.4 Where areas in the same facility are classified separately, a Class I, Zone 2 location shall be permitted to abut, but shall not overlap, a Class I, Division 2 location. A Class I, Zone 0 or Class I, Zone 1 location shall not abut a Class I, Division 1 or a Class I, Division 2 location. [33:6.2.4]

43.1.4.1.5* Open flames, spark-producing equipment or processes, and equipment whose exposed surfaces exceed the autoignition temperature of the material being sprayed shall not be located in a spray area or in any surrounding area that is classified as Division 2 or Zone 2.

Exception: This requirement shall not apply to drying, curing, or fusing apparatus covered by Section 43.4. [33:6.2.5]

43.1.4.1.6* Any utilization equipment or apparatus that is capable of producing sparks or particles of hot metal and is located above or adjacent to either the spray area or the surrounding Division 2 or Zone 2 areas shall be of the totally enclosed type or shall be constructed to prevent the escape of sparks or particles of hot metal. [33:6.2.6]

43.1.4.2 Electrical Area Classification.

43.1.4.2.1* Class I Locations. A Class I location shall be any location where a flammable gas or vapor is present or might be present in the air in quantities sufficient to produce an explosive or ignitable mixture. [33:6.3.1]

43.1.4.2.1.1* Class I, Division 1 Locations. A Class I, Division 1 location shall be any location where one of the following conditions exists:

(1) Where an ignitable concentration of flammable gas or vapor can exist under normal operating conditions.
(2) Where an ignitable concentration of flammable gas or vapor can exist frequently because of repair or maintenance operations or because of leakage.
(3) Where breakdown or faulty operation of equipment or processes might release an ignitable concentration of flammable gas or vapor and might also cause simultaneous failure of electrical equipment in such a way as to directly cause the electrical equipment to become a source of ignition. [33:6.3.1.1]

43.1.4.2.1.2* Class I, Division 2 Locations. A Class I, Division 2 location shall be any location where one of the following conditions exists:

(1) Where a flammable gas or a volatile flammable liquid is handled, processed, or used, but any flammable gas, vapor, or liquid is confined within a closed container or a closed system from which it can escape only in case of accidental rupture or breakdown of the container or system or in case of abnormal operation of the equipment.
(2) Where an ignitable concentration of flammable gas or vapor is normally prevented by positive mechanical ventilation, but which might exist because of failure or abnormal operation of the ventilating equipment.
(3) Where an ignitable concentration of flammable gas or vapor might occasionally be transmitted from an adjacent Class I, Division 1 location, unless such transmission is prevented by positive pressure ventilation from a source of clean air and effective safeguards against ventilation failure are provided. [33:6.3.1.2]

43.1.4.2.1.3* Class I, Zone 0 Locations. A Class I, Zone 0 location shall be any location where an ignitable concentration of flammable gas or vapor is present either continuously or for long periods of time. [33:6.3.1.3]

43.1.4.2.1.4* Class I, Zone 1 Locations. A Class I, Zone 1 location shall be any location where one of the following conditions exists:

(1) Where an ignitable concentration of flammable gas or vapor is likely to exist under normal operating conditions.
(2) Where an ignitable concentration of flammable gas or vapor can exist frequently because of repair or maintenance operations or because of leakage.
(3) Where breakdown or faulty operation of equipment or processes might release an ignitable concentration of flammable gas or vapor and might also cause simultaneous failure of electrical equipment in such a way as to directly cause the electrical equipment to become a source of ignition.
(4) Where an ignitable concentration of flammable gas or vapor might occasionally be transmitted from an adjacent Class I, Zone 0 location, unless such transmission is prevented by positive pressure ventilation from a source of clean air and effective safeguards against ventilation failure are provided. [33:6.3.1.4]

43.1.4.2.1.5* Class I, Zone 2 Locations. A Class I, Zone 2 location shall be any location where one of the following conditions exists:

(1) Where an ignitable concentration of a flammable gas or vapor is not likely to exist under normal operating conditions and, if an ignitable concentration does exist, will exist only for a short period of time.
(2) Where a flammable gas or a volatile flammable liquid is handled, processed, or used, but any flammable gas, vapor, or liquid is confined within a closed container or a closed system from which it can escape only in case of accidental rupture or breakdown of the container or system or in case of abnormal operation of the equipment.
(3) Where an ignitable concentration of flammable gas or vapor is normally prevented by positive mechanical ventilation, but which might exist because of failure or abnormal operation of the ventilating equipment.
(4) Where an ignitable concentration of flammable gas or vapor might occasionally be transmitted from an adjacent Class I, Zone 1 location, unless such transmission is prevented by positive pressure ventilation from a source of clean air and effective safeguards against ventilation failure are provided. [33:6.3.1.5]

43.1.4.2.2 Class II Locations. A Class II location shall be any location that might be hazardous because of the presence of a combustible dust. [33:6.3.2]

43.1.4.2.2.1* Class II, Division 1 Locations. A Class II, Division 1 location shall be any location where one of the following conditions exists:

(1) Where combustible dust is in the air in quantities sufficient to produce explosive or ignitable mixtures under normal operating conditions.
(2) Where mechanical failure or abnormal operation of machinery or equipment might cause an explosive or ignitable mixture of combustible dust in air and might also provide a source of ignition through simultaneous failure of electrical equipment, operation of protection devices, or from other causes.
(3) Where combustible dust of an electrically conductive nature might be present in hazardous quantities. [33:6.3.2.1]

43.1.4.2.2.2* Class II, Division 2 Locations. A Class II, Division 2 location shall be any location where one of the following conditions exists:

(1) Where combustible dust is not normally in the air in quantities sufficient to produce explosive or ignitable mixtures and accumulations of dust are normally insufficient to interfere with the normal operation of electrical equipment or other apparatus, but combustible dust might be in suspension in air as a result of infrequent malfunctioning of handling or processing equipment.
(2) Where accumulations of combustible dust on, in, or in the vicinity of the electrical equipment might be sufficient to interfere with the safe dissipation of heat from electrical equipment or might be ignited by abnormal operation or failure of the electrical equipment. [**33:**6.3.2.2]

43.1.4.3 Electrical Devices in Spray Areas.

43.1.4.3.1 Electrical wiring and utilization equipment that is located in the spray area and is not subject to deposits of combustible residues shall be suitable for Class I, Division 1; Class I, Zone 1; or Class II, Division 1 locations, whichever is applicable. [**33:**6.4.1]

43.1.4.3.2* Electrical wiring and utilization equipment that is located in the spray area and is subject to deposits of combustible residues shall be listed for such exposure and shall be suitable for Class I, Division 1; Class I, Zone 1; or Class II, Division 1 locations, whichever is applicable. [**33:**6.4.2]

43.1.4.4 Electrical Devices Adjacent to Spray Areas. Electrical wiring and utilization equipment located adjacent to the spray area shall be classified in accordance with 43.1.4.4.1 through 43.1.4.4.5. [**33:**6.5]

43.1.4.4.1 Electrical wiring and utilization equipment located outside, but within 20 ft (6100 mm) horizontally and 10 ft (3050 mm) vertically, of an unenclosed spray area and not separated from the spray area by partitions extending to the boundaries of the area designated as Division 2 or Zone 2 in Figure 43.1.4.4.1 shall be suitable for Class I, Division 2; Class I, Zone 2; or Class II, Division 2 locations, whichever is applicable. [**33:**6.5.1]

43.1.4.4.2 If spray application operations are conducted within a closed-top, open-face or open-front booth or room, any electrical wiring or utilization equipment located outside of the booth or room but within the boundaries designated as Division 2 or Zone 2 in Figure 43.1.4.4.2(a) and Figure 43.1.4.4.2(b) shall be suitable for Class I, Division 2; Class I, Zone 2; or Class II, Division 2 locations, whichever is applicable. [**33:**6.5.2]

43.1.4.4.2.1 The Class I, Division 2; Class I, Zone 2; or Class II, Division 2 locations shown in Figure 43.1.4.4.2(a) and Figure 43.1.4.4.2(b) shall extend from the edges of the open face or open front of the booth or room in accordance with the following:

(1) If the exhaust ventilation system is interlocked with the spray application equipment, then the Division 2 or Zone 2 location shall extend 5 ft (1525 mm) horizontally and 3 ft (915 mm) vertically from the open face or open front of the booth or room, as shown in Figure 43.1.4.4.2(a).
(2) If the exhaust ventilation system is not interlocked with the spray application equipment, then the Division 2 or Zone 2 location shall extend 10 ft (3050 mm) horizontally and 3 ft (915 mm) vertically from the open face or open front of the booth or room, as shown in Figure 43.1.4.4.2(b). [**33:**6.5.2.1]

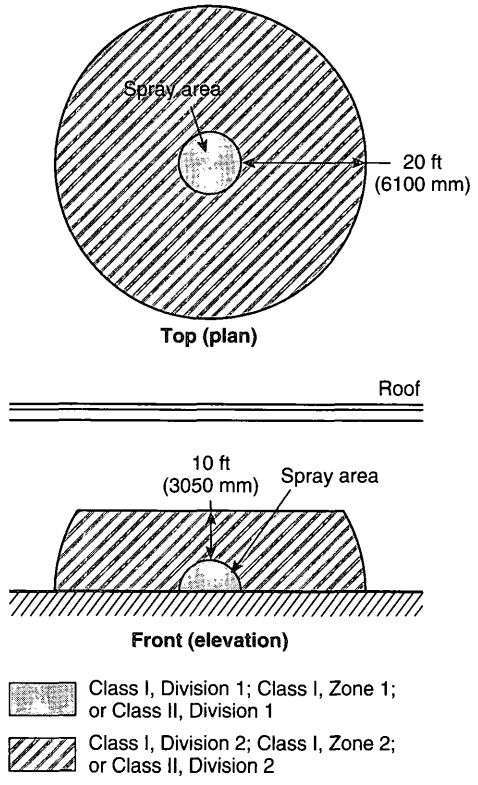

FIGURE 43.1.4.4.1 Electrical Area Classification for Open Spray Areas. [33:Figure 6.5.1]

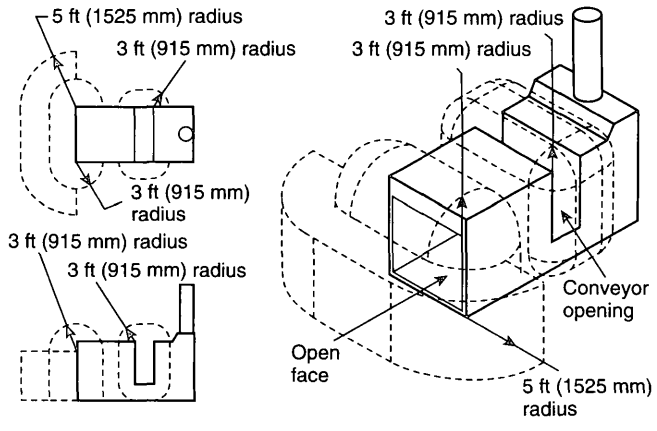

FIGURE 43.1.4.4.2(a) Class I, Division 2; Class I, Zone 2; or Class II, Division 2 Locations Adjacent to an Open-Faced or Open-Front Spray Booth or Spray Room with Exhaust Ventilation Interlocked with Spray Application Equipment. [33:Figure 6.5.2(a)]

43.1.4.4.2.2 For the purposes of 43.1.4.4.2, *interlocked* shall mean that the spray application equipment cannot be operated unless the exhaust ventilation system is operating and functioning as designed and spray application is automatically stopped if the exhaust ventilation system fails. [**33:**6.5.2.2]

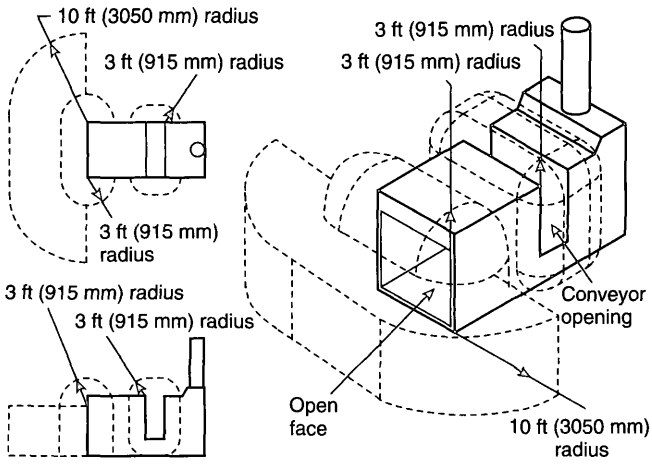

FIGURE 43.1.4.4.2(b) Class I, Division 2; Class I, Zone 2; or Class II, Division 2 Locations Adjacent to an Open-Faced or Open-Front Spray Booth or Spray Room with Exhaust Ventilation Not Interlocked with Spray Application Equipment. [33:Figure 6.5.2(b)]

43.1.4.4.3 If spray application operations are conducted within an open-top booth, any electrical wiring or utilization equipment located within the space 3 ft (915 mm) vertically from the top of the booth shall be suitable for Class I, Division 2; Class I, Zone 2; or Class II, Division 2 locations, whichever is applicable. In addition, any electrical wiring or utilization equipment located within 3 ft (915 mm) in all directions of openings other than the open top also shall be suitable for Class I, Division 2; Class I, Zone 2; or Class II, Division 2 locations, whichever is applicable. [33:6.5.3]

43.1.4.4.4 If spray application operations are confined to an enclosed spray booth or room, any electrical wiring or utilization equipment located within 3 ft (915 mm) of any opening shall be suitable for Class I, Division 2; Class I, Zone 2; or Class II, Division 2 locations, whichever is applicable, as shown in Figure 43.1.4.4.4. [33:6.5.4]

43.1.4.4.5 Open containers, supply containers, waste containers, spray gun cleaners, and solvent distillation units that contain Class I liquids shall be located in areas ventilated in accordance with applicable requirements of 43.1.5. [33:6.5.5]

43.1.4.4.5.1 Electrical area classification shall be as follows:

(1) The area within 3 ft (915 mm) in all directions from any such container or equipment and extending to the floor or grade level shall be classified as Class I, Division 1 or Class I, Zone 1, whichever is applicable.
(2) The area extending 2 ft (610 mm) beyond the Division 1 or Zone 1 location shall be classified as Class I, Division 2 or Class I, Zone 2, whichever is applicable.
(3) The area extending 5 ft (1525 mm) horizontally beyond the area described in (2) up to a height of 18 in. (460 mm) above the floor or grade level shall be classified as Class I, Division 2, or Class I, Zone 2, whichever is applicable.
(4) The area inside any tank or container shall be classified as Class I, Division 1, or Class I, Zone 0, whichever is applicable. [33:6.5.5.1]

43.1.4.4.5.2 Electrical wiring and utilization equipment installed in these areas shall be suitable for the location, as shown in Figure 43.1.4.4.5.2. [33:6.5.5.2]

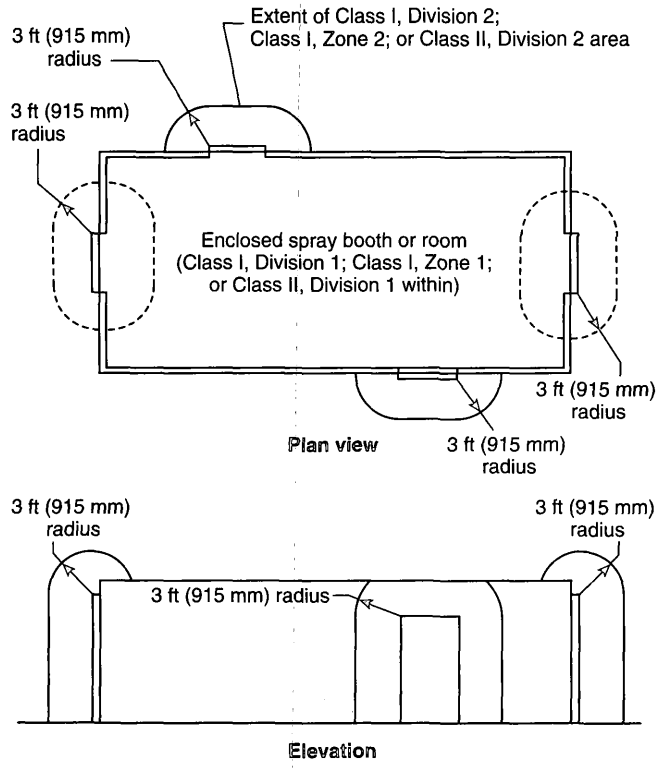

FIGURE 43.1.4.4.4 Class I, Division 2; Class I, Zone 2; or Class II, Division 2 Locations Adjacent to an Enclosed Spray Booth or Spray Room. [33:Figure 6.5.4]

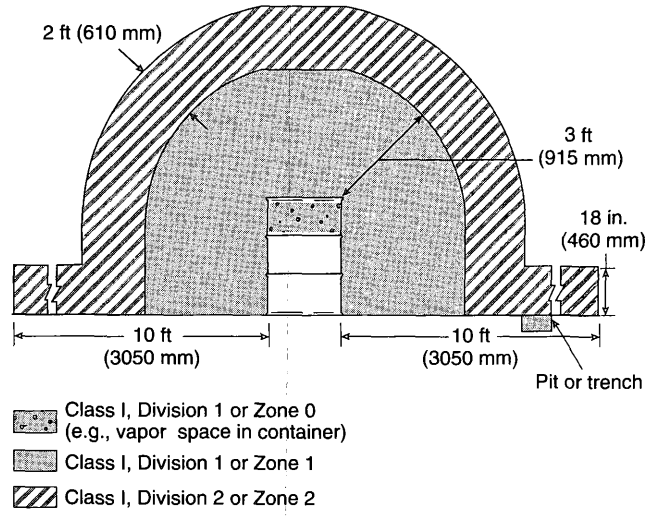

FIGURE 43.1.4.4.5.2 Electrical Area Classification for Class I Liquid Operations Around Open Containers, Supply Containers, Waste Containers, Spray Gun Cleaners, and Solvent Distillation Units. [33:Figure 6.5.5.2]

43.1.4.5 Light Fixtures.

43.1.4.5.1 Light fixtures as shown in Figure 43.1.4.5.1 that are attached to the walls or ceilings of a spray area, but are outside of any classified area and are separated from the spray area by glass

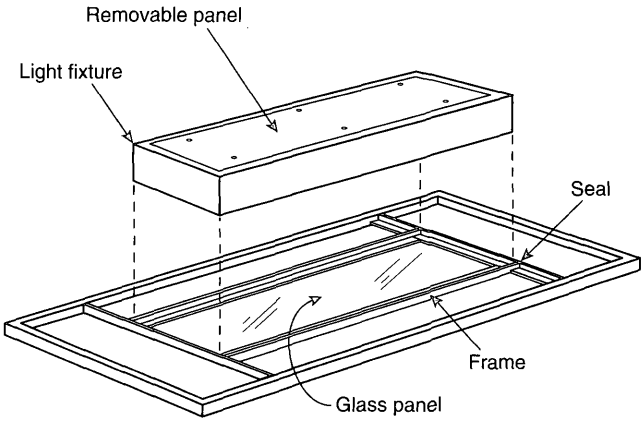

FIGURE 43.1.4.5.1 Example of a Light Fixture Mounted Outside of the Spray Area and Serviced from Outside the Spray Area. [33:Figure 6.6.1]

panels that meet the requirements of Section 5.5 of NFPA 33, shall be suitable for use in unclassified locations. Such fixtures shall be serviced from outside the spray area. [**33**:6.6.1]

43.1.4.5.2 Light fixtures as shown in Figure 43.1.4.5.1 that are attached to the walls or ceilings of a spray area; are separated from the spray area by glass panels that meet the requirements of Section 5.5 of NFPA 33; and are located within a Class I, Division 2, Class I, Zone 2, or Class II, Division 2 location shall be suitable for such location. Such fixtures shall be serviced from outside the spray area. [**33**:6.6.2]

43.1.4.5.3 Light fixtures as shown in Figure 43.1.4.5.3 that are an integral part of the walls or ceiling of a spray area shall be permitted to be separated from the spray area by glass panels that are an integral part of the fixture. Such fixtures shall be listed for use in Class I, Division 2; Class I, Zone 2; or Class II, Division 2 locations, whichever is applicable, and also shall be listed for accumulations of deposits of combustible residues. Such fixtures shall be permitted to be serviced from inside the spray area. [**33**:6.6.3]

43.1.4.5.4 Light fixtures that are located inside the spray area shall meet the requirements of Section 6.4 and Section 6.7 of NFPA 33. [**33**:6.6.4]

43.1.4.6* Static Electricity. All persons, all electrically conductive parts of the spray room or spray booth, the exhaust ducts, spray equipment, objects or containers that receive the spray stream, and piping systems that convey flammable or combustible liquids or aerated combustible solids shall be electrically bonded and grounded to prevent sparks from the accumulation of static electricity. [**33**:6.7]

43.1.4.7 Flexible Power Cords. For automated equipment and robotic equipment, flexible power cords shall be permitted to be used in hazardous (classified) locations and shall be permitted to be connected to the fixed part of the electrical circuit, provided they meet all of the following conditions:

(1) They are approved for extra-hard usage.
(2) They are equipped with a grounding conductor that meets the requirements of Section 400.2 of NFPA 70.
(3) They are connected to terminals or conductors in an approved manner.

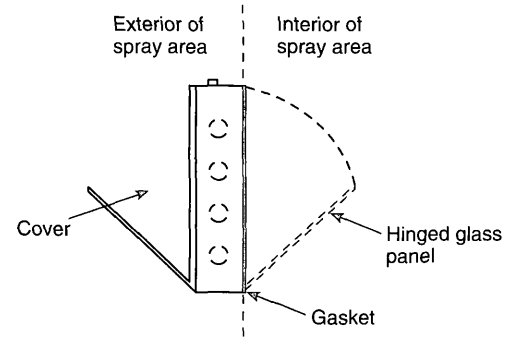

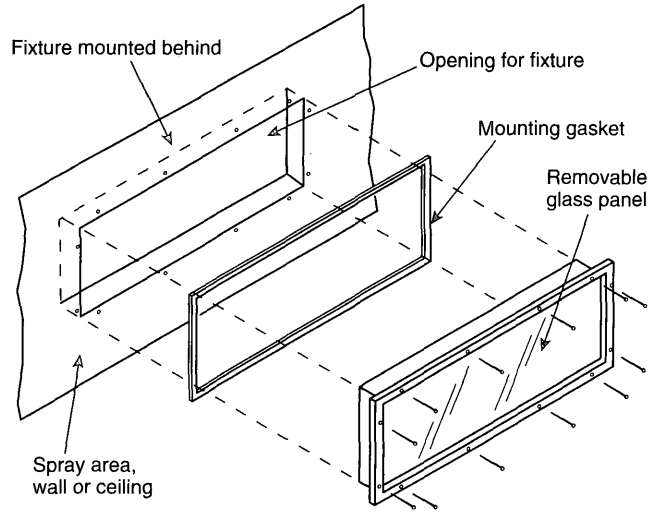

FIGURE 43.1.4.5.3 Examples of Light Fixtures that Are an Integral Part of the Spray Area and Are Serviced from Inside the Spray Area. [33:Figure 6.6.3]

(4) They are supported by a positive mechanical clamp in such a manner that permits the cord to be readily replaced and prevents strain at the cord connections within the terminal enclosure.
(5) They are provided with explosionproof seals where the cord enters junction boxes, fittings, or enclosures.
(6) They are listed for deposits of combustible residues. [**33**:6.8]

43.1.4.8 Portable Electric Lights. Portable electric light fixtures shall not be used in any spray area while spray application operations are being conducted.

Exception: Where portable electric light fixtures are required for use in spaces that are not illuminated by fixed light fixtures within the spray area, they shall meet the requirements of 6.2.2 of NFPA 33. [33:6.9]

43.1.5 Ventilation.

43.1.5.1 General. Ventilating and exhaust systems shall be designed and installed in accordance with the applicable requirements of NFPA 91 except as amended by the requirements of 43.1.5. [**33**:7.1]

43.1.5.2 Performance Requirements. Each spray area shall be provided with mechanical ventilation that is capable of confining and removing vapors and mists to a safe location and is capable of confining and controlling combustible residues, dusts, and deposits. The concentration of the vapors and mists in the exhaust

stream of the ventilation system shall not exceed 25 percent of the lower flammable limit. *(See Annex B of NFPA 33 for additional guidance on determining the lower flammable limit.)*

Exception: In confined spaces, where ventilation might not be capable of providing the necessary ventilation, a properly applied inerting procedure shall be permitted to be used. Such procedures shall meet the applicable requirements of NFPA 69 and shall be acceptable to the AHJ. [33:7.2]

43.1.5.2.1 Spray areas equipped with overspray collection filters shall have visible gauges, audible alarms, or an effective inspection program to ensure that the required air velocity is being maintained. [**33**:7.2.1]

43.1.5.2.2 Powder Coating Systems. Powder coating systems also shall meet the requirements of Section 15.7 of NFPA 33. [**33**:7.2.2]

43.1.5.2.3 Mechanical ventilation shall be kept in operation at all times while spray operations are being conducted and for a sufficient time thereafter to allow the vapors from drying coated objects or material and residues to be exhausted. Where spray operations are conducted automatically without an attendant constantly on duty, the operating controls of the spray apparatus shall be arranged so that the spray apparatus cannot function unless the exhaust fans are operating. [**33**:7.2.3]

43.1.5.3* Make-Up Air. An adequate supply of clean make-up air shall be provided to compensate for the air exhausted from spray operations. The intake for this make-up air shall be located so that the air exhausted from spray operations is not recirculated. [**33**:7.3]

43.1.5.4 Routing of Exhaust Ducts. Air exhausted from spray operations shall be conducted by ducts directly to the outside of the building. Exhaust ducts shall follow the most direct route to the point of discharge, but shall not penetrate a fire wall. The exhaust discharge shall be directed away from any fresh air intakes. The exhaust duct discharge point shall be at least 6 ft (1830 mm) from any exterior wall or roof. The exhaust duct shall not discharge in the direction of any combustible construction that is within 25 ft (7625 mm) of the exhaust duct discharge point nor shall it discharge in the direction of any unprotected opening in any noncombustible or limited-combustible construction that is within 25 ft (7625 mm) of the exhaust duct discharge point. [**33**:7.4]

43.1.5.5 Recirculation of Exhaust.

43.1.5.5.1* Air exhausted from spray areas shall not be recirculated.

Exception: Air exhausted from a spray operation shall be permitted to be recirculated as make-up air for an unmanned spray operation or cascaded to subsequent unmanned spray operations, provided all of the following conditions have been met:

(1) Solid particulates have been removed from the recirculated air.
(2) The concentration of vapors in the exhaust airstream do not exceed 25 percent of the lower flammable limit.
(3) Listed equipment is used to monitor the concentration of vapors in all exhaust airstreams.
(4) An alarm will sound and the spray operation will automatically shut down if the concentration of any vapor in the exhaust airstream exceeds 25 percent of the lower flammable limit.
(5) Equipment installed to process and remove contaminants from the air exhausted from spray operations is approved by the AHJ. [33:7.5.1]

43.1.5.5.2* The provisions of 43.1.5.5.1 shall not disallow the use of recirculated air to occupied spaces. However, other requirements addressing the toxicity and the permissible exposure limits shall also apply. [**33**:7.5.2]

43.1.5.6* Manifolding of Exhaust Ducts. Individual spray booths shall be separately ducted to the building exterior.

Exception No. 1: Multiple cabinet spray booths whose combined frontal area does not exceed 18 ft^2 (1.7 m^2) shall be permitted to be manifolded, if the sprayed materials used will not react and cause ignition of the residue in the ducts.

Exception No. 2: Where treatment of exhaust is necessary for air pollution control or for energy conservation, ducts shall be permitted to be manifolded if all of the following conditions are met:

(1) The sprayed materials used will not react and cause ignition of the residue in the ducts.
(2) No nitrocellulose-based finishing material is used.
(3) An air-cleaning system is provided to reduce the amount of overspray carried into the duct manifold.
(4) Automatic sprinkler protection is provided at the junction of each booth exhaust with the manifold, in addition to the protection required by 43.1.7.
(5) The installation is approved by the AHJ. [33:7.6]

43.1.5.7 Materials of Construction. Exhaust ducts and fasteners shall be constructed of steel.

Exception: Other materials of construction shall be permitted to be used in cases where the conveyed materials are not compatible with steel. [33:7.7]

43.1.5.8* Support of Exhaust Ducts. Exhaust ducts shall be supported to prevent collapse under fire conditions. [**33**:7.8]

43.1.5.8.1 Duct supports shall be designed to carry the weight of the duct system itself, plus the anticipated weight of any residues. If sprinkler protection is provided inside the duct system, then the duct supports also shall be designed to carry the anticipated weight of any accumulation of sprinkler discharge. [**33**:7.8.1]

43.1.5.8.2 Hangers and supports shall be fastened securely to the building or to the structure to avoid vibration and stress on the duct system. [**33**:7.8.2]

43.1.5.8.3 Hangers and supports shall be designed to allow for expansion and contraction. [**33**:7.8.3]

43.1.5.8.4 Exhaust ducts shall not use building walls, floors, ceilings, or roofs as component parts. [**33**:7.8.4]

43.1.5.9 Exhaust Duct Access Openings. Exhaust ducts shall be provided with doors, panels, or other means to facilitate inspection, maintenance, cleaning, and access to fire protection devices. [**33**:7.9]

43.1.5.10 Exhaust Fans and Drives.

43.1.5.10.1 The rotating element of the exhaust fan shall be nonferrous or the fan shall be constructed so that a shift of the impeller or shaft will not permit two ferrous parts of the fan to rub or strike. There shall be ample clearance between the rotating element and fan casing to avoid a fire by friction, necessary allowances being made for ordinary expansion and loading and to prevent contact between moving parts and the duct or fan housing. Fan blades shall be mounted on a shaft that is sufficiently heavy to maintain alignment even when the blades of the fan are heavily loaded. All bearings shall be of the self-lubricating type or shall be lubricated from a point outside the duct and preferably shall be located outside the duct and the booth. [**33**:7.10.1]

43.1.5.10.2 Electric motors that drive exhaust fans shall not be placed inside any spray area unless they meet the provisions of 6.2.2 of NFPA 33. [**33:**7.10.2]

43.1.5.10.3 Belts shall not enter any spray area unless the belt and pulley within the spray area are completely enclosed. [**33:**7.10.3]

43.1.5.11* Drying Areas. Freshly sprayed workpieces shall be dried only in spaces that are ventilated to prevent the concentration of vapors from exceeding 25 percent of the lower flammable limit. *(See also Section 43.4.)* [**33:**7.11]

43.1.6 Storage, Handling, and Distribution of Flammable and Combustible Liquids.

43.1.6.1* General. Storage, handling, and mixing of flammable and combustible liquids shall meet all the applicable requirements of NFPA 30. Storage, handling, and mixing of flammable and combustible liquids at process areas shall also meet the requirements of 43.1.6. [**33:**8.1]

43.1.6.2 Storage in Process Areas.

43.1.6.2.1 There shall be not more than three approved flammable liquid storage cabinets in any single process area without the approval of the AHJ. Storage cabinets shall be listed or shall be designed and constructed to meet the requirements of NFPA 30. Any single cabinet shall contain not more than 120 gal (454 L) of Class I, Class II, or Class IIIA liquids, of which not more than 60 gal (227 L) shall be Class I and Class II liquids. [**33:**8.2.1]

43.1.6.2.2 The quantity of liquid located in the vicinity of spraying operations, but outside of a storage cabinet; an inside storage room; a cut-off room or attached building; or other specific process area that is cut off by at least a 2-hour fire-rated separation from the spraying operations, shall not exceed the quantity given in either (1) or (2), whichever is greater:

(1) A supply for one day
(2) 25 gal (95 L) of Class IA liquids in containers, plus 120 gal (454 L) of Class IB, Class IC, Class II, or Class III liquids in containers, plus 2 portable tanks each not exceeding 660 gal (2500 L) of Class IB, Class IC, Class II, or Class IIIA liquids, plus 20 portable tanks each not exceeding 660 gal (2500 L) of Class IIIB liquids [**33:**8.2.2]

43.1.6.2.3 The quantity of flammable and combustible liquids located in a spray area or in a mixing room adjacent to a spray area shall meet the requirements of 43.1.6.3. [**33:**8.2.3]

43.1.6.3 Mixing.

43.1.6.3.1 Dispensing or transfer of liquids from containers, mixing of liquids, and filling of containers, including portable mixing tanks and "pressure pots," shall be done only in a mixing room or in a spray area. [**33:**8.3.1]

43.1.6.3.2 Mixing rooms shall meet all of the following requirements:

(1) The mixing room shall meet the construction requirements of Section 5.1 of NFPA 33.
(2) The area of the mixing room shall not exceed 150 ft^2 (14 m^2).
(3) The mixing room shall be designed to contain a spill of the contents in the room.
(4) The mixing room or a spray area used for mixing and dispensing operations shall be provided with continuous mechanical ventilation capable of providing not less than 1 ft^3 per minute of air movement per ft^2 of floor area (0.3 m^3/min/m^2) or 150 ft^3/min (4 m^3/min), whichever is greater. The ventilation system shall be in operation at all times.
(5) Dispensing and mixing rooms shall be classified, for purposes of electrical area classification, the same as enclosed spray booths, in accordance with 6.5.4 of NFPA 33.
(6) The mixing room shall be provided with an approved automatic fire protection system that meets all applicable requirements of 43.1.7.
(7) The mixing room shall be provided with portable fire extinguishers located in accordance with NFPA 10.

Exception: See 43.1.6.3.6. [33:8.3.2]

43.1.6.3.3 The amount of liquid permitted in a single spray area shall not exceed 60 gal (227 L). [**33:**8.3.3]

43.1.6.3.4 Where a separate mixing room is provided and the mixing room is located adjacent to or within 6 ft (1830 mm) of an adjacent spray area or areas, as shown in Figure 43.1.6.3.4(a) and Figure 43.1.6.3.4(b), the combined quantities of liquids located in the spray areas and the mixing room shall not exceed 120 gal (454 L).

Exception: See 43.1.6.3.6. [33:8.3.4]

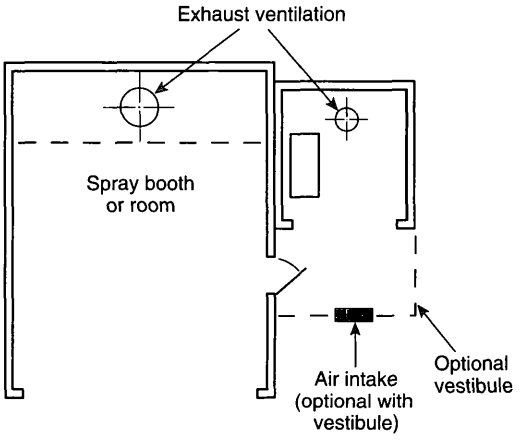

Maximum volume of liquid allowed:

	Gal	L
Spray area	60	227
Spray area and mix room	120	454

FIGURE 43.1.6.3.4(a) Mixing Room Within 6 ft (1830 mm) of Spray Area, Including Maximum Volume of Liquid Allowed. [33:Figure 8.3.4(a)]

43.1.6.3.5 Where a separate mixing room is provided and the mixing room is located 6 ft (1830 mm) or more from an adjacent spray area or areas, the quantity of liquid permitted in the mixing room shall not exceed 2 gal/ft^2 (80 L/m^2), up to a maximum of 300 gal (1135 L), as shown in Figure 43.1.6.3.5.

Exception: See 43.1.6.3.6. [33:8.3.5]

43.1.6.3.6 Where the quantities of liquids required or the floor area necessary to provide a suitable mixing room exceeds the limits specified in 43.1.6.3.2 through 43.1.6.3.5, the mixing room shall meet all applicable requirements of NFPA 30. [**33:**8.3.6]

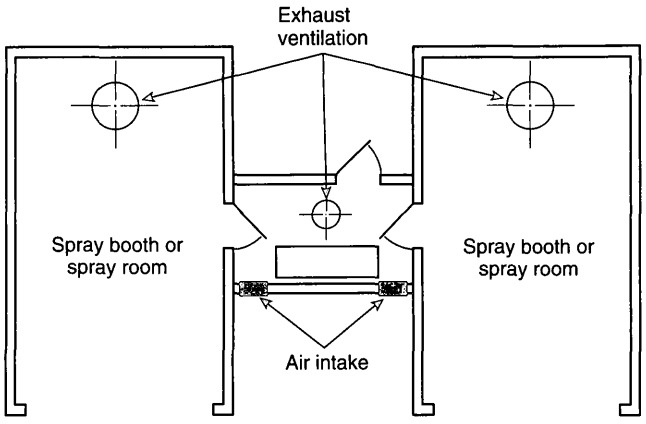

Maximum volume of liquid allowed:

	Gal	L
Each spray area	60	227
Mix room and all spray areas	120	454

FIGURE 43.1.6.3.4(b) Mixing Room Within 6 ft (1830 mm) of Spray Area and with Direct Entry to Spray Area, Including Maximum Volume of Liquid Allowed. [33:Figure 8.3.4(b)]

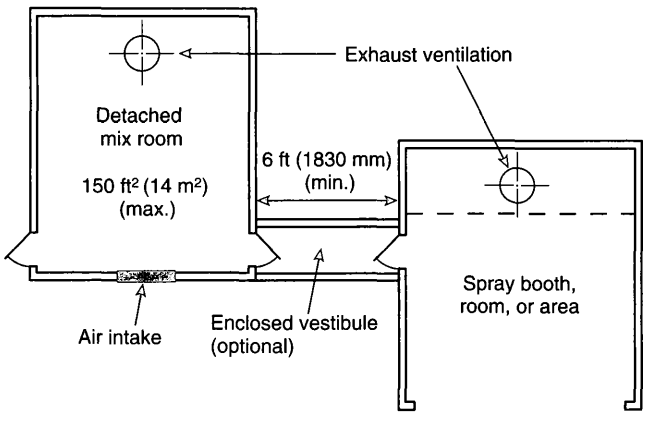

Maximum volume of liquid allowed:

	Gal	L
Spray area	60	227
Mix room	300	1135

FIGURE 43.1.6.3.5 Mixing Room 6 ft (1830 mm) or More from Spray Area, Including Maximum Volume of Liquid Allowed. [33:Figure 8.3.5]

43.1.6.4 Distribution Systems — Piping.

43.1.6.4.1* Piping systems that convey flammable or combustible liquids between storage tanks, mixing rooms (paint kitchens), and spray areas shall be of steel or other material having comparable properties of resistance to heat and physical damage. Piping systems shall be properly bonded and grounded. [33:8.4.1]

43.1.6.4.2* Piping systems within the spray area shall be of steel or material having comparable heat and physical resistance where possible. Where tubing or hose is used, a shut-off valve shall be provided on the steel pipe at the connection. [33:8.4.2]

43.1.6.4.3* Tubing or hose shall be inspected and replaced as necessary. Replacement tubing or hose shall be that recommended by the equipment manufacturer. [33:8.4.3]

43.1.6.4.4 Where a pump is used to supply the liquid used in the spray application process, piping, tubing, hose, and other accessories shall be designed to withstand the maximum working pressure of the pump, or means shall be provided to limit the discharge pressure of the pump. [33:8.4.4]

43.1.6.4.5* Where a pump is used to supply the liquid used in the spray application process, an automatic means shall be provided to shut off the supply of liquid in event of fire. When pressurized tanks larger than 5 gal (19 L) are used to supply the liquid used in the spray application process, an automatic means shall be provided to shut off liquid flow at the tank outlet in the event of fire. [33:8.4.5]

43.1.6.4.6 All pressure tubing, hose, and couplings shall be inspected at regular intervals. With the hose extended, the hose and couplings shall be tested using the "in-service maximum operating pressure." Any hose showing material deteriorations, signs of leakage, or weakness in its carcass or at the couplings shall be replaced. [33:8.4.6]

43.1.6.5 Distribution Systems — General.

43.1.6.5.1 Liquids shall be transported by means of closed containers, approved safety cans, or approved portable tanks, or shall be transferred by means of a piping system. Open containers shall not be used for moving or storing liquids. [33:8.5.1]

43.1.6.5.2* Wherever liquids are transferred from one container to another, both containers shall be effectively bonded and grounded to dissipate static electricity. [33:8.5.2]

43.1.6.5.3 Containers that supply spray nozzles shall be of the closed type or shall be provided with metal covers that are kept closed. Containers that do not rest on the floor shall have supports or shall be suspended by wire cables. Containers that supply spray nozzles by gravity flow shall not exceed 10 gal (38 L) capacity. [33:8.5.3]

43.1.6.5.4 Original shipping containers shall not be subjected to air pressure for supplying spray nozzles. [33:8.5.4]

43.1.6.5.5 Containers that are pressurized to supply spray nozzles, air storage tanks, and coolers shall comply with all applicable requirements of the ASME *Boiler and Pressure Vessel Code*, Section VIII, for construction, tests, and maintenance.

Exception: The following do not need to meet this requirement.

(1) Pressure containers less than 6 in. (150 mm) in diameter
(2) Pressure containers that operate at less than a gauge pressure of 15 psi (103 kPa)
(3) Siphon-type spray cups [33:8.5.5]

43.1.6.5.6 If a heater is used to heat the liquid being sprayed, it shall be low-pressure steam, low-pressure hot water, or electric. If electric, it shall be approved and listed for the specific location in which it is used. *(See Chapter 6 of NFPA 33.)* Heaters shall not be located in spray booths or other locations subject to the accumulation of deposits of combustible residue. Agitators, if used, shall be driven by compressed air, water, low-pressure steam, or electricity. If powered by an electric motor, the motor shall meet the requirements of 43.1.4. [**33:**8.5.6]

43.1.7 Protection.

43.1.7.1* General. Spray areas, which include by definition any associated exhaust plenums and exhaust ductwork, any particulate filters, any solvent concentrator units, any recirculation air supply units, and mixing rooms shall be protected with an approved automatic fire protection system. [**33:**9.1]

43.1.7.1.1 The automatic fire protection system shall be permitted to be, and shall be installed in accordance with, any of the following:

(1) An automatic water sprinkler system that meets all applicable requirements of NFPA 13
(2) An automatic foam water sprinkler system that meets all applicable requirements of NFPA 16
(3) A carbon dioxide extinguishing system that meets all applicable requirements of NFPA 12
(4) A dry chemical extinguishing system that meets all applicable requirements of NFPA 17
(5) A gaseous agent extinguishing system that meets all applicable requirements of NFPA 2001 [**33:**9.1.1]

43.1.7.1.2 The automatic fire protection system shall also meet all applicable requirements of 43.1.7.2 and 43.1.7.3. [**33:**9.1.2]

43.1.7.2 Continuous Spray Application Operations.

43.1.7.2.1 For continuous spray application operations, activation of the automatic fire protection system shall automatically accomplish all of the following:

(1) Activate a local alarm in the vicinity of the spraying operation
(2) Transmit an alarm signal to the facility's fire alarm system, if such a system is provided
(3) Shut down the coating material delivery system
(4) Shut down all spray application operations
(5) Stop any conveyors into and out of the spray area [**33:**9.2.1]

43.1.7.2.1.1 For continuous spray application operations, the additional requirements of Section 9.7 of NFPA 33, for automated powder application equipment, or Section 9.8 of NFPA 33, for automated liquid electrostatic spray application equipment, whichever is applicable, shall also apply. [**33:**9.2.1.1]

43.1.7.2.2 Emergency Shutdown. For continuous spray application operations, one or more manual emergency system shutdown stations shall be installed to serve each spray area. When activated, the stations shall accomplish at least the functions listed in 9.2.1(1), 9.2.1(3), 9.2.1(4), and 9.2.1(5) of NFPA 33. At least one such station shall be within ready access of operating personnel. If access to this station is likely to involve exposure to danger, an additional station shall be located adjacent to an exit from the area. [**33:**9.2.2]

43.1.7.3 Ventilation Systems. Air make-up systems and spray area exhaust systems shall remain functioning during any fire alarm condition.

Exception No. 1: Where the type of automatic fire protection system requires that ventilation be discontinued, air make-up systems and spray area exhaust systems shall be permitted to be shut down and dampers shall be permitted to close.

Exception No. 2: For powder coating systems, the requirements of Section 9.7 of NFPA 33 shall be met instead of those of this section. [33:9.3]

43.1.7.4* Automatic Sprinkler Systems.

43.1.7.4.1 The automatic sprinkler system shall be a wet pipe system, a dry pipe system, a preaction system, or an open-head deluge system, whichever is most appropriate for the spray operation being protected. [**33:**9.4.1]

43.1.7.4.2 The automatic sprinkler system shall be designed for Extra Hazard (Group 2) occupancies, as defined in NFPA 13.

Exception: For spray application of styrene cross-link thermoset resins, Section 17.3 of NFPA 33 shall apply. [33:9.4.2]

43.1.7.4.3 The water supply shall be sufficient to supply all sprinklers likely to open in any one fire incident without depleting the available water for use in hose streams. [**33:**9.4.3]

43.1.7.4.4 Where sprinklers are installed to protect spray areas and mixing rooms only, water shall be permitted to be supplied from the domestic water system, subject to the approval of the AHJ and provided the domestic supply can meet the design criteria for Extra Hazard (Group 2) occupancies, as defined in NFPA 13. [**33:**9.4.4]

43.1.7.4.5 The sprinklers for each spray area and mixing room shall be controlled by a separate, accessible, listed indicating valve. [**33:**9.4.5]

43.1.7.4.6 Sprinklers in stacks or ducts outside the building shall be permitted to be of a type not subject to freezing or shall be manually operated open heads. [**33:**9.4.6]

43.1.7.4.7 Sprinklers protecting spray areas and mixing rooms shall be protected against overspray residue so that they will operate quickly in event of fire. [**33:**9.4.7]

43.1.7.4.7.1 Sprinklers shall be permitted to be covered by cellophane bags having a thickness of 0.003 in. (0.08 mm) or less or by thin paper bags. These coverings shall be replaced frequently so that heavy deposits of residue do not accumulate. [**33:**9.4.7.1]

43.1.7.4.7.2 Sprinklers that have been painted or coated by overspray or residues shall be replaced with new sprinklers. [**33:**9.4.7.2]

43.1.7.5* Automatic Carbon Dioxide, Dry Chemical, and Clean Agent Systems. The fire protection system shall be capable of discharging its contents into the entire protected area simultaneously, including the exhaust plenum and exhaust ductwork. [**33:**9.5]

43.1.7.6 Portable Fire Extinguishers. Portable fire extinguishers shall be provided and located in accordance with NFPA 10. [33:9.6]

43.1.7.7* Protection for Automated Powder Application Equipment.

43.1.7.7.1 Automated powder application equipment, both listed and unlisted, shall be further protected by listed optical flame detection, installed and supervised in accordance with *NFPA 72*. The optical flame detection shall, in event of ignition, react to the presence of flame within one-half (0.5) second and shall accomplish all of the following:

(1) Stop any conveyors into and out of the spray area
(2) Shut off ventilation
(3) Shut off application, transfer, and powder collection equipment
(4) Close segregation dampers in associated ductwork to interrupt airflows from application equipment to powder collectors
(5) Disconnect power to the high voltage elements in the spray area and de-energize the system [33:9.7.1]

43.1.7.7.2 Automated powder application equipment that is unlisted shall be further protected by the following:

(1) In addition to meeting the requirements in 9.2.1 and 9.7.1 of NFPA 33, the optical flame detection system shall also activate the automatic fire protection system, if provided.
(2) Automatic electrostatic equipment enclosures inside the booth shall be protected with an approved automatic fire protection system. Activation of this system shall automatically accomplish the requirements of 9.2.1 and 9.7.1 of NFPA 33.
(3) Manual activation stations shall be installed. At least one such station shall be within ready access of operating personnel. If access to this station is likely to involve exposure to danger, an additional station shall be located adjacent to an exit from the area. These devices shall activate the fire protection system as specified in 9.1.1 of NFPA 33 for the affected automated zone, if applicable, and accomplish the requirements in 9.7.1 of NFPA 33. [33:9.7.2]

43.1.7.8* Protection for Automated Liquid Electrostatic Spray Application Equipment.

43.1.7.8.1 Automated liquid electrostatic spray application equipment, both listed and unlisted, shall be further protected by listed optical flame detection, installed and supervised in accordance with *NFPA 72*. The optical flame detection shall, in event of ignition, react to the presence of flame within one-half (0.5) second and shall accomplish all of the following:

(1) Meet all of the requirements of 9.2.1 of NFPA 33
(2) Disconnect power to the high voltage elements in the spray area and de-energize the system [33:9.8.1]

43.1.7.8.2 Automated liquid electrostatic spray application equipment that is unlisted shall be protected further by the following:

(1) In addition to meeting the requirements in 9.8.1 of NFPA 33, the optical flame detection system shall also activate one of the following:
    (a) An open head deluge system designed to discharge a minimum density of 0.6 gpm/ft^2 (24.4 mm/min) over each affected automated zone
    (b) A carbon dioxide extinguishing system
    (c) A dry chemical extinguishing system
    (d) A gaseous agent extinguishing system
(2) Manual activation stations shall be installed. At least one such station shall be within ready access of operating personnel. If access to this station is likely to involve exposure to danger, an additional station shall be located adjacent to an exit from the area. These devices shall activate the fire protection system as specified in 9.8.2(1) of NFPA 33 for the affected automated zone and accomplish the requirements in 9.8.1(2) of NFPA 33.
(3) A wet pipe sprinkler system shall also be provided throughout the spray booth. This system shall meet all the applicable requirements of NFPA 13 for Extra Hazard (Group 2) occupancies.
(4) Automatic electrostatic equipment enclosures inside the booth systems shall be protected with an approved automatic fire protection system. Activation of this system shall automatically accomplish the requirements of 9.8.1(2) of NFPA 33. [33:9.8.2]

43.1.8 Operations and Maintenance.

43.1.8.1* General. Maintenance procedures shall be established to ensure that all spray application apparatus and processes are operated and maintained in accordance with the manufacturers' specifications and the requirements of this *Code*. Maintenance shall be the responsibility of the users of the apparatus and processes. [33:10.1]

43.1.8.1.1* Spray application operations shall not be conducted outside of predetermined spray areas. [33:10.1.1]

43.1.8.1.2 Inspection of extinguishing systems shall be conducted to ensure that the performance of the extinguishing system components will not be affected by overspray and residues. [33:10.1.2]

43.1.8.2* Combustible Deposits. All spray areas shall be kept free of the accumulation of deposits of combustible residues. Combustible coverings (thin paper, plastic, and so forth) and strippable coatings shall be permitted to be used to facilitate cleaning operations in spray areas. If residue accumulates to excess in booths, duct or duct discharge points, or other spray areas, then all spraying operations shall be discontinued until conditions are corrected. [33:10.2]

43.1.8.3 High-Pressure Hose Lines. High-pressure hose lines that convey flammable or combustible coating material in "airless" spray application operations shall be inspected frequently and shall be repaired or replaced, as necessary. Hose lines and equipment shall be located so that, in the event of a leak or rupture, coating material will not be discharged into any space having a source of ignition. [33:10.3]

43.1.8.4 Maintenance Procedures.

43.1.8.4.1 Maintenance procedures shall be established to ensure that overspray collector filters are replaced before excessive restriction to airflow occurs. Overspray collectors shall be inspected after each period of use, and clogged filters shall be discarded and replaced. [33:10.4.1]

43.1.8.4.2 All discarded overspray collector filters, residue scrapings, and debris contaminated with residue shall be removed immediately to a designated storage location or placed in a water-filled metal container and disposed of at the close of the day's operation unless maintained completely submerged in water. [**33:**10.4.2]

43.1.8.5* Waste Containers.

43.1.8.5.1 Approved waste containers shall be provided wherever rags or waste are impregnated with sprayed material, and all such rags or waste shall be deposited therein immediately after use. The contents of waste containers shall be placed in a designated storage location. [**33:**10.5.1]

43.1.8.5.2 Waste containers containing flammable liquids shall be located in ventilated areas that meet the requirements of 43.1.5. Such areas shall also meet the electrical area classification requirements of 6.5.5 of NFPA 33. [**33:**10.5.2]

43.1.8.5.3* Waste containers for flammable liquids shall be constructed of conductive materials and shall be bonded and grounded. [**33:**10.5.3]

43.1.8.5.4 Flammable liquids waste containers shall be handled and stored in accordance with Chapter 8 of NFPA 33. [**33:**10.5.4]

43.1.8.6 Clothing. Employees' clothing contaminated with sprayed material shall not be left on the premises overnight unless kept in metal lockers. [**33:**10.6]

43.1.8.7 Cleaning Operations.

43.1.8.7.1 Scope. Paragraph 43.1.8.7 shall apply to the use of flammable or combustible liquids for the flushing and cleaning of equipment. [**33:**10.7.1]

43.1.8.7.2 Liquids. Class I and Class II liquids used in cleaning operations shall be in original shipping containers or in listed safety containers. [**33:**10.7.2]

43.1.8.7.3 Location. Cleaning operations using flammable or combustible liquids shall be conducted inside a spray area with ventilating equipment operating or in ventilated areas that meet the requirements of 43.1.5. Such areas shall also meet the electrical area classification requirements of 6.5.5 of NFPA 33. [**33:**10.7.3]

43.1.8.7.4* Equipment. Equipment using flammable or combustible liquids shall meet the requirements of 6.5.5 of NFPA 33 and shall be bonded and grounded. [**33:**10.7.4]

43.1.8.7.5 Manual Cleaning. Individual manual cleaning operations shall be limited to not more than one gallon of flammable or combustible liquids for each cleaning operator. [**33:**10.7.5]

43.1.8.7.6 Liquid Storage. Flammable and combustible liquids shall be handled and stored in accordance with 43.1.6. Containers used for handling, storage, or recovery of Class I liquids shall be constructed of conductive materials and shall be bonded and grounded. [**33:**10.7.6]

43.1.8.8 Solvent Distillation Units (Solvent Recyclers).

43.1.8.8.1 Scope.

43.1.8.8.1.1 Paragraph 43.1.8.8 shall apply to solvent distillation units having distillation chambers or still pots that do not exceed 60 gal (227 L) capacity and are used to recycle Class I, Class II, and Class IIIA liquids. [**33:**10.8.1.1]

43.1.8.8.1.2 Paragraph 43.1.8.8 shall not apply to research, testing, or experimental processes; to distillation processes carried out in petroleum refineries, chemical plants, or distilleries, or to distillation equipment used in dry cleaning operations. [**33:**10.8.1.2]

43.1.8.8.2 Equipment. Solvent distillation units shall be approved or shall be listed in accordance with UL 2208, *Standard for Solvent Distillation Units.* [**33:**10.8.2]

43.1.8.8.3 Solvents. Solvent distillation units shall only be used to distill liquids for which they have been investigated and which are indicated on the unit's marking or instruction manual. Unstable or reactive liquids or materials shall not be processed unless they have been specifically indicated on the system's markings or in the instruction manual. [**33:**10.8.3]

43.1.8.8.4 Location. Solvent distillation units shall only be used in locations in accordance with their approval or listing. They shall not be used in basements. They shall be located away from potential sources of ignition, as indicated on the unit's marking. [**33:**10.8.4]

43.1.8.8.5* Liquid Storage. Distilled liquids and liquids awaiting distillation shall be stored in accordance with Chapter 1 through Chapter 6 of NFPA 33. [**33:**10.8.5]

43.1.8.9* Spontaneous Ignition Hazards. The same spray booth shall not be alternately used for different types of coating materials if the combination of the materials is conducive to spontaneous ignition, unless all deposits of the first-used coating material are removed from the booth and exhaust ducts prior to spraying with the second coating material. [**33:**10.9]

43.1.8.10* Chlorinated Solvents. Coating materials containing chlorinated solvents shall not be used with spray application apparatus or fluid-handling equipment if the chlorinated solvent will come into contact with aluminum within a piping system, pump, enclosed container, or any enclosure that is capable of being pressurized by the potential reaction. This shall apply even if the container or system has been constructed with pressure relief devices. [**33:**10.10]

43.1.8.11 Smoking. NO SMOKING OR OPEN FLAMES signs in large letters on contrasting color background shall be conspicuously posted at all spray areas and paint storage rooms. [**33:**10.11]

43.1.8.12* Hot Work. Welding, cutting, and other spark-producing operations shall not be permitted in or adjacent to spray areas until a written permit authorizing such work has been issued. The permit shall be issued by a person in authority following his or her inspection of the area to ensure that precautions have been taken and will be followed until the job is completed. [**33:**10.12]

43.2 Automated Electrostatic Spray Equipment. For information on the installation and use of automated electrostatic spray application apparatus, see Chapter 11 of NFPA 33.

43.3 Handheld Electrostatic Spray Equipment. For information on the installation and use of handheld electrostatic spray application apparatus, see Chapter 12 of NFPA 33.

43.4 Drying, Curing, or Fusion Processes. For information on drying, curing, or fusion apparatus used in connection with spray application of flammable and combustible materials, see Chapter 13 of NFPA 33.

43.5 Miscellaneous Spray Operations.

43.5.1 Vehicle Undercoating and Body Lining.

43.5.1.1 Spray undercoating or spray body lining of vehicles that is conducted in an area that has adequate natural or mechanical ventilation shall be exempt from the provisions of this *Code*, if all of the requirements of 43.5.1.1.1 through 43.5.1.1.4 are met. [**33:**14.1.1]

43.5.1.1.1 There shall be no open flames or spark-producing equipment within 20 ft (6100 mm) of the spray operation while the spray operation is being conducted. [**33:**14.1.1.1]

43.5.1.1.2 There shall be no drying, curing, or fusion apparatus in use within 20 ft (6100 mm) of the spray operation while the spray operation is being conducted. [**33:**14.1.1.2]

43.5.1.1.3 Any solvent used for cleaning procedures shall have a flash point not less than 100°F (37.8°C). [**33:**14.1.1.3]

43.5.1.1.4 The coating or lining materials used shall meet one of the following criteria:

(1) Be no more hazardous than UL Class 30-40, when tested in accordance with UL 340, *Test for Comparative Flammability of Liquids*
(2) Not contain any solvent or component that has a flash point below 100°F (37.8°C)
(3) Consist only of Class IIIB liquids and not include any organic peroxide catalyst [**33:**14.1.1.4]

43.5.1.2 Noncomplying Undercoating Operations. Spray undercoating operations that do not meet the requirements of 43.5.1 shall meet all applicable requirements of this *Code* pertaining to spray finishing operations. [**33:**14.1.2]

43.5.2 Preparation Workstations. If spray finishing operations are performed at or in a preparation workstation, the preparation workstation shall be considered an unenclosed spray area and shall meet all requirements of an unenclosed spray area.

Exception: A preparation workstation that is designed and operated in accordance with 43.5.3 shall be considered a limited finishing workstation and not an unenclosed spray area. [33:14.2]

43.5.3 Limited Finishing Workstations. A limited finishing workstation shall be designed and operated in accordance with the requirements of 43.5.3.1 through 43.5.3.9. [**33:**14.3]

43.5.3.1 A limited finishing workstation shall be designed and constructed to have all of the following:

(1) A dedicated make-up air supply and air supply plenum
(2) Curtains or partitions that are noncombustible or limited combustible, as defined in NFPA 220, or that can successfully pass Test Method 2 of NFPA 701
(3) A dedicated mechanical exhaust and filtration system
(4) An approved automatic extinguishing system that meets the requirements of 43.1.7 [**33:**14.3.1]

43.5.3.2 The amount of material sprayed in a limited finishing workstation shall not exceed 1 gal (3.8 L) in any 8-hour period. [**33:**14.3.2]

43.5.3.3 The limited finishing workstation shall meet all applicable requirements of 43.1.2 through 43.1.8 and Section 43.10. [**33:**14.3.3]

43.5.3.4 Curtains or partitions shall be fully closed during any spray application operations. [**33:**14.3.4]

43.5.3.5 The area inside the curtains or partitions shall be considered a Class I, Division 1; Class I, Zone 1; or Class II, Division 1 hazardous (classified) location, as defined by NFPA 70. [**33:**14.3.5]

43.5.3.5.1 A Class I, Division 2; Class I, Zone 2; or Class II, Division 2 hazardous (classified) location, as applicable, shall extend horizontally and vertically beyond the volume enclosed by the outside surface of the curtains or partitions as follows:

(1) 5 ft (1525 mm) horizontally and 3 ft (915 mm) vertically, as shown in Figure 43.5.3.5.1(a), if the spray application equipment is interlocked with the exhaust ventilation system
(2) 10 ft (3050 mm) horizontally and 3 ft (915 mm) vertically, as shown in Figure 43.5.3.5.1(b), if the spray application equipment is not interlocked with the exhaust ventilation system [**33:**14.3.5.1]

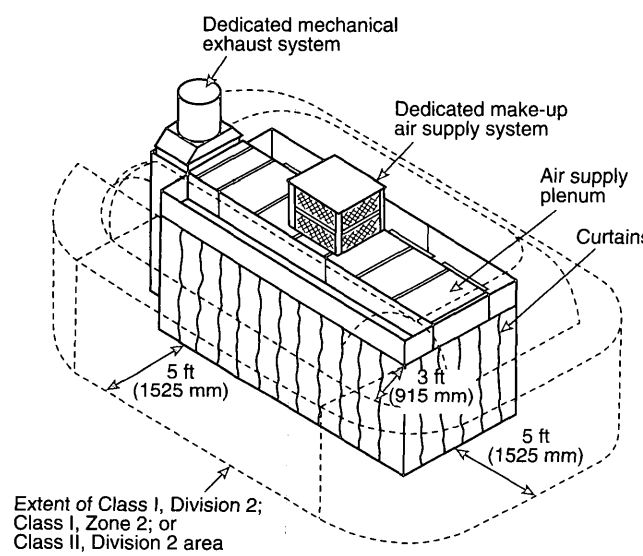

FIGURE 43.5.3.5.1(a) Class I, Division 2; Class I, Zone 2; or Class II, Division 2 Locations Adjacent to a Limited Finishing Workstation with Exhaust Ventilation Interlocked with Spray Equipment. [33:Figure 14.3.5.1(a)]

43.5.3.5.2 For the purposes of this subsection, *interlocked* shall mean that the spray application equipment cannot be operated unless the exhaust ventilation system is operating and functioning properly and spray application is automatically stopped if the exhaust ventilation system fails. [**33:**14.3.5.2]

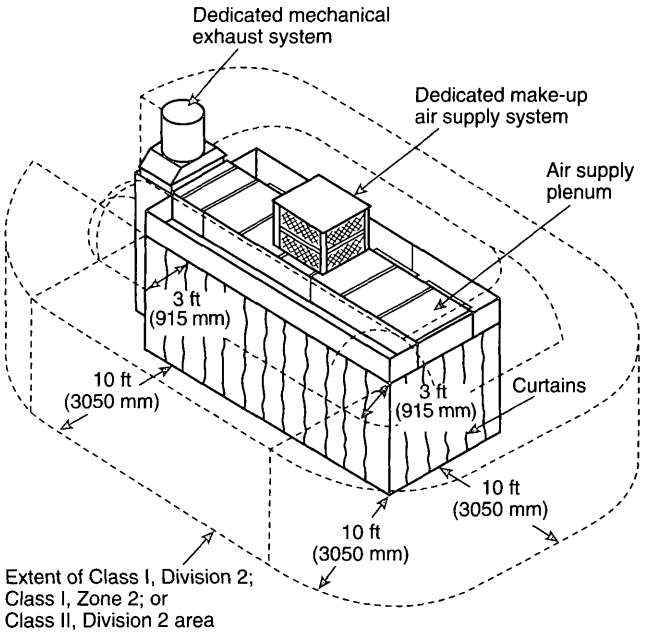

FIGURE 43.5.3.5.1(b) Class I, Division 2; Class I, Zone 2; or Class II, Division 2 Locations Adjacent to a Limited Finishing Workstation with Exhaust Ventilation Not Interlocked with Spray Equipment. [33:Figure 14.3.5.1(b)]

43.5.3.6 Any limited finishing workstation used for spray application operations shall not be used for any operation that is capable of producing sparks or particles of hot metal or for operations that involve open flames or electrical utilization equipment capable of producing sparks or particles of hot metal. [**33:**14.3.6]

43.5.3.7 Drying, curing, or fusion apparatus shall be permitted to be used in a limited finishing workstation if they meet the requirements of Section 43.4. [**33:**14.3.7]

43.5.3.8 Portable spot-drying, curing, or fusion apparatus shall be permitted to be used in a limited finishing workstation, provided that it is not located within the hazardous (classified) location defined in 43.5.3.5 when spray application operations are being conducted. [**33:**14.3.8]

43.5.3.9 Recirculation of exhaust air shall be permitted only if all provisions of Section 7.5 of NFPA 33 are met. [**33:**14.3.9]

43.6 Powder Coating. For information on the installation and use of powder coating application apparatus, see Chapter 15 of NFPA 33.

43.7 Organic Peroxides and Plural Component Coatings.

43.7.1* Scope. Section 43.7 shall apply to the spray application operations that involve the use of organic peroxide formulations and other plural component coatings.

Exception: As covered in Section 43.8. [33:16.1]

43.7.2 General. Spray application operations that involve the use of organic peroxide formulations and other plural component coatings shall be conducted in spray areas that are protected by approved automatic sprinkler systems that meet the requirements of 43.1.7. [**33:**16.2]

43.7.3 Prevention of Contamination. Measures shall be taken to prevent the contamination of organic peroxide formulations with any foreign substance. Only spray guns and related handling equipment that are specifically manufactured for use with organic peroxide formulations shall be used. Separate fluid-handling equipment shall be used for the resin and for the catalyst, and they shall not be interchanged. [**33:**16.3]

43.7.3.1 The wetted portions of equipment and apparatus that handle organic peroxide formulations shall be constructed of stainless steel (300 series), polyethylene, Teflon®, or other materials that are specifically recommended for the application. [**33:**16.3.1]

43.7.3.2* Measures shall be taken to prevent contamination of organic peroxide formulations with dusts or overspray residues resulting from the sanding or spray application of finishing materials. [**33:**16.3.2]

43.7.3.3 Spills of organic peroxide formulations shall be promptly removed so there are no residues. Spilled material shall be permitted to be absorbed by using a noncombustible absorbent and then disposed of promptly in accordance with the manufacturers' recommendations. [**33:**16.3.3]

43.7.4 Storage of Organic Peroxides. Organic peroxide formulations shall be stored in accordance with the requirements of NFPA 432 and with the manufacturers' recommendations. [**33:**16.4]

43.7.5 Handling of Organic Peroxides. Measures shall be taken to prevent handling of organic peroxide formulations to avoid shock and friction, which can cause decomposition and violent reaction. [**33:**16.5]

43.7.6* Mixing of Organic Peroxides with Promoters. Organic peroxide formulations shall not be mixed directly with any cobalt compounds or other promoters or accelerators, because violent decomposition or explosion can result. To minimize the possibility of such accidental mixing, these materials shall not be stored adjacent to each other. [**33:**16.6]

43.7.7 Smoking. Smoking shall be prohibited, NO SMOKING signs shall be prominently displayed, and only nonsparking tools shall be used in any area where organic peroxide formulations are stored, mixed, or applied. [**33:**16.7]

43.7.8 Trained Personnel. Only designated personnel trained to use and handle organic peroxide formulations shall be permitted to use these materials. [**33:**16.8]

43.7.9 Material Safety Data Sheets. Where organic peroxide formulations are used, the Material Safety Data Sheet (MSDS), or its equivalent, shall be consulted. [**33:**16.9]

43.8 Styrene Cross-Linked Composites Manufacturing (Glass Fiber Reinforced Plastics).

43.8.1* Scope. Section 43.8 shall apply to manufacturing processes involving spray application of styrene cross-linked thermoset resins (commonly known as glass fiber reinforced plastics) for hand lay-up or spray fabrication methods, that is, resin application areas, and where the processes do not produce vapors that exceed 25 percent of the lower flammable limit. [**33:**17.1]

43.8.2 Resin Application Equipment. The equipment and apparatus for spray application of the resin shall be installed and used in accordance with the requirements of Sections 43.7 and 43.8. [33:17.2]

43.8.3* Fire Protection. Resin application areas shall be protected by an automatic sprinkler system that is designed and installed in accordance with the requirements of NFPA 13 for at least Ordinary Hazard, Group 2 occupancies. [33:17.3]

43.8.4 Resin Storage. The quantity of flammable and combustible liquids located in the vicinity of resin application areas outside of an inside storage room or storage cabinet in any one process area shall not exceed the greater of any of the following:

(1) A supply for one day
(2) The sum of 25 gal (95 L) of Class IA liquids in containers and 120 gal (454 L) of Class IB, IC, II, or III liquids in containers
(3) One approved portable tank not exceeding 660 gal (2500 L) of Class IB, IC, II, or III liquids [33:17.4]

43.8.5 Electrical and Other Hazards.

43.8.5.1 Electrical wiring and utilization equipment located in resin application areas that is not subject to deposits of combustible residues shall be installed in accordance with the requirements of NFPA 70 for ordinary hazard locations. [33:17.5.1]

43.8.5.2 Electrical wiring and utilization equipment located in resin application areas that is subject to deposits of combustible residues shall be listed for such exposure and shall be suitable for Class I, Division 1; Class I, Zone 1; or Class II, Division 1 locations, whichever is applicable. Such wiring and utilization equipment shall be installed in accordance with the requirements of NFPA 70 for the hazardous (classified) location involved. [33:17.5.2]

43.8.5.3* All metal parts of resin application areas, exhaust ducts, ventilation fans, spray application equipment, workpieces or containers that receive the spray stream, and piping that conveys flammable or combustible liquids shall be electrically grounded. [33:17.5.3]

43.8.5.4 Space heating appliances or other hot surfaces in resin application areas shall not be located where deposits or residues accumulate. [33:17.5.4]

43.8.6 Ventilation.

43.8.6.1 Mechanical ventilation shall be designed and installed throughout the resin application area in accordance with the requirements of 43.1.5.

Exception: Buildings that are not enclosed for at least three-quarters of their perimeter shall not be required to meet this requirement. [33:17.6.1]

43.8.6.2 Local ventilation shall be provided where personnel are under or inside of the workpiece being fabricated. [33:17.6.2]

43.8.7 Use and Handling.

43.8.7.1 The storage and use of organic peroxide formulations shall meet the requirements of Section 43.7. [33:17.7.1]

43.8.7.2 Excess catalyzed resin, while still in the liquid state, shall be drained into an open-top, noncombustible container. Enough water shall be added to the container to cover the contained resin by at least 2 in. (50 mm). [33:17.7.2]

43.8.7.3 In areas where chopper guns are used, paper, polyethylene film, or similar material shall be provided to cover the exposed surfaces of the walls and floor to allow the build-up of overchop to be removed. When the accumulated overchop has reached an average thickness of 2 in. (50 mm), it shall be disposed of after a minimum curing time of 4 hours.

Exception: A single day's accumulation of more than an average of 2 in. (50 mm) shall be permitted, provided that it is properly cured and disposed of before operations are resumed. [33:17.7.3]

43.8.7.3.1 Used paper, polyethylene film, or similar material shall be placed in a noncombustible container and disposed of when removed from the facility. [33:17.7.3.1]

43.9 Dipping and Coating Processes.

43.9.1* Dipping and coating processes in which articles or materials are passed through tanks, vats, containers, or process equipment that contain flammable or combustible liquids shall comply with NFPA 34, *Standard for Dipping and Coating Processes Using Flammable or Combustible Liquids*, and Section 43.9.

43.9.1.1 Section 43.9 shall not apply to processes involving noncombustible liquids except when the waterborne, water-based, and water-reducible materials contain flammable or combustible liquids or produce combustible deposits or residues. [34:1.1.2; 34:1.1.3]

43.9.1.2 Section 43.9 shall not apply to the use of a liquid that does not have a fire point when tested in accordance with ASTM D 92, *Standard Test Method for Flash and Fire Points by Cleveland Open Cup*, up to the boiling point of the liquid or up to a temperature at which the sample being tested shows an obvious physical change. [34:1.1.3 Exception]

43.9.1.3* Section 43.9 shall not apply to quench tanks that are addressed in Chapter 51 of this *Code*.

43.9.2* Where unusual industrial processes are involved, the AHJ shall be permitted to require additional safeguards or modifications to the requirements of NFPA 34, provided equivalent safety is achieved.

43.10 Training.

43.10.1* General. All personnel involved in the spray application processes covered by this *Code* shall be instructed in the following:

(1) Potential safety and health hazards
(2) Operational, maintenance, and emergency procedures required
(3) Importance of constant operator awareness [33:18.1]

43.10.1.1 Personnel required to handle or use flammable or combustible materials shall be instructed in the safe handling, storage, and use of the materials, as well as emergency procedures. [33:18.1.1]

43.10.1.2* All personnel required to enter or to work within confined or enclosed spaces shall be instructed as to the nature of the hazard involved, the necessary precautions to be taken, and the use of protective and emergency equipment required. [33:18.1.2]

43.10.1.3 All personnel shall be instructed in the proper use, maintenance, and storage of all emergency, safety, or personal protective equipment that they might be required to use in their normal work performance. [**33:**18.1.3]

43.10.1.4 Documentation shall be employed to record the type and date of training provided to each individual involved in these processes. [**33:**18.1.4]

Chapter 44 Solvent Extraction

44.1 General. Solvent extraction plants shall comply with NFPA 36, *Standard for Solvent Extraction Plants,* and Chapter 44.

44.2 Application.

44.2.1 Chapter 44 shall apply to the following:

(1) The commercial scale extraction processing of animal and vegetable oils and fats by the use of Class I flammable hydrocarbon liquids, hereinafter referred to as solvents
(2) Any equipment and buildings that are located within 100 ft (30 m) of the extraction process

Exception: As provided for in 44.2.1(3) through 44.2.1(6).

(3) The unloading, storage, and handling of solvents, regardless of distance from the extraction process
(4) The means of conveying material to be extracted from the preparation process to the extraction process
(5) The means of conveying extracted desolventized solids and oil from the extraction process
(6) Preparation and meal finishing processes that are connected by conveyor to the extraction process, regardless of intervening distance

44.2.2 Chapter 44 shall not apply to the following:

(1) The storage of raw materials or finished products
(2) Extraction processes that use liquids that are miscible with water
(3) Extraction processes that use flammable gases, liquefied petroleum gases, or nonflammable gases

44.3 Permits. Permits, where required, shall comply with Section 1.12.

44.4 Special Requirements. The use of processes that employ oxygen-active compounds that are heat or shock sensitive, such as certain organic peroxides, shall be prohibited within the area defined in 44.2.1(2).

Chapter 45 Combustible Fibers

45.1 General.

45.1.1 The storage, use, and handling of combustible fibers shall comply with the requirements of Chapter 45.

45.1.2* Chapter 45 shall not apply to buildings completely protected by an approved automatic fire-extinguishing system; however, this exclusion does not preclude the need for good housekeeping.

45.1.3 Permits. Permits, where required, shall comply with Section 1.12.

45.2 Electrical Wiring.

45.2.1 Electrical wiring and equipment in any combustible fiber storage room or building shall be installed in accordance with the requirements of NFPA 70 for Class 3 hazardous locations.

45.2.2 The AHJ shall be responsible for designating the areas requiring hazardous location electrical classifications and shall classify the area in accordance with the classification system set forth in NFPA 70.

45.3 No Smoking.

45.3.1 No smoking or open flame shall be permitted in any area where combustible fibers are handled or stored, nor within 50 ft (15 m) of any uncovered pile of such fibers.

45.3.2 NO SMOKING signs shall be posted.

45.4 Vehicles and Material Handling Equipment. Trucks or automobiles, other than mechanical handling equipment and approved industrial trucks complying with NFPA 505, *Fire Safety Standard for Powered Industrial Trucks Including Type Designations, Areas of Use, Conversions, Maintenance, and Operations,* shall not enter any fiber storage room or building but shall be permitted to be used at loading platforms.

45.5 Loose Storage of Combustible Fibers.

45.5.1 Loose combustible fibers (not in bales or packages), whether housed or in the open, shall not be stored within 100 ft (30 m) of any building, except as hereinafter specified.

45.5.2 Quantities of loose combustible fibers up to 100 ft^3 (2.8 m^3) shall not be kept in any building unless stored in a metal or metal-lined bin that is equipped with a self-closing cover.

45.5.3 Rooms or Compartments for Quantities of Loose Combustible Fibers Ranging Between 100 ft^3 (2.8 m^3) and 500 ft^3 (14.2 m^3).

45.5.3.1 Quantities exceeding 100 ft^3 (2.8 m^3) of loose combustible fibers, but not exceeding 500 ft^3 (14.2 m^3), shall be permitted to be stored in rooms or compartments in which the floors, walls, and ceilings have a fire-resistance rating of not less than ¾ hour.

45.5.3.2 Each opening into such rooms or compartments from other parts of the building shall be equipped with an approved self-closing fire door.

45.5.4 Storage Vaults for Quantities of Loose Combustible Fibers Ranging Between 500 ft^3 (14.2 m^3) and 1000 ft^3 (28.3 m^3).

45.5.4.1 Quantities exceeding 500 ft^3 (14.2 m^3) of loose combustible fibers, but not exceeding 1000 ft^3 (28.3 m^3), shall be permitted to be stored in storage vaults enclosed with floors, walls, and ceilings that are 2-hour fire-resistance-rated fire barriers.

45.5.4.2 Such storage vaults shall be located outside of buildings or, if located inside, shall be protected with approved safety vents to the outside.

45.5.4.3 If such storage vaults are located inside a building, each opening into the storage vault from other parts of the building shall be protected on each side of the wall by an approved opening protective assembly having a fire resistance rating of 1½ hours.

45.5.4.4 If such storage vaults are located outside of buildings but have openings that expose other buildings (not sufficiently detached to be considered cutoff), each such opening shall be protected on each side of the wall by an approved opening protective assembly having a fire resistance rating of 1½ hours.

45.5.4.5 Roofs of outside vaults shall be of noncombustible material, but shall be permitted to be constructed so as to readily give way in case of an internal explosion.

45.5.5 Storage Vaults for Quantities of Loose Combustible Fibers Exceeding 1000 ft^3 (28.3 m^3).

45.5.5.1 Quantities exceeding 1000 ft^3 (28.3 m^3) of loose combustible fibers shall be permitted to be stored in storage vaults as indicated in 45.5.4.

45.5.5.2 The storage vault shall also be protected by an approved automatic sprinkler system designed and installed in accordance with NFPA 13.

45.5.6 Loose House.

45.5.6.1 Not more than 2500 ft^3 (71 m^3) of loose fibers shall be permitted to be stored in a detached loose house, with openings properly protected against the entrance of sparks.

45.5.6.2 The loose house shall be used for no other purpose.

45.6 Baled Storage.

45.6.1 Blocks or Piles.

45.6.1.1 No single block or pile shall contain more than 25,000 ft^3 (708 m^3) of combustible fibers, exclusive of aisles or clearances.

45.6.1.2 Blocks or piles of baled fiber shall be separated from adjacent storage by aisles not less than 5 ft (1.5 m) wide or by flash fire barriers consisting of continuous sheets of noncombustible material extending from the floor to a height of at least 1 ft (0.3 m) beyond the top of the piles and projecting not less than 1 ft (0.3 m) beyond the sides of the piles.

45.6.1.3 Baled cotton storage and combustibles shall be kept at least 4 ft (1.2 m) from fire door openings.

45.6.2 Sisal and Other Fibers.

45.6.2.1 Sisal and other fibers in bales bound with combustible tie ropes or jute and other fibers that are liable to swell when wet shall be stored in a manner that allows for expansion in any direction without endangering building walls, ceilings, or columns.

45.6.2.2 Not less than 3 ft (0.9 m) of clearance shall be left between walls and sides of piles, except that in storage compartments not more than 30 ft (9 m) in width, 1 ft (0.3 m) clearance at side walls shall be sufficient, provided that a center aisle not less than 5 ft (1.5 m) wide is maintained.

45.7 Storage of Hay, Straw, and Other Similar Agricultural Products.

45.7.1 Hay, straw, and other similar agricultural products shall not be stored adjacent to buildings or combustible material unless a cleared horizontal distance equal to the height of pile is maintained between such storage and combustible material and buildings.

45.7.2 Storage shall be limited to stacks of 100 tons (90,720 kg) each.

45.7.3 Either an approved 1-hour fire wall installed in accordance with NFPA 221, *Standard for Fire Walls and Fire Barrier Walls*, or a clear space of 20 ft (6.1 m) shall be maintained between such stacks.

45.7.4 Unlimited quantities of hay, straw, and other agricultural products shall be permitted to be stored in or near farm buildings located outside of closely built areas.

45.8 Hazardous Materials. Combustible fibers shall not be stored in rooms or buildings with hazardous gases, flammable liquids, dangerous chemicals, or other similar materials.

Chapter 46 Reserved

Chapter 47 Reserved

Chapter 48 Reserved

Chapter 49 Reserved

Chapter 50 Commercial Cooking Equipment

50.1 Application.

50.1.1* The design, installation, operation, inspection, and maintenance of all public and private commercial cooking equipment shall comply with this chapter and NFPA 96, *Standard for Ventilation Control and Fire Protection of Commercial Cooking Operations.*

50.1.2 This chapter shall apply to residential cooking equipment used for commercial cooking operations. [96:1.1.2]

50.1.3 This chapter shall not apply to cooking equipment located in a single dwelling unit. [96:1.1.3]

50.1.4* This chapter shall not apply to facilities where all of the following are met:

(1) Only residential equipment is being used.
(2) Fire extinguishers located in all kitchen areas in accordance with NFPA 10.
(3) Facility is not an assembly occupancy.
(4) Subject to the approval of the authority having jurisdiction. [96:1.1.4]

50.2 General Requirements.

50.2.1 General.

50.2.1.1 Cooking equipment used in processes producing smoke or grease-laden vapors shall be equipped with an exhaust system that complies with all the equipment and performance requirements of this chapter. [**96:**4.1.1]

50.2.1.1.1* Cooking equipment that has been listed in accordance with UL 197, *Standard for Commercial Electric Cooking Appliances,* or an equivalent standard for reduced emissions shall not be required to be provided with an exhaust system. [**96:**4.1.1.1]

50.2.1.1.2 The listing evaluation of cooking equipment covered by 50.2.1.1.1 shall demonstrate that the grease discharge at the exhaust duct of a test hood placed over the appliance shall not exceed 5 mg/m^3 when operated with a total airflow of 500 cfm (0.236 m^3/sec). [**96:**4.1.1.2]

50.2.1.2 All such equipment and its performance shall be maintained in accordance with the requirements of this chapter during all periods of operation of the cooking equipment. [**96:**4.1.2]

50.2.1.3 The following equipment shall be kept in good working condition:

(1) Cooking equipment
(2) Hoods
(3) Ducts (if applicable)
(4) Fans
(5) Fire-extinguishing systems
(6) Special effluent or energy control equipment [**96:**4.1.3]

50.2.1.3.1 Maintenance and repairs shall be performed on all components at intervals necessary to maintain these conditions. [**96:**4.1.3.1]

50.2.1.4 All airflows shall be maintained. [**96:**4.1.4]

50.2.1.5 The responsibility for inspection, maintenance, and cleanliness of the ventilation control and fire protection of the commercial cooking operations shall be the ultimate responsibility of the owner of the system provided that this responsibility has not been transferred in written form to a management company or other party. [**96:**4.1.5]

50.2.1.6* All solid fuel cooking equipment shall comply with the requirements of Chapter 14 of NFPA 96. [**96:**4.1.6]

50.2.1.7 Multi-tenant applications shall require the concerted cooperation of design, installation, operation, and maintenance responsibilities by tenants and by the building owner. [**96:**4.1.7]

50.2.1.8 All interior surfaces of the exhaust system shall be accessible for cleaning and inspection purposes. [**96:**4.1.8]

50.2.1.9* Cooking equipment used in fixed, mobile, or temporary concessions, such as trucks, buses, trailers, pavilions, tents, or any form of roofed enclosure, shall comply with NFPA 96 or this chapter. [**96:**4.1.9]

50.2.2* Clearance.

50.2.2.1 Where enclosures are not required, hoods, grease removal devices, exhaust fans, and ducts shall have a clearance of at least 18 in. (457 mm) to combustible material, 3 in. (76 mm) to limited-combustible material, and 0 in. (0 mm) to noncombustible material. [**96:**4.2.1]

50.2.2.2 Where a hood, duct, or grease removal device is listed for clearances less than those required in 50.2.2.1, the listing requirements shall be permitted. [**96:**4.2.2]

50.2.2.3 Clearance Reduction.

50.2.2.3.1 Where a clearance reduction system consisting of 0.013 in. (0.33 mm) (28-gauge) sheet metal spaced out 1 in. (25 mm) on noncombustible spacers is provided, there shall be a minimum of 9 in. (229 mm) clearance to combustible material. [**96:**4.2.3.1]

50.2.2.3.2 Where a clearance reduction system consisting of 0.027 in. (0.69 mm) (22-gauge) sheet metal on 1 in. (25 mm) mineral wool batts or ceramic fiber blanket reinforced with wire mesh or equivalent spaced out 1 in. (25 mm) on noncombustible spacers is provided, there shall be a minimum of 3 in. (76 mm) clearance to combustible material. [**96:**4.2.3.2]

50.2.2.3.3 Zero clearance to limited-combustible materials shall be permitted where protected by metal lath and plaster, ceramic tile, quarry tile, other noncombustible materials or assembly of noncombustible materials, or materials and products that are listed for the purpose of reducing clearance. [**96:**4.2.3.3]

50.2.3 Drawings. A drawing(s) of the exhaust system installation along with a copy of operating instructions for subassemblies and components used in the exhaust system, including electrical schematics, shall be kept on the premises. [**96:**4.6]

50.2.4 AHJ Notification. If required by the AHJ, notification in writing shall be given of any alteration, replacement, or relocation of any exhaust or extinguishing system or part thereof or cooking equipment. [**96:**4.7]

50.3 Protection of Coverings and Enclosure Materials.

50.3.1 Measures shall be taken to prevent physical damage to any covering or enclosure material. [**96:**7.7.3.1]

50.3.2 Any damage to the covering or enclosure shall be repaired, and the covering or enclosure shall be restored to meet its intended listing and fire-resistive rating and to be acceptable to the AHJ. [**96:**7.7.3.2]

50.3.3 In the event of a fire within a kitchen exhaust system, the duct, the enclosure, or the covering directly applied to the duct shall be inspected by qualified personnel to determine whether the duct, the enclosure, and the covering directly applied to the duct are structurally sound, capable of maintaining their fire protection functions, suitable for continued operation, and acceptable to the AHJ. [**96:**7.7.3.3]

50.3.4 Listed grease ducts shall be installed in accordance with the terms of the listing and the manufacturer's instructions. [**96:**7.7.3.4]

50.4 Fire-Extinguishing Equipment.

50.4.1 Prior to installation of any fire-extinguishing system, construction documents shall be reviewed and approved by the AHJ.

50.4.2 Permits. Permits, where required, shall comply with Section 1.12.

50.4.3 General Requirements.

50.4.3.1 Fire-extinguishing equipment for the protection of grease removal devices, hood exhaust plenums, and exhaust duct systems shall be provided. [96:10.1.1]

50.4.3.2* Cooking equipment that produces grease-laden vapors and that might be a source of ignition of grease in the hood, grease removal device, or duct shall be protected by fire-extinguishing equipment. [96:10.1.2]

50.4.4 Types of Equipment.

50.4.4.1 Fire-extinguishing equipment shall include both automatic fire-extinguishing systems as primary protection and portable fire extinguishers as secondary backup. [96:10.2.1]

50.4.4.2 A placard identifying the use of the extinguisher as secondary backup means to the automatic fire-extinguishing system shall be conspicuously placed near each portable fire extinguisher intended to be used for protection in the cooking area. [96:10.2.2]

50.4.4.2.1 The language and wording for the placard shall be approved by the AHJ. [96:10.2.2.1]

50.4.4.3* Automatic fire-extinguishing systems shall comply with UL 300, *Fire Testing of Fire-Extinguishing Systems for the Protection of Restaurant Cooking*, or other equivalent standards and shall be installed in accordance with the requirements of the listing. [96:10.2.3]

50.4.4.3.1 In existing systems, when changes in the cooking media, positioning, or replacement of cooking equipment occur, the fire-extinguishing system shall be made to comply with 50.4.4.3. [96:10.2.3.1]

50.4.4.4 Grease removal devices, hood exhaust plenums, exhaust ducts, and cooking equipment that are not addressed in UL 300 or other equivalent test standards shall be protected with an automatic fire-extinguishing system(s) in accordance with the applicable NFPA standard(s) and all local building and fire codes and shall be approved by the AHJ. [96:10.2.4]

50.4.4.5 Automatic fire-extinguishing equipment provided as part of listed recirculating systems shall comply with UL 197. [96:10.2.5]

50.4.4.6 Automatic fire-extinguishing systems shall be installed in accordance with the terms of their listing, the manufacturer's instructions, and the following standards where applicable.

(1) NFPA 12
(2) NFPA 13
(3) NFPA 17
(4) NFPA 17A [96:10.2.6]

50.4.4.7 Modifications to Existing Hood Systems.

50.4.4.7.1 Any abandoned pipe or conduit from a previous installation shall be removed from within the hood, plenum, and exhaust duct. [96:10.2.7.1]

50.4.4.7.2 Penetrations and holes resulting from the removal of conduit or piping shall be sealed with listed or equivalent liquidtight sealing devices. [96:10.2.7.2]

50.4.4.7.3 The addition of obstructions to spray patterns from the cooking appliance nozzle(s) such as baffle plates, shelves, or any modification shall not be permitted. [96:10.2.7.3]

50.4.4.7.4 Changes or modifications to the hazard after installation of the fire-extinguishing systems shall result in re-evaluation of the system design by a properly trained and qualified person(s) or company. [96:10.2.7.4]

50.4.4.8 Fixed Baffle Hoods with Water Wash.

50.4.4.8.1 Grease removal devices, hood exhaust plenums, and exhaust ducts requiring protection in accordance with 50.4.3.1 shall be permitted to be protected by a listed fixed baffle hood containing a constant or fire-actuated water-wash system that is listed and in compliance with UL 300 or other equivalent standards and shall be installed in accordance with the requirements of their listing. [96:10.2.8.1]

50.4.4.8.2 Each such area not provided with a listed water-wash extinguishing system shall be provided with a fire-extinguishing system listed for the purpose. [96:10.2.8.2]

50.4.4.8.3 The water for listed fixed baffle hood assemblies shall be permitted to be supplied from the domestic water supply when the minimum water pressure and flow are provided in accordance with the terms of the listing. [96:10.2.8.3]

50.4.4.8.4 The water supply shall be controlled by a supervised water supply control valve. [96:10.2.8.4]

50.4.4.8.5 The water wash in a fixed baffle hood, specifically listed to extinguish a fire, shall be activated by the cooking equipment extinguishing system. [96:10.2.8.5]

50.4.4.8.6 A water-wash system approved to be used for protection of the grease removal device(s), hood exhaust plenum(s), exhaust duct(s), or combination thereof shall include instruction and appropriate electrical interface for simultaneous activation of the water-wash system from an automatic fire-extinguishing system, where the automatic fire-extinguishing system is used for cooking equipment protection only. [96:10.2.8.6]

50.4.4.8.7 Where the fire-extinguishing system provides protection for the cooking equipment, hood, and duct, activation of the water wash shall not be required. [96:10.2.8.7]

50.4.4.9 The water required for listed automatic fire-extinguishing systems shall be permitted to be supplied from the domestic water supply where the minimum water pressure and flow are provided in accordance with the terms of the listing. The water supply shall be controlled by a supervised water supply control valve. [96:10.2.9]

50.4.4.10 Water Valve Supervision. Valves controlling the water supply to listed fixed baffle hood assemblies, automatic fire-extinguishing systems, or both shall be listed indicating type of valve and shall be supervised open by one of the following methods:

(1) Central station, proprietary, or remote station alarm service
(2) Local alarm service that will cause the sounding of an audible signal at a constantly attended point
(3) Locking valves open
(4)*Sealing of valves and approved weekly recorded inspection [96:10.2.10]

50.4.5 Simultaneous Operation.

50.4.5.1 Fixed pipe extinguishing systems in a single hazard area *(see Section 3.3 of NFPA 96 for the definition of Single Hazard Area)* shall be arranged for simultaneous automatic operation upon actuation of any one of the systems. [**96:**10.3.1]

50.4.5.2 Simultaneous operation shall not be required where the fixed pipe extinguishing system is an automatic sprinkler system. [**96:**10.3.2]

50.4.5.3 Simultaneous operation shall not be required where dry or wet chemical system shall be permitted to be used to protect common exhaust ductwork by one of the methods specified in NFPA 17 or NFPA 17A. [**96:**10.3.3]

50.4.6 Fuel Shutoff.

50.4.6.1 Upon activation of any fire-extinguishing system for a cooking operation, all sources of fuel and electric power that produce heat to all equipment requiring protection by that system shall automatically shut off. [**96:**10.4.1]

50.4.6.2 Steam supplied from an external source shall not be required to automatically shut off. [**96:**10.4.2]

50.4.6.3 Any gas appliance not requiring protection, but located under the same ventilating equipment, shall also automatically shut off upon activation of any extinguishing system. [**96:**10.4.3]

50.4.6.4 Shutoff devices shall require manual reset. [**96:**10.4.4]

50.4.7 Manual Activation.

50.4.7.1 A readily accessible means for manual activation shall be located between 42 in. and 48 in. (1067 mm and 1219 mm) above the floor, be accessible in the event of a fire, be located in a path of egress, and clearly identify the hazard protected. [**96:**10.5.1]

50.4.7.2 The automatic and manual means of system activation external to the control head or releasing device shall be separate and independent of each other so that failure of one will not impair the operation of the other. [**96:**10.5.2]

50.4.7.3 The manual means of system activation shall be permitted to be common with the automatic means if the manual activation device is located between the control head or releasing device and the first fusible link. [**96:**10.5.3]

50.4.7.4 An automatic sprinkler system shall not require a manual means of system activation. [**96:**10.5.4]

50.4.7.5 The means for manual activation shall be mechanical or rely on electrical power for activation in accordance with 50.4.7.6. [**96:**10.5.5]

50.4.7.6 Electrical power shall be permitted to be used for manual activation if a standby power supply is provided or if supervision is provided in accordance with 50.4.9. [**96:**10.5.6]

50.4.8 System Annunciation.

50.4.8.1 Upon activation of an automatic fire-extinguishing system, an audible alarm or visual indicator shall be provided to show that the system has activated. [**96:**10.6.1]

50.4.8.2 Where a fire alarm signaling system is serving the occupancy where the extinguishing system is located, the activation of the automatic fire-extinguishing system shall activate the fire alarm signaling system. [**96:**10.6.2]

50.4.9 System Supervision.

50.4.9.1 Where electrical power is required to operate the automatic fire-extinguishing system, it shall be monitored by a supervisory alarm, with a standby power supply provided. [**96:**10.7.1]

50.4.9.2 System supervision shall not be required where an automatic fire-extinguishing system(s) includes automatic mechanical detection and actuation as a backup detection system. [**96:**10.7.2]

50.4.9.3 System supervision shall not be required where a fire-extinguishing system(s) is interconnected or interlocked with the cooking equipment power source(s) so that if the fire-extinguishing system becomes inoperable due to power failure, all sources of fuel or electric power that produce heat to all cooking equipment serviced by that hood shall automatically shut off. [**96:**10.7.3]

50.4.9.4 System supervision shall not be required where an automatic fire-extinguishing system, including automatic mechanical detection and actuation, is electrically connected to a listed fire-actuated water-wash system for simultaneous operation of both systems. [**96:**10.7.4]

50.4.10 Special Design and Application.

50.4.10.1 Hoods containing automatic fire-extinguishing systems are protected areas; therefore, these hoods are not considered obstructions to overhead sprinkler systems and shall not require floor coverage underneath. [**96:**10.8.1]

50.4.10.2 A single listed detection device shall be permitted for more than one appliance when installed in accordance with the terms of the listing. [**96:**10.8.2]

50.4.11 Review and Certification.

50.4.11.1 Where required, complete drawings of the system installation, including the hood(s), exhaust duct(s), and appliances, along with the interface of the fire-extinguishing system detectors, piping, nozzles, fuel shutoff devices, agent storage container(s), and manual actuation device(s), shall be submitted to the AHJ. [**96:**10.9.1]

50.4.11.2* Installation Requirements.

50.4.11.2.1 Installation of systems shall be performed only by persons properly trained and qualified to install the specific system being provided. [**96:**10.9.2.1]

50.4.11.2.2 The installer shall provide certification to the AHJ that the installation is in agreement with the terms of the listing and the manufacturer's instructions and/or approved design. [**96:**10.9.2.2]

50.4.12 Portable Fire Extinguishers.

50.4.12.1* Portable fire extinguishers shall be installed in kitchen cooking areas in accordance with NFPA 10 and shall be specifically listed for such use. [**96:**10.10.1]

50.4.12.2 Extinguishers shall use agents that saponify upon contact with hot grease such as sodium bicarbonate and potassium bicarbonate dry chemical and potassium carbonate solutions. [**96:**10.10.2]

50.4.12.3 Class B gas-type portables shall not be permitted in kitchen cooking areas. [**96:**10.10.3]

50.4.12.4 The manufacturer's recommendations shall be followed. [96:10.10.4]

50.4.12.5 Other fire extinguishers in the kitchen area shall be installed in accordance with NFPA 10. [96:10.10.5]

50.5 Procedures for the Use and Maintenance of Equipment.

50.5.1 Operating Procedures.

50.5.1.1 Exhaust systems shall be operated whenever cooking equipment is turned on. [96:11.1.1]

50.5.1.2 Filter-equipped exhaust systems shall not be operated with filters removed. [96:11.1.2]

50.5.1.3 Openings provided for replacing air exhausted through ventilating equipment shall not be restricted by covers, dampers, or any other means that would reduce the operating efficiency of the exhaust system. [96:11.1.3]

50.5.1.4 Instructions for manually operating the fire-extinguishing system shall be posted conspicuously in the kitchen and shall be reviewed with employees by the management. [96:11.1.4]

50.5.1.5 Listed exhaust hoods shall be operated in accordance with the terms of their listings and the manufacturer's instructions. [96:11.1.5]

50.5.1.6 Cooking equipment shall not be operated while its fire-extinguishing system or exhaust system is nonoperational or otherwise impaired. [96:11.1.6]

50.5.1.7 Secondary filtration and pollution control equipment shall be operated in accordance with the terms of their listing and the manufacturer's recommendations. [96:11.1.7]

50.5.1.8 Inspection and maintenance of equipment allowed in 9.3.1 of NFPA 96 shall be conducted by properly trained and qualified persons at a frequency determined by the manufacturer's instructions or equipment listing. [96:11.1.8]

50.5.2 Inspection of Fire-Extinguishing Systems.

50.5.2.1* Maintenance of the fire-extinguishing systems and listed exhaust hoods containing a constant or fire-activated water system that is listed to extinguish a fire in the grease removal devices, hood exhaust plenums, and exhaust ducts shall be made by properly trained, qualified, and certified person(s) or company acceptable to the AHJ at least every 6 months. [96:11.2.1]

50.5.2.2 All actuation components, including remote manual pull stations, mechanical or electrical devices, detectors, actuators, and fire-actuated dampers, shall be checked for proper operation during the inspection in accordance with the manufacturer's listed procedures. [96:11.2.2]

50.5.2.3 In addition to these requirements, the specific inspection requirements of the applicable NFPA standard shall also be followed. [96:11.2.3]

50.5.2.4* Fusible links (including fusible links on fire damper assemblies) and automatic sprinkler heads shall be replaced at least semiannually or more frequently if necessary where required by the manufacturer. [96:11.2.4]

50.5.2.5 The year of manufacture and the date of installation of the fusible links shall be marked on the system inspection tag. The tag shall be signed or initialed by the installer. [96:11.2.5]

50.5.2.6 Other detection devices not including fusible links and automatic sprinklers shall be serviced or replaced in accordance with the manufacturer's recommendations. [96:11.2.6]

50.5.2.7 Where automatic bulb-type sprinklers or spray nozzles are used and annual examination shows no buildup of grease or other material on the sprinkler or spray nozzles, annual replacement shall not be required. [96:11.2.7]

50.5.2.8 Where required, certificates of inspection and maintenance shall be forwarded to the AHJ. [96:11.2.8]

50.5.3* Inspection for Grease Buildup. The entire exhaust system shall be inspected for grease buildup by a properly trained, qualified, and certified company or person(s) acceptable to the AHJ in accordance with Table 50.5.3. [96:11.3]

Table 50.5.3 Schedule of Inspection for Grease Buildup

Type or Volume of Cooking Frequency	Frequency
Systems serving solid fuel cooking operations	Monthly
Systems serving high-volume cooking operations, such as 24-hour cooking, charbroiling, or wok cooking	Quarterly
Systems serving moderate-volume cooking operations	Semiannually
Systems serving low-volume cooking operations, such as churches, day camps, seasonal businesses, or senior centers	Annually

[96: Table 11.3]

50.5.4 Cleaning of Exhaust Systems.

50.5.4.1 Upon inspection, if found to be contaminated with deposits from grease-laden vapors, the contaminated portions of the exhaust system shall be cleaned by a properly trained, qualified, and certified company or person(s) acceptable to the AHJ. [96:11.4.1]

50.5.4.2* Hoods, grease removal devices, fans, ducts, and other appurtenances shall be cleaned to remove combustible contaminants prior to surfaces becoming heavily contaminated with grease or oily sludge. [96:11.4.2]

50.5.4.3 At the start of the cleaning process, electrical switches that could be activated accidentally shall be locked out. [96:11.4.3]

50.5.4.4 Components of the fire suppression system shall not be rendered inoperable during the cleaning process. [96:11.4.4]

50.5.4.5 Fire-extinguishing systems shall be permitted to be rendered inoperable during the cleaning process where serviced by properly trained and qualified persons. [96:11.4.5]

50.5.4.6 Flammable solvents or other flammable cleaning aids shall not be used. [96:11.4.6]

50.5.4.7 Cleaning chemicals shall not be applied on fusible links or other detection devices of the automatic extinguishing system. [96:11.4.7]

50.5.4.8 After the exhaust system is cleaned, it shall not be coated with powder or other substance. [**96:**11.4.8]

50.5.4.9 When cleaning procedures are completed, all access panels (doors) and cover plates shall be restored to their normal operational condition. [**96:**11.4.9]

50.5.4.10 Dampers and diffusers shall be positioned for proper airflow. [**96:**11.4.10]

50.5.4.11 When cleaning procedures are completed, all electrical switches and system components shall be returned to an operable state. [**96:**11.4.11]

50.5.4.12 When a vent cleaning service is used, a certificate showing date of inspection or cleaning shall be maintained on the premises. [**96:**11.4.12]

50.5.4.13 After cleaning is completed, the vent cleaning contractor shall place or display within the kitchen area a label indicating the date cleaned, the name of the servicing company, and areas not cleaned. [**96:**11.4.13]

50.5.4.14 Where required, certificates of inspection and cleaning shall be submitted to the AHJ. [**96:**11.4.14]

50.5.5 Cooking Equipment Maintenance.

50.5.5.1 An inspection and servicing of the cooking equipment shall be made at least annually by properly trained and qualified persons. [**96:**11.5.1]

50.5.5.2 Cooking equipment that collects grease below the surface, behind the equipment, or in cooking equipment flue gas exhaust, such as griddles or charbroilers, shall be inspected and, if found with grease accumulation, cleaned by a properly trained, qualified, and certified person acceptable to the AHJ. [**96:**11.5.2]

50.6 Minimum Safety Requirements for Cooking Equipment.

50.6.1 Cooking Equipment.

50.6.1.1 Cooking equipment shall be approved based on one of the following criteria:

(1) Listings by a testing laboratory
(2) Test data acceptable to the AHJ [**96:**12.1.1]

50.6.1.2 Installation.

50.6.1.2.1 All listed appliances shall be installed in accordance with the terms of their listings and the manufacturer's instructions. [**96:**12.1.2.1]

50.6.1.2.2* Cooking appliances requiring protection shall not be moved, modified, or rearranged without prior re-evaluation of the fire-extinguishing system by the system installer or servicing agent, unless otherwise allowed by the design of the fire-extinguishing system. [**96:**12.1.2.2]

50.6.1.2.3 The fire-extinguishing system shall not require re-evaluation where the cooking appliances are moved to perform maintenance and cleaning provided the appliances are returned to approved design location prior to cooking operations, and any disconnected fire-extinguishing system nozzles attached to the appliances are reconnected in accordance with the manufacturer's listed design manual. [**96:**12.1.2.3]

50.6.1.2.3.1 An approved method shall be provided that will ensure that the appliance is returned to an approved design location. [**96:**12.1.2.3.1]

50.6.1.2.4 All deep fat fryers shall be installed with at least a 16 in. (406 mm) space between the fryer and surface flames from adjacent cooking equipment. [**96:**12.1.2.4]

50.6.1.2.5 Where a steel or tempered glass baffle plate is installed at a minimum 8 in. (203 mm) in height between the fryer and surface flames of the adjacent appliance, the requirement for a 16 in. (406 mm) space shall not apply. [**96:**12.1.2.5]

50.6.1.2.5.1 If the fryer and the surface flames are at different horizontal planes, the minimum height of 8 in. (203 mm) shall be measured from the higher of the two. [**96:**12.1.2.5.1]

50.6.2 Operating Controls. Deep fat fryers shall be equipped with a separate high-limit control in addition to the adjustable operating control (thermostat) to shut off fuel or energy when the fat temperature reaches 475°F (246°C) at 1 in. (25.4 mm) below the surface. [**96:**12.2]

Chapter 51 Industrial Ovens and Furnaces

51.1 General.

51.1.1 Application. Industrial ovens and furnaces shall comply with this chapter and the applicable provisions of NFPA 86, *Standard for Ovens and Furnaces.*

51.1.2 Permits.

51.1.2.1 Permits, where required, shall comply with Section 1.12.

51.1.2.2 Applications for a permit shall be accompanied by plans for safe operation showing all essential details and calculations.

51.2 Location. Special consideration shall be given to the location of equipment using flammable liquids or when using gas fuels with a vapor density greater than air.

51.3 Safety Controls. Safety controls, as specified in NFPA 86, NFPA 86C, and NFPA 86D, shall be sufficient in number and substantially constructed and arranged to maintain the required conditions of safety and prevent the development of fire and explosion hazards.

Chapter 52 Stationary Lead–Acid Battery Systems

52.1 General. Stationary lead-acid battery systems having an electrolyte capacity of more than 100 gal (378.5 L) in sprinklered buildings or 50 gal (189.3 L) in unsprinklered buildings used for facility standby power, emergency power, or uninterrupted power supplies shall be in accordance with Chapter 52.

52.2 Permits.

52.2.1 Permits, where required, shall comply with Section 1.12.

52.2.2 Prior to installation, plans shall be submitted and approved by the AHJ.

52.3 Safety Features.

52.3.1 Safety Venting. Batteries shall be provided with safety venting caps.

52.3.2 Thermal Runaway. Valve-regulated lead–acid (VRLA) battery systems shall be provided with a listed device or other approved method to preclude, detect, and control thermal runaway.

52.3.3 Location and Occupancy Separation.

52.3.3.1 Battery systems shall be permitted in the same room as the equipment that they support.

52.3.3.2 Battery systems shall be housed in a noncombustible, locked cabinet or other enclosure to prevent access by unauthorized personnel unless located in a separate equipment room accessible only to authorized personnel.

52.3.3.3 In other than assembly, educational, detention and correction facilities, health care, ambulatory health care, day care centers, residential board and care, and residential occupancies, battery systems shall be located in a room separated from other portions of the building by a minimum of a 1-hour fire barrier.

52.3.3.4 In assembly, educational, detention and correction facilities, health care, ambulatory health care, day care centers, residential board and care, and residential occupancies, battery systems shall be located in a room separated from other portions of the building by a minimum of a 2-hour fire barrier.

52.3.4 Spill Control.

52.3.4.1 Rooms, buildings, or areas containing free-flowing liquid electrolyte in individual vessels having a capacity of more than 55 gal (208 L) or multiple vessels having an aggregate capacity exceeding 1000 gal (3785 L) shall be provided with spill control to prevent the flow of liquids to adjoining areas.

52.3.4.2* An approved method and materials for the control of a spill of electrolyte shall be provided. The method shall be capable of controlling a spill from the single largest vessel.

52.3.5 Neutralization.

52.3.5.1 An approved method to neutralize spilled electrolyte shall be provided.

52.3.5.2 The method shall be capable of neutralizing a spill from the largest lead–acid battery to a pH between 7.0 and 9.0.

52.3.6 Ventilation. Ventilation shall be provided for rooms and cabinets in accordance with the mechanical code and one of the following:

(1) The ventilation system shall be designed to limit the maximum concentration of hydrogen to 1.0 percent of the total volume of the room during the worst-case event of simultaneous "boost" charging of all the batteries, in accordance with nationally recognized standards.
(2) Continuous ventilation shall be provided at a rate of not less than 1 $ft^3/min/ft^2$ (5.1 $L/sec/m^2$) of floor area of the room or cabinet.

52.3.7 Environment. The battery environment shall be controlled or analyzed to maintain temperature in a safe operating range for the specific battery technology used.

52.3.8 Signs.

52.3.8.1 Doors or accesses into rooms, buildings, or areas containing stationary lead–acid battery systems shall be provided with approved signs.

52.3.8.2 The signs shall state that the room contains lead–acid battery systems, that the battery room contains energized electrical circuits, and that the battery electrolyte solutions are corrosive liquids.

52.3.8.3 Battery cabinets shall be provided with exterior labels that identify the manufacturer and model number of the system and electrical rating (voltage and current) of the contained battery system. Within the cabinet, signs shall be provided to indicate the relevant electrical, chemical, and fire hazard.

52.3.9 Seismic Protection. In seismically active areas, battery systems shall be seismically braced in accordance with the building code.

52.3.10 Smoke Detection. An approved automatic smoke detection system shall be installed in such areas and supervised by an approved central, proprietary, or remote station service or a local alarm that will give an audible signal at a constantly attended location.

Chapter 53 Mechanical Refrigeration

53.1* General.

53.1.1 Refrigeration unit and system installations having a refrigerant circuit containing more than 220 lb (100 kg) of Group A1 or 30 lb (13.6 kg) of any other group refrigerant shall be in accordance with this chapter and the mechanical code.

53.1.2 The AHJ shall be authorized to exempt temporary or portable installations.

53.2 Classification. Refrigerants shall be classified into safety groups in accordance with the mechanical code.

53.3 Definitions. Definitions and classifications of refrigerant groups shall be defined according to the mechanical code. *(For general definitions, see Chapter 3.)*

53.4 Permits and Plans.

53.4.1 Permits. Permits, where required, shall comply with Section 1.12.

53.4.2 Plans and specifications for devices and systems required by this chapter shall be submitted to the AHJ for review and approval prior to installation.

53.5 Installation and Maintenance.

53.5.1 Refrigeration systems shall be installed and maintained in a safe manner that will minimize the life, health, and fire hazards of the installation.

53.5.2 Installation shall be in accordance with the mechanical code.

53.5.3 Refrigeration systems shall be maintained in a safe and operable condition, free from accumulations of oil, dirt, waste, excessive corrosion, other debris, or leaks.

53.6 Access. Refrigeration systems shall be accessible to the fire department as required by the AHJ.

53.7 Emergency Pressure Control System. Refrigeration systems containing more than 6.6 lb (3 kg) of flammable, toxic, or highly toxic refrigerant or ammonia shall be provided with an emergency pressure control system in accordance with 53.7.1 and 53.7.2.

53.7.1 Automatic Crossover Valves. Each high and intermediate pressure zone in a refrigeration system shall be provided with a single automatic valve providing a crossover connection to a lower pressure zone. Automatic crossover valves shall comply with 53.7.1.1 through 53.7.1.3.

53.7.1.1 Overpressure Limit Set Point. Automatic crossover valves shall be arranged to automatically relieve excess system pressure to a lower pressure zone if the pressure in a high or intermediate pressure zone rises to within 15 psi (103.3 kPa) of the set point for emergency pressure relief devices.

53.7.1.2 Manual Operation. Where required by the code official, automatic crossover valves shall be capable of manual operation.

53.7.1.3 System Design Pressure. Refrigeration system zones that are connected to a higher pressure zone by an automatic crossover valve shall be designed to safely contain the maximum pressure that can be achieved by interconnection of the two zones.

53.7.2 Automatic Emergency Stop.

53.7.2.1 Operation of an Automatic Crossover Valve. Operation of an automatic crossover valve shall cause all compressors on the affected system to immediately stop.

53.7.2.1.1 Dedicated pressure-sensing devices located immediately adjacent to crossover valves shall be permitted as a means for determining operation of a valve.

53.7.2.1.2 To ensure that the automatic crossover valve system provides a redundant means of stopping compressors in an overpressure condition, high-pressure cutout sensors associated with compressors shall not be used as a basis for determining operation of a crossover valve.

53.7.2.2 Overpressure in Low Pressure Zone.

53.7.2.2.1 The lowest pressure zone in a refrigeration system shall be provided with a dedicated means of determining a rise in system pressure to within 15 psi (103.3 kPa) of the set point for emergency pressure-relief devices.

53.7.2.2.2 Activation of the overpressure sensing device shall cause all compressors on the affected system to immediately stop.

53.8 Treatment and Flaring Systems for Refrigerant Discharge.

53.8.1 Applicability. Refrigeration systems that are designed to discharge refrigerant vapor to the atmosphere shall be provided with an approved treatment or flaring system where required by Section 53.8.

Exception: Where the AHJ determines, upon review of an engineering analysis prepared at the expense of the owner, that a significant fire, health, or environmental hazard would not result from an atmospheric release.

53.8.2 Toxic and Highly Toxic Refrigerants.

53.8.2.1 Systems containing toxic or highly toxic refrigerants shall discharge vapor to the atmosphere only through an approved treatment or flaring system.

53.8.2.2 Treatment systems shall be in accordance with 68.3.6.

53.8.2.3 Flaring systems shall be in accordance with 53.8.5.

53.8.3 Flammable Refrigerants.

53.8.3.1 Systems containing flammable refrigerants having a density equal to or greater than the density of air shall discharge vapor to the atmosphere only through an approved treatment or flaring system.

53.8.3.2 Systems containing flammable refrigerants having a density less than the density of air shall be allowed to discharge vapor to the atmosphere, provided that the point of discharge is located outside of the structure at not less than 15 ft (4.6 m) above the adjoining grade level and not less than 20 ft (6.1 m) from any window, ventilation opening, or exit.

53.8.3.3 Flaring systems shall be in accordance with 53.8.5.

53.8.4 Ammonia Refrigerant.

53.8.4.1 Systems containing ammonia refrigerant shall discharge vapor to the atmosphere through a treatment system in accordance with 68.3.6, through a flaring system in accordance with 53.8.5, through an approved ammonia diffusion system in accordance with Section 53.9, or by other approved means.

53.8.4.2 Discharge through a treatment, flaring, or diffusion system shall not be required for ammonia–water absorption unit systems installed outdoors serving a dwelling unit, provided that the discharge is shielded and dispersed.

53.8.4.3 Discharge through a treatment, flaring, or diffusion system shall not be required for ammonia–water absorption unit systems containing less than 22 lb (10 kg) of ammonia and for which the ammonia circuit is located entirely outdoors.

53.8.5 Flaring System Design Requirements.

53.8.5.1 Flaring systems for incineration of flammable, toxic, or highly toxic refrigerants or ammonia shall be designed to incinerate the entire discharge.

53.8.5.2 The products of refrigerant incineration shall not pose health or environmental hazards.

53.8.5.3 Incineration shall be automatic upon initiation of discharge, shall be designed to prevent blowback, and shall not expose structures or materials to threat of fire.

53.8.5.4 Standby fuel, such as LP-Gas, and standby power shall have the capacity to operate for one and one half the required time for complete incineration of refrigerant in the system.

53.9 Ammonia Diffusion Systems.

53.9.1 Ammonia diffusion systems shall include a tank containing 1 gal of water for each pound of ammonia (4 L of water for each kg of ammonia) that will be released in 1 hour from the largest relief device connected to the discharge pipe.

53.9.2 The water used shall be prevented from freezing without the use of salt or chemicals by burial of the discharge pipe below frost depth or other approved means.

53.9.3 The discharge pipe from the pressure relief device shall distribute ammonia in the bottom of the tank, but no lower than 33 ft (10 m) below the maximum liquid level.

53.9.4 The tank shall contain the volume of water and ammonia, described in 53.9.1, without overflowing.

53.9.5 The tank shall be substantially constructed of not less than ⅛ in. (2.51 mm) (10 gauge) steel.

53.9.6 The horizontal dimensions of the tank shall be equal to or less than one half of the height.

53.9.7 The tank shall have a hinged cover or, if of the enclosed type, shall have a vent hole at the top.

53.9.8 Pipe connections shall be through the top of the tank.

53.10 Refrigeration Machinery Rooms.

53.10.1 Refrigeration systems shall be provided with a refrigeration machinery room where required by the mechanical code.

53.10.2 Refrigerant Vapor Detection and Alarm Systems.

53.10.2.1 Each refrigeration machinery room shall have an approved refrigerant vapor detection and alarm system in accordance with Section 53.11 and the mechanical code.

53.10.2.2 Refrigerant vapor detection and alarm systems shall not be required for ammonia systems where the refrigeration machinery room complies with the mechanical code.

53.10.3 Special Requirements.

53.10.3.1 Open flames or devices having an exposed surface temperature exceeding 800°F (427°C) shall be prohibited in refrigeration machinery rooms.

53.10.3.2 Momentary temperature excursions such as electrical contacts in Group A1 and B1 systems shall be permitted.

53.10.3.3 Open flames or devices having an exposed surface temperature exceeding 800°F (427°C) shall be permitted in refrigeration machinery rooms used exclusively for direct-fired absorption equipment.

53.10.3.4 Existing nonconforming installations shall be permitted where approved by the AHJ, where the combustion system is interlocked with the refrigerant detection system to shut off at the permissible exposure limit (PEL) and the risks to the equipment life arising from dissociation products are acknowledged in writing by the owner.

53.10.4 Emergency Control of Ventilation Systems.

53.10.4.1 Fans providing emergency purge ventilation for refrigerant escape from a refrigeration room shall have a clearly identified switch of the break-glass type providing on-only control immediately adjacent to, and outside of, each refrigerant machinery room means of egress.

53.10.4.2 Purge fans shall also respond automatically to the refrigerant concentration detection system set to activate the ventilation system at the threshold levels set forth in Section 53.11.

53.10.4.3 An emergency purge control shall be provided with a manual reset only.

53.10.5 Central Control of Ventilation Systems.

53.10.5.1 Mechanical ventilation systems serving refrigeration rooms shall have switches to control the power to each fan.

53.10.5.2 The switches shall be key-operated or within a locked glass-covered enclosure at an approved location adjacent to and outside of the principal entrance to the refrigeration machinery room.

53.10.5.3 Keys necessary for operation of ventilation systems shall be located in a single approved location.

53.10.5.4 Switches controlling fans providing continuous ventilation shall be of the two-position, on/off type.

53.10.5.5 Switches controlling fans providing intermittent or emergency ventilation shall be of the three-position, automatic on/off type.

53.10.5.6 Switches shall be labeled identifying both the function and the specific fan being controlled.

53.10.5.7 Two colored and labeled indicator lamps responding to the differential pressure created by airflow shall be provided for each switch.

53.10.5.8 One lamp shall indicate flow, and the other shall indicate no flow.

53.10.6 Ventilation Discharge.

53.10.6.1 Exhaust from mechanical ventilation systems in refrigeration rooms shall be discharged 20 ft (6.1 m) or more from a property line, or openings into buildings.

53.10.6.2 Discharges capable of exceeding 25 percent of the lower flammable limit (LFL) or 50 percent of the immediately dangerous to life and health (IDLH) value shall be equipped with approved treatment systems to reduce the discharge concentrations to these values or lower. *(Also see Section 53.8.)*

53.10.7 Electrical.

53.10.7.1 Electrical equipment and electrical installations in refrigeration machinery rooms shall comply with Section 11.1 and Section 53.12.

53.10.7.1.1 Refrigeration machinery rooms used exclusively for direct-fired absorption equipment shall be permitted not to be classified as a hazardous location for electrical equipment in accordance with NFPA 70.

53.10.7.1.2 Direct-vented combustion equipment shall be permitted in accordance with the mechanical code.

53.10.7.2 The refrigeration machinery room shall not be required to be classified as a hazardous location for electrical equipment except as provided in the mechanical code or NFPA 70.

53.10.8 Storage.

53.10.8.1 Storage of materials in a refrigeration machinery room, including reserve supplies of refrigerants or refrigerant oils, shall be in accordance with other applicable chapters of this *Code.*

53.10.8.2 Flammable and combustible materials shall not be stored in refrigeration machinery rooms except for incidental materials necessary for the safe and proper operation and maintenance of the system.

53.10.9 Emergency Control.

53.10.9.1 A clearly identified switch of the break-glass type providing off-only control of electrically energized equipment and devices within the refrigeration machinery room shall be provided immediately adjacent to, and outside of, each refrigeration machinery room means of egress.

53.10.9.2 Emergency shutoff shall also be automatically activated when the concentration of refrigerant vapor exceeds 25 percent of the lower flammable limit (LFL).

53.11 Refrigerant Vapor Detection and Alarm Systems.

53.11.1 Applicability. Refrigerant vapor detection and alarm systems required by Section 53.11 shall be in accordance with Section 53.11.

53.11.2 Audible and Visual Alarm Signaling Devices.

53.11.2.1 The refrigerant vapor detector shall activate approved visual and audible alarm signaling devices at one of the following refrigerant thresholds:

(1) At a value not greater than the corresponding TLV-TWA (or toxicity measure consistent therewith); not to exceed 25 percent of the LFL
(2) For ammonia, at a concentration not exceeding 1000 parts per million

53.11.2.2 Audible and visual alarm signaling devices shall be located inside the refrigeration machinery room and outside the room at each entrance into the room.

53.11.2.3 Audible alarm signaling devices shall provide a sound level of at least 15 dB above the operating ambient noise sound pressure level of the space in which they are installed and shall provide approved, distinctive audible and visual alarms.

53.11.3 Power and Supervision. Refrigerant vapor detection and alarm systems shall be powered and supervised as required for fire alarm systems in accordance with *NFPA 72.*

53.11.4 Monitoring and Annunciation. Refrigerant vapor detection and alarm systems shall be remotely annunciated at an approved constantly attended location as required for fire alarm systems in accordance with *NFPA 72.*

53.11.5 Installation and Maintenance. Detection and alarm systems shall be installed and maintained in accordance with the equipment manufacturers' specifications. *(Also see 53.15.1.)*

53.12 Electrical.

53.12.1 General. Electrically energized components of refrigeration systems shall conform to Section 11.1 and 53.10.6.

53.12.2 Secondary Source. Where treatment, detection, or alarm systems are required, such systems shall be connected to a secondary source of power to automatically supply electrical power in the event of loss of power from the primary source.

53.13 Instructions. The person in charge of the premises on which a refrigeration unit or system is installed shall provide the following information in the emergency control box:

(1) Instructions for suspending operation of the system in the event of an emergency
(2) The name, address, and emergency telephone numbers to obtain emergency service
(3) The name, address, and telephone number of the fire department with instructions to notify the fire department in the event of an emergency
(4) The location and operation of emergency discharge systems required in Chapter 53

53.14 Signs and Labels.

53.14.1 General. Refrigeration units or systems shall be provided with approved hazard identification signs in accordance with NFPA 704, *Standard System for the Identification of the Hazards of Materials for Emergency Response*; emergency operational signs, charts, and labels in accordance with the mechanical code, and the following:

(1) Name and address of the manufacturer or installer
(2) Type and total number of pounds of refrigerant contained in the system
(3) Field test pressure applied

53.14.2 Systems with More than 110 lb (50 kg) of Refrigerant. Systems containing more than 110 lb (50 kg) of refrigerant shall be provided with signs having letters not less than ½ in. (12.7 mm) high, designating the following:

(1) Main shutoff valves to each vessel
(2) Mainstream or electrical controls
(3) Remote control switch
(4) Pressure-limiting device

53.15 Testing of Equipment.

53.15.1 Acceptance Testing. The following emergency devices or systems shall be tested to demonstrate their safety and effectiveness upon completion of the installation or alteration:

(1) Treatment and flaring systems
(2) Ammonia diffusion systems
(3) Valves and appurtenances necessary to the operation of emergency refrigeration control boxes
(4) Fans and associated equipment intended to operate emergency purge ventilation systems
(5) Refrigerant vapor detection and alarm systems

53.15.2 Periodic Testing. The following emergency devices or systems shall be tested in accordance with the manufacturers' specifications and as required by the AHJ:

(1) Treatment and flaring systems
(2) Valves and appurtenances necessary to the operation of emergency refrigeration control boxes
(3) Fans and associated equipment intended to operate emergency purge ventilation systems
(4) Refrigerant vapor detection and alarm systems *(see Section 53.4 and Section 53.1)*

53.15.3 Records of Required Testing. A written record of required testing shall be maintained on the premises.

53.15.4 Frequency of Required Testing. Unless otherwise required by the AHJ, testing frequency shall be in accordance with 53.15.2.

53.15.5 Testing Personnel Qualifications. Tests of emergency devices or systems required by Chapter 53 shall be conducted by persons trained in such testing.

53.16 Notification of Refrigerant Discharges.

53.16.1 Where required by the fire department, the fire department shall be notified upon discharge of refrigerant, whether automatic or manual.

Exception No. 1: Refrigeration systems operating at pressures below atmospheric and incorporating automatic purge cycles.

Exception No. 2: Incidental operation of automatic pressure-relief valves resulting in minor release of the refrigerant charge.

Exception No. 3: Incidental minor releases associated with service operations after system pumpdown has been accomplished.

53.16.2* Refrigerant shall not be discharged except in an emergency.

Exception No. 1: Refrigeration systems operating at pressures below atmospheric and incorporating automatic purge cycles.

Exception No. 2: Incidental operation of automatic pressure-relief valves resulting in minor release of the refrigerant charge.

Exception No. 3: Incidental minor releases associated with service operations after system pumpdown has been accomplished.

53.17 Changing of Refrigerant Type. Refrigerant types shall not be changed without prior notification and approval of the AHJ.

53.18 Records of Refrigerant Quantities.

53.18.1 The person in charge of the premises on which a refrigeration unit or system subject to these regulations is installed or maintained shall keep a written record of refrigerant quantities brought onto and removed from the premises.

53.18.2 Records shall be available to the AHJ.

53.19 Storage. Storage of materials in a refrigeration machinery room shall be in accordance with other applicable chapters of this *Code.*

Chapter 54 Reserved

Chapter 55 Reserved

Chapter 56 Reserved

Chapter 57 Reserved

Chapter 58 Reserved

Chapter 59 Reserved

Chapter 60 Hazardous Materials

60.1 General Requirements.

60.1.1* Applicability.

60.1.1.1 Occupancies containing high hazard contents shall comply with this chapter in addition to other applicable requirements of this *Code.* [***5000***:34.1.1.1]

60.1.1.2 Buildings, and portions thereof, containing high hazard contents limited to the following shall not be required to comply with this chapter:

(1) Flammable and combustible liquids associated with application of flammable finishes and complying with Chapter 43.
(2) Flammable and combustible liquids associated with wholesale and retail sales and storage in mercantile occupancies and complying with Chapter 66
(3) Class IIIA and Class IIIB combustible liquid solvents in closed systems employing listed cleaning equipment complying with Chapter 24
(4) Refrigerants and refrigerant oil contained within closed-cycle refrigeration systems complying with Chapter 53 and the building code
(5) Flammable and combustible liquid beverages in liquor stores and distributors without bulk storage
(6) High hazard contents stored or used in farm buildings or similar occupancies for on-premise agricultural use
(7) Corrosive materials in stationary batteries utilized for facility emergency power, uninterrupted power supply, or similar purposes, provided that the batteries are provided with safety venting caps and ventilation is provided in accordance with Chapter 52
(8) Corrosive materials displayed in original packaging in mercantile occupancies and intended for personal or household use or as building materials
(9) Aerosol products in storage or mercantile occupancies and complying with Chapter 61
(10) Flammable and combustible liquids storage tank buildings meeting the requirements of 2.3.4 of NFPA 30
(11) Flammable and combustible liquids storage tank vaults meeting the requirements of 2.2.7 of NFPA 30
(12) Flammable and combustible liquids process buildings meeting the requirements of Section 5.3 of NFPA 30
(13) Installation of fuel gas distribution systems and associated equipment in accordance with Section 11.4 and Chapter 69 as referenced in the building code
(14) Consumer fireworks, 1.4G in mercantile occupancies complying with Section 65.11 [***5000***:34.1.1.2]

60.1.2 Material Classification.

60.1.2.1 General. Hazardous materials shall be classified in accordance with the building code and the definitions in Chapter 3. [***5000***:34.1.2.1]

60.1.2.1.1 Mixtures. Mixtures shall be classified in accordance with the hazards of the mixture as a whole by an approved, qualified organization, individual, or testing laboratory.

60.1.2.2 Multiple Hazards. Buildings, and portions thereof, containing high hazard contents that are classified in more than one hazard level, as set forth in the building code, shall conform to the code requirements for each of the applicable protection levels specified in Section 60.3. [***5000***:34.1.2.2]

60.1.2.3 Permits.

60.1.2.3.1 General.

60.1.2.3.1.1* Permits shall be required to store, dispense, use, or handle hazardous material in excess of allowable quantities specified in Section 1.12.

60.1.2.3.1.2 A permit shall be required where a material is classified as having more than one hazard category if the quantity limits are exceeded in any category.

60.1.2.3.1.3 Permits shall be required to install, repair damage to, abandon, remove, place temporarily out of service, close, or substantially modify a storage facility or other area regulated by Chapter 60, except that permits shall not be required for the following:

(1) Routine maintenance
(2) Repair work performed on an emergency basis

60.1.2.3.2 Facility Closure Approval. The permittee shall apply for a permit to close storage, use, or handling facilities at least 30 days prior to the termination of the storage, use, or handling of hazardous materials, except that the AHJ shall be permitted to reduce the 30-day period when there are special circumstances requiring such reduction. Facility closure shall be in accordance with 60.1.2.4 through 60.1.2.4.3.3.

60.1.2.4 Facility Closure.

60.1.2.4.1 Temporarily Out-of-Service Facilities. Facilities that are temporarily out of service shall continue to maintain a permit and be monitored and inspected.

60.1.2.4.2 Permanently Out-of-Service Facilities. Facilities for which a permit is not kept current or that are not monitored and inspected on a regular basis shall be deemed to be permanently out of service and shall be closed in accordance with 60.1.2.4.3 through 60.1.2.4.3.3.

60.1.2.4.3 Closure Plan.

60.1.2.4.3.1 The permit holder or applicant shall submit a plan to the fire department to terminate storage, dispensing, handling, or use of hazardous materials at least 30 days prior to facility closure.

60.1.2.4.3.2 The plan shall demonstrate that hazardous materials that were stored, dispensed, handled, or used in the facility have been transported, disposed of, or reused in a manner that eliminates the need for further maintenance and any threat to public health and safety.

60.1.2.4.3.3 The plan shall be submitted with a permit application for facility closure in accordance with 60.1.2.3.2.

60.1.2.5 Management Plan and Hazardous Materials Documentation.

60.1.2.5.1 Hazardous Materials Management Plan. Where required by the AHJ, permit applications shall include a hazardous materials management plan (HMMP).

60.1.2.5.1.1* Contents. The HMMP shall include an emergency response training plan and a facility site plan designating the following:

(1) Storage and use areas
(2) Maximum amount of each material stored or used in each area
(3) Range of container sizes
(4) Product-conveying piping containing liquids or gases, other than utility-owned fuel gas lines and low-pressure fuel gas lines
(5) Locations of emergency isolation and mitigation valves and devices
(6) On and off positions of valves for valves that are of the self-indicating type
(7) Storage plan that is legible and drawn approximately to scale showing the intended storage arrangement, including the location and dimensions of aisles, with separate distribution systems permitted to be shown on separate pages

60.1.2.5.1.2 Location. The location of the HMMP shall be posted adjacent to permits when an HMMP is provided.

60.1.2.5.2* Hazardous Materials Inventory Statement. Where required by the AHJ, permit applications shall include a hazardous materials inventory statement (HMIS).

60.1.2.5.3 Material Safety Data Sheets. Material safety data sheets (MSDS) shall be readily available on the premises for hazardous materials regulated by Chapter 60.

60.1.2.6 Release of Hazardous Materials.

60.1.2.6.1 Prohibited Releases. Hazardous materials shall not be released into a sewer, storm drain, ditch, drainage canal, lake, river, or tidal waterway; upon the ground, sidewalk, street, or highway; or into the atmosphere unless such release is permitted by the following:

(1) Federal, state, or local governing regulations
(2) Permits of the jurisdictional air quality management board
(3) National Pollutant Discharge Elimination System Permit
(4) Waste discharge requirements established by the jurisdictional water quality control board
(5) Local sewer pretreatment requirements for publicly owned treatment works

60.1.2.6.2 Control and Mitigation of Unauthorized Discharges. Provisions shall be made for controlling and mitigating unauthorized discharges.

60.1.2.6.3 Records of Unauthorized Discharges. Accurate records of the unauthorized discharge of hazardous materials shall be kept by the permittee.

60.1.2.6.4 Notification of Unauthorized Discharges. The fire department shall be notified immediately or in accordance with approved emergency procedures when an unauthorized discharge becomes reportable under state, federal, or local regulations.

60.1.2.6.5 Container Failure. When an unauthorized discharge due to primary container failure is discovered, the involved primary container shall be repaired or removed from service.

60.1.2.6.6 Responsibility for Cleanup of Unauthorized Discharges.

60.1.2.6.6.1 The person, firm, or corporation responsible for an unauthorized discharge shall institute and complete all actions necessary to remedy the effects of such unauthorized discharge, whether sudden or gradual, at no cost to the AHJ.

60.1.2.6.6.2 When deemed necessary by the AHJ, cleanup of an unauthorized discharge shall be permitted to be initiated by the fire department or by an authorized individual or firm, and costs associated with such cleanup shall be borne by the owner, operator, or other person responsible for the unauthorized discharge.

60.1.2.7 Personnel Training. Persons responsible for the operation of areas in which hazardous materials are stored, dispensed, handled, or used shall be familiar with the chemical nature of the materials and the appropriate mitigating actions necessary in the event of fire, leak, or spill.

60.1.2.8 Fire Department Liaison.

60.1.2.8.1 Responsible persons shall be designated and trained to be liaison personnel for the fire department.

60.1.2.8.2 Liaison personnel shall aid the fire department in pre-planning emergency responses and identification of the locations where hazardous materials are located and shall have access to material safety data sheets and be knowledgeable in the site emergency response procedures.

60.1.2.9 Ignition Source Controls.

60.1.2.9.1 Smoking. Smoking shall be prohibited in the following locations:

(1) Within 25 ft (7.6 m) of outdoor storage or dispensing areas
(2) In rooms or areas where hazardous materials are stored or dispensed or used in open systems in amounts requiring a permit in accordance with 60.1.2.3 through 60.1.2.3.2.

60.1.2.9.2 Open Flames and High-Temperature Devices. Open flames and high-temperature devices shall not be used in a manner that creates a hazardous condition.

60.1.2.9.3 Energy-Consuming Equipment. Energy-consuming equipment shall be listed for use with the hazardous materials stored or used.

60.1.2.10 Systems, Equipment, and Processes. Processes, methods, specifications, equipment testing and maintenance, design standards, performance, installation, vessel design and construction, and other pertinent criteria shall be in accordance with Section 1.4.

60.1.2.11 Signs.

60.1.2.11.1 General.

60.1.2.11.1.1 Design and Construction. Signs shall be durable, and the size, color, and lettering of signs shall be in accordance with nationally recognized standards.

60.1.2.11.1.2 Language. Signs shall be in English as the primary language or in symbols allowed by this *Code*.

60.1.2.11.1.3 Maintenance. Signs shall not be obscured or removed.

60.1.2.11.2 Hazard Identification Signs.

60.1.2.11.2.1 General. Visible hazard identification signs in accordance with NFPA 704 shall be placed on the following, except where the AHJ has received a hazardous materials management plan and a hazardous materials inventory statement in accordance with 60.1.2.5.1 through 60.1.2.5.2 and has determined that omission of such signs is consistent with safety:

(1) Stationary aboveground tanks
(2) Stationary aboveground containers
(3) At entrances to locations where hazardous materials are stored, dispensed, used, or handled in quantities requiring a permit
(4) At other entrances and locations designated by the AHJ

60.1.2.11.2.2 Identification of Containers, Cartons, and Packages. Individual containers, cartons, or packages shall be conspicuously marked or labeled in accordance with nationally recognized standards.

60.1.2.11.2.3 Identification of Gas Rooms and Cabinets. Rooms or cabinets containing compressed gases shall be conspicuously labeled as follows: COMPRESSED GAS.

60.1.2.11.3 No Smoking Signs. Signs prohibiting smoking shall be provided for an entire site, building, or in the following locations:

(1) In rooms or areas where hazardous materials are stored or dispensed or used in open systems in amounts requiring a permit in accordance with 60.1.2.3 through 60.1.2.3.2
(2) Within 25 ft (7.6 m) of outdoor storage, dispensing, or open-use areas
(3) In areas containing flammable gases

60.1.2.12 Security. The storage, dispensing, use, and handling areas shall be secured against unauthorized entry and safeguarded with such protective facilities as public safety requires.

60.1.2.13 Protection from Vehicles.

60.1.2.13.1 Guard posts or other approved means shall be provided to protect the following areas where subject to vehicular damage:

(1) Storage tanks and connected piping, valves, and fittings
(2) Dispensing areas
(3) Use areas

60.1.2.13.2 Where guard posts are installed, the posts shall meet the following criteria:

(1) They shall be constructed of steel not less than 4 in. (10 cm) in diameter and concrete filled.
(2) They shall be spaced not more than 4 ft (1.2 m) between posts on center.
(3) They shall be set not less than 3 ft (0.9 m) deep in a concrete footing of not less than a 15 in. (38 cm) diameter.
(4) They shall be set with the top of the posts not less than 3 ft (0.9 m) above ground.
(5) They shall be located not less than 5 ft (1.5 m) from the tank.

60.1.2.14 Electrical Wiring and Equipment.

60.1.2.14.1 General. Electrical wiring and equipment shall be installed in accordance with Section 11.1.

60.1.2.14.2 Static Accumulation. When processes or conditions exist where a flammable mixture could be ignited by static electricity, means shall be provided to prevent the accumulation of a static charge.

60.1.2.15 Protection from Light. Materials that are sensitive to light shall be stored in containers designed to protect them from such exposure.

60.1.2.16 Shock Padding. Materials that are shock sensitive shall be padded, suspended, or otherwise protected against accidental dislodgement and dislodgement during seismic activity.

60.1.2.17 Separation of Incompatible Materials.

60.1.2.17.1 Incompatible materials in storage and storage of materials incompatible with materials in use shall be separated when the stored materials are in containers having a capacity of more than 5 lb (2.268 kg) or ½ gal (1.89 L).

60.1.2.17.2 Separation shall be accomplished by one of the following methods:

(1) Segregating incompatible materials storage by a distance of not less than 20 ft (6.1 m)
(2) Isolating incompatible materials storage by a noncombustible partition extending not less than 18 in. (46 cm) above and to the sides of the stored material
(3) Storing liquid and solid materials in hazardous materials storage cabinets complying with 60.1.2.23
(4) Storing compressed gases in gas cabinets or exhausted enclosures complying with Chapter 63

60.1.2.17.3 Materials that are incompatible shall not be stored within the same cabinet or enclosure.

60.1.2.18 Hazardous Materials Storage Cabinets. Where they are required by this *Code*, hazardous materials storage cabinets shall comply with 60.1.2.23.

60.1.2.19 Shelf Storage. Shelving shall be of substantial construction and adequately braced and anchored.

60.1.2.19.1 Shelves shall be provided with a lip or guard where used for the storage of individual containers, except under either of the following conditions:

(1) Where storage is located in hazardous materials storage cabinets or laboratory furniture specifically designed for such use
(2) Where amounts of hazardous materials in storage do not exceed the quantity threshold for requiring a permit in accordance with 60.1.2.3 through 60.1.2.3.2.

60.1.2.19.2 Shelf storage of hazardous materials shall be maintained in an orderly manner.

60.1.2.20* Seismic Protection. Machinery and equipment utilizing hazardous materials in areas subject to seismic activity shall be seismically anchored in accordance with the building code.

60.1.2.21 Outdoor Storage and Use Areas. Outdoor storage and use areas for hazardous materials shall comply with the following:

(1) Outdoor storage and use areas shall be kept free of weeds, debris, and common combustible materials not necessary to the storage or use of hazardous materials.
(2) The area surrounding an outdoor storage and use area shall be kept clear of weeds, debris, and common combustible materials not necessary to the storage or use of hazardous materials for a minimum distance of 15 ft (4.5 m).
(3) Outdoor storage and use areas for hazardous materials shall be located not closer than 20 ft (6.1 m) from a property line that can be built upon, street, alley, or public way, except that a 2-hour fire barrier wall, without openings and extending not less than 30 in. (76 cm) above and to the sides of the storage area shall be permitted in lieu of such distance.

60.1.2.22 Maintenance Required.

60.1.2.22.1 Equipment, machinery, and required detection and alarm systems associated with hazardous materials shall be maintained in an operable condition.

60.1.2.22.2 Defective containers, cylinders, and tanks shall be removed from service, repaired, or disposed of in an approved manner.

60.1.2.22.3 Defective equipment or machinery shall be removed from service and repaired or replaced.

60.1.2.22.4 Required detection and alarm systems that are defective shall be replaced or repaired.

60.1.2.23 Hazardous Materials Storage Cabinets. When storage cabinets are used to increase maximum allowable quantities per control area or to otherwise comply with a specific provision in Chapter 60, such cabinets shall be in accordance with the following:

(1) Cabinets shall be constructed of metal.
(2) The interior of cabinets shall be treated, coated, or constructed of materials that are nonreactive with the hazardous material stored, and such treatment, coating, or construction shall include the entire interior of the cabinet.
(3) Cabinets shall be either listed as suitable for the intended storage or constructed in accordance with the following:
    (a) Cabinets shall be of steel having a thickness of not less than 0.044 in. (1.12 mm) (18 gauge)
    (b) The cabinet, including the door, shall be double-walled with 1½ in. (38.1 mm) airspace between the walls.
    (c) Joints shall be riveted or welded and shall be tight-fitting.
    (d) Doors shall be well fitted, self-closing, and equipped with a self-latching device.
    (e) The bottoms of cabinets utilized for the storage of liquids shall be liquidtight to a minimum height of 2 in. (5 cm).
    (f) For requirements regarding electrical equipment and devices within cabinets used for the storage of hazardous gases or liquids, see Section 11.1.

60.1.2.24 Clearance from Combustibles for Outdoor Storage Areas and Outdoor Storage Tanks. The area surrounding outdoor storage areas or tanks shall be kept clear of combustible materials and vegetation for a minimum distance of 30 ft (9.1 m).

60.1.3 Quantity Limits.

60.1.3.1 General. Maximum allowable quantities of hazardous materials per control area shall be as specified in Table 60.1.3.1, except as modified by 60.1.3.2 and 60.1.3.3. [*5000*:34.1.3.1]

60.1.3.2 Special Occupancy Limits. The maximum allowable quantities of hazardous materials per control area in assembly, ambulatory health care, business, educational, day-care, health care, detention and correctional, and residential occupancies consisting of lodging and rooming houses, hotels, dormitories, apartments, and residential board and care facilities shall be as specified in Table 60.1.3.2(a) through Table 60.1.3.2(h). [*5000*:34.1.3.2]

Table 60.1.3.1 Maximum Allowable Quantity (MAQ) of Hazardous Materials per Control Area[a]

Material	Class	High Hazard Contents Level	Storage			Use — Closed Systems			Use — Open Systems	
			Solid Pounds (ft^3)	Liquid Gallons (lb)	Gas[b] (ft^3)	Solid Pounds (ft^3)	Liquid Gallons (lb)	Gas[b] (ft^3)	Solid Pounds (ft^3)	Liquid Gallons (lb)
Physical Hazard Materials										
Combustible liquid[c,d,e,f]	II IIIA IIIB	2 or 3 2 or 3 NA	NA	120[g,h] 330[g,h] 13,200[g,i]	NA	NA	120[h] 330[h] 13,200[i]	NA	NA	30[h] 80[h] 13,200[i]
Consumer fireworks	1.4G	3	125[g,h,k]	NA	NA	NA	NA	NA	NA	NA
Cryogenic liquid	Flammable Oxidizing	2 3	NA NA	45[h] 45[h]	NA NA	NA NA	45[h] 45[h]	NA NA	NA NA	10[h] 10[h]
Explosives	NA	1	1[g,l,m,n]	(1)[g,l,n]	NA	1/4[l]	(1/4)[l]	NA	1/4[l]	(1/4)[l]
Flammable gas[d]	Gaseous Liquefied Liquefied petroleum (LP)	2 2 2	NA NA NA	NA 30[g,h] 300[o,p]	1,000[g,h] NA NA	NA NA NA	NA 30[g,h] 300	1,000[g,h] NA NA	NA NA NA	NA NA NA
Flammable liquid[c,d,f,q]	IA IB and IC Combination (IA, IB, IC)	2 or 3	NA	30[g,h] 120[g,h] 120[g,h,r]	NA	NA	30[h] 120[g,h] 120[h,r]	NA	NA	10[h] 30[g,h] 30[h,r]
Flammable solid	NA	3	125[g,h]	NA	NA	125[h]	NA	NA	25 [g,h]	NA
Organic peroxide	Unclassified detonatable I II III IV V	1 1 2 3 NA NA	1[g,l] 5[g,h] 50[g,h] 125[g,h] NL NL	(1)[g,l] (5)[g,h] (50)[g,h] (125)[g,h] NL NL	NA NA NA NA NA NA	1/4[l] 1[h] 50[h] 125[h] NL NL	(1/4)[l] (1)[h] (50)[h] (125)[h] NL NL	NA NA NA NA NA NA	1/4[l] 1[h] 10[h] 25[h] NL NL	(1/4)[l] (1)[h] (10)[h] (25)[h] NL NL
Oxidizer	4 3[j] 2 1	1 2 or 3 3 NA	1[g,l] 10[g,h] 250[g,h] 4,000[g,i]	(1)[g,l] (10)[g,h] (250)[g,h] (4,000)[g,i]	NA NA NA NA	1/4[l] 2[h] 250[h] 4,000[i]	(1/4)[l] (2)[h] (250)[h] (4,000)[i]	NA NA NA NA	1/4[l] 2[h] 50[h] 1,000[i]	(1/4)[l] (2)[h] (50)[h] (1,000)[i]
Oxidizing gas	Gaseous Liquefied	3 NA	NA NA	NA 15[g,h]	1,500[g,h] NA	NA NA	NA 15[g,h]	1,500[g,h] NA	NA NA	NA NA
Pyrophoric	NA	2	4[g,l]	(4)[g,l]	50[g,l]	1[l]	(1)[l]	10[g,l]	0	0
Unstable (reactive)	4 3 2 1	1 1 or 2 2 NA	1[g,l] 5[g,h] 50[g,h] NL	(1)[g,l] (5)[g,h] (50)[g,h] NL	10[g,l] 50[g,h] 750[g,h] NL	1/4[l] 1[h] 50[h] NL	(1/4)[l] (1)[h] (50)[h] NL	2[g,l] 10[g,h] 750[g,h] NL	1/4[l] 1[h] 10[h] NL	(1/4)[l] (1)[h] (10)[h] NL
Water-reactive	3 2 1	2 3 NA	5[g,h] 50[g,h] NL	(5)[g,h] (50)[g,h] NL	NA NA NA	5[h] 50[h] NL	(5)[h] (50)[h] NL	NA NA NA	1[h] 10[h] NL	(1)[h] (10)[h] NL

(continues)

Table 60.1.3.1 ***Continued***

Material	Class	High Hazard Contents Level	Storage			Use — Closed Systems			Use — Open Systems	
			Solid Pounds (ft^3)	Liquid Gallons (lb)	Gas[b] (ft^3)	Solid Pounds (ft^3)	Liquid Gallons (lb)	Gas[b] (ft^3)	Solid Pounds (ft^3)	Liquid Gallons (lb)
Health Hazard Materials										
Corrosive	NA	4	5,000[g,h]	500[g,h]	810[g,h,s]	5,000[h]	500[h]	810[g,h,s]	1,000[h]	100[h]
Highly toxic	NA	4	10[g,h]	(10)[g,h]	20[h,t]	10[h]	(10)[h]	20[h,t]	3[h]	(3)[h]
Toxic	NA	4	500[g,h]	(500)[g,h]	810[g,h]	500[h]	(500)[h]	810[g,h]	125[h]	(125)[h]

For SI units, 1 lb = 0.454 kg; 1 ft^3 = 0.0283 m^3; 1 gal = 3.785 L.

NA: Not applicable. NL: Not limited.

Note: [a] See 60.1.3.2 for exceptions to tabular amounts. For use of control areas, see 60.2.4. Table values in parentheses correspond to the unit name in parentheses at the top of the column. The aggregate quantity in use and storage is not permitted to exceed the quantity listed for storage. In addition, quantities in specific occupancies are not permitted to exceed the limits in 60.1.3.2.

[b] Measured at 70°F (21°C) and 14.7 psi (30 kPa).

[c] Inside a building, the maximum capacity of a combustible liquid storage system that is connected to a fuel oil piping system is permitted to be 660 gal (2,500 L), provided that such system conforms to NFPA 31, *Standard for the Installation of Oil-Burning Equipment.*

[d] Flammable and combustible liquids and flammable gases in the fuel tanks of mobile equipment or vehicles are permitted to exceed the MAQ where the equipment is stored and operated in accordance with this *Code.*

[e] In storage, low, and ordinary hazard occupancies, the storage of Class II combustible liquids is required to be limited to a maximum quantity of 1,375 gal (5204 L); Class IIIA combustible liquids are required to be limited to a maximum quantity of 2,750 gal (10,409 L); and Class IIIB combustible liquids are required to be limited to a maximum quantity of 13,750 gal (52,044 L) where stored in accordance with all the requirements in NFPA 30 for general-purpose warehouses.

[f] The quantity of fuel in aircraft in hangars is required to be in accordance with NFPA 409, *Standard on Aircraft Hangars.*

[g] Quantities are permitted to be increased 100 percent where stored in approved cabinets, gas cabinets, exhausted enclosures, explosives magazines, or safety cans, as appropriate for the material stored, in accordance with this *Code.* Where footnote h also applies, the increase for both footnotes is permitted to be applied accumulatively.

[h] Maximum quantities are permitted to be increased 100 percent in buildings equipped throughout with an automatic sprinkler system in accordance with NFPA 13, *Standard for the Installation of Sprinkler Systems.* Where footnote g also applies, the increase for both footnotes is permitted to be applied accumulatively.

[i] The permitted quantities are not limited in a building equipped throughout with an automatic sprinkler system in accordance with NFPA 13.

[j] A maximum quantity of 200 lb (91 kg) of solid or 20 gal (76 L) of liquid Class 3 oxidizers is permitted where such materials are necessary for maintenance purposes, operation, or sanitation of equipment. Storage containers and the manner of storage are required to be approved.

[k] Unless the actual weight of the pyrotechnic composition of the consumer fireworks, 1.4G, is known, 25 percent of the gross weight of the fireworks, including packaging, is permitted to be used to determine the weight of the fireworks for the purpose of this table.

[l] Permitted only in buildings equipped throughout with an automatic sprinkler system in accordance with NFPA 13.

[m] Maximum quantities of black powder, smokeless propellant, and small arms primers stored or displayed in mercantile occupancies or stored in one- or two-family dwellings are permitted to exceed the amount specified by this table where such storage complies with the requirements of NFPA 495, *Explosive Materials Code,* Chapter 13.

[n] In lieu of the maximum allowable quantity limit per control area, the maximum aggregate quantity per building of special explosive devices in industrial, mercantile, and storage occupancies is required to be 50 lb (23 kg).

[o] Additional storage locations are required to be separated by a minimum of 300 ft (92 m).

[p] In mercantile occupancies, storage of LP-Gas is limited to a maximum of 200 lb (91 kg) in nominal 1 lb (0.45 kg) LP-Gas containers.

[q] In storage, low, and ordinary hazard occupancies, the storage of Class IA flammable liquids is not permitted, and the combination storage of Class IB and Class IC flammable liquids is required to be limited to a maximum quantity of 660 gal (2,500 L) where stored in accordance with all the requirements in NFPA 30 for general-purpose warehouses.

[r] Containing not more than the maximum allowable quantity per control area of Class IA, Class IB, or Class IC flammable liquids.

[s] A single cylinder containing 150 lb (68 kg) or less of anhydrous ammonia in a single control area in a nonsprinklered building is considered to be the maximum allowable quantity. Two cylinders, each containing 150 lb (68 kg) or less, in a single control area is considered to be the maximum allowable quantity, provided that the building is equipped throughout with an automatic sprinkler system in accordance with NFPA 13.

[t] Allowed only where stored in approved, exhausted gas cabinets or exhausted enclosures, as specified in this *Code.* [***5000***:Table 34.1.3.1]

Table 60.1.3.2(a) Maximum Allowable Quantities (MAQ) of Hazardous Materials per Control Area in Assembly Occupancies

Material	Class	Solid	Liquid	Gas[a] (at NTP)
Flammable and combustible liquid[b,c]	I and II combined	NP	10 gal	NP
	IIIA	NP	60 gal	NP
	IIIB	NP	120 gal	NP
Cryogenic liquid	Flammable	NP	10 gal	NP
	Oxidizing	NP	10 gal	NP
Explosives[d,e,f,g]	NA	NP	NP	NP
Flammable gas[c,h]	Gaseous	NP	NP	NP
	Liquefied	NP	20 lb	NP
Consumer fireworks	1.4G	NP	NP	NP
Flammable solid	NA	5 lb	NP	NP
Oxidizers	4	NP	NP	NP
	3	10 lb[i]	1 gal[i]	NP
	2	250 lb	25 gal	NP
	1	4,000 lb	400 gal	NP
Oxidizing gas[h]	Gaseous	NP	NP	NP
	Liquefied	NP	15 gal	NP
Organic peroxides	Unclassified detonatable	NP	NP	NP
	I	NP	NP	NP
	II	NP	NP	NP
	III	1,500 lb	1,500 lb	NP
	IV	100,000 lb	100,000 lb	NP
	V	NL	NL	NP
Pyrophoric materials	NA	1 lb	1 lb	NP
Unstable reactives	4	¼ lb	¼ lb	NP
	3	1 lb	1 lb	NP
	2	10 lb	10 lb	NP[h]
	1	NL	NL	NP
Water-reactive	3	1 lb	1 lb	NP
	2	10 lb	10 lb	NP
	1	NL	NL	NP
Corrosives	NA	1,000 lb	100 gal	NP
Highly toxic	NA	3 lb	3 lb	NP[j]
Toxic	NA	125 lb	125 lb	NP[j]

For SI units, 1 lb = 0.454 kg; 1 gal = 3.785 L; 1 ft^3 = 0.0283 m^3.

NTP: Normal temperature and pressure [measured at 70°F (21°C) and 14.7 psi (30 kPa)]. NP: Not permitted. NA: Not applicable. NL: Not limited.

[a]Unlimited amounts of gas are permitted to be used for personal medical or emergency medical use.

[b]Storage in excess of 10 gal (38 L) of Class I and Class II liquids combined or 60 gal (227 L) of Class IIIA liquids is permitted where stored in safety cabinets with an aggregate quantity not to exceed 180 gal (681 L).

[c]Fuel in the tank of operating mobile equipment is permitted to exceed the specified quantity where the equipment is operated in accordance with this *Code*.

[d]The use of explosive materials required by federal, state, or municipal agencies while engaged in normal or emergency performance of duties is not required to be limited. The storage of explosive materials is required to be in accordance with the requirements of NFPA 495.

[e]The storage and use of explosive materials in medicines and medicinal agents in the forms prescribed by the official United States Pharmacopoeia or the National Formulary are not required to be limited.

[f]The storage and use of propellant-actuated devices or propellant-actuated industrial tools manufactured, imported, or distributed for their intended purposes are required to be limited to 50 lb (23 kg) net explosive weight.

[g]The storage and use of small arms ammunition, and components thereof, are permitted where in accordance with NFPA 495.

[h]Fuel or oxidizing gas used for maintenance, repair, and operation of equipment is not permitted to exceed 250 ft^3 (7.1 m^3).

[i]A maximum quantity of 200 lb (91 kg) of solid or 20 gal (76 L) of liquid Class 3 oxidizer is permitted where such materials are necessary for maintenance purposes, operation, or sanitation of equipment. Storage containers and the manner of storage are required to be approved.

[j]Gas cylinders not exceeding 20 ft^3 (0.57 m^3) at NTP are permitted in gas cabinets or fume hoods. [***5000***:Table 34.1.3.2(a)]

Table 60.1.3.2(b) Maximum Allowable Quantities (MAQ) of Hazardous Materials per Control Area in Ambulatory Health Care Occupancies

Material	Class	Solid	Liquid	Gas[a] (at NTP)
Flammable and combustible liquid[b,c]	I and II combined	NP	10 gal	NP
	IIIA	NP	60 gal	NP
	IIIB	NP	120 gal[d]	NP
Cryogenic liquid	Flammable	NP	10 gal	NP
	Oxidizing	NP	10 gal	NP
Explosives[e,f,g]	NA	NP	NP	NP
Flammable gas[c,h]	Gaseous	NP	NP	NP
	Liquefied	NP	20 lb	NP
Consumer fireworks	1.4G	NP	NP	NP
Flammable solid	NA	5 lb	NP	NP
Oxidizers	4	NP	NP	NP
	3	10 lb[i]	1 gal[i]	NP
	2	250 lb	25 gal	NP
	1	4,000 lb[d]	400 gal[d]	NP
Oxidizing gas	Gaseous	NP	NP	per NFPA 99, *Standard for Health Care Facilities*
	Liquefied	NP	15 gal	NP
Organic peroxides	Unclassified detonatable	NP	NP	NA
	I	NP	NP	NA
	II	NP	NP	NA
	III	1,500 lb	1,500 lb	NA
	IV	100,000 lb	100,000 lb	NA
	V	NL	NL	NA
Pyrophoric materials	NA	NP	NP	NP
Unstable reactives	4	NP	NP	NP
	3	NP	NP	NP
	2	10 lb	10 lb	NP[h]
	1	NL	NL	NP
Water-reactive	3	1 lb	1 lb	NA
	2	10 lb	10 lb	NA
	1	NL	NL	NA
Corrosives	NA	1,000 lb	100 gal	NP
Highly toxic	NA	3 lb	3 lb	NP[j]
Toxic	NA	125 lb	125 lb	NP[j]

For SI units, 1 lb = 0.454 kg; 1 gal = 3.785 L; 1 ft^3 = 0.0283 m^3.

NTP: Normal temperature and pressure [70°F (21°C) and 14.7 psi (30 kPa)]. NP: Not permitted. NA: Not applicable. NL: Not limited.

[a]Unlimited amounts of gas are permitted to be used for personal medical or emergency medical use.

[b]Storage in excess of 10 gal (38 L) of Class I and Class II liquids combined or 60 gal (227 L) of Class IIIA liquids is permitted where stored in safety cabinets with an aggregate quantity not to exceed 180 gal (681 L).

[c]Fuel in the tank of operating mobile equipment is permitted to exceed the specified quantity where the equipment is operated in accordance with this *Code*.

[d]The permitted quantities are not limited in a building protected throughout by automatic sprinkler systems in accordance with NFPA 13.

[e]The use of explosive materials required by federal, state, or municipal agencies while engaged in normal or emergency performance of duties is not required to be limited. The storage of explosive materials is required to be in accordance with the requirements of NFPA 495.

[f]The storage and use of explosive materials in medicines and medicinal agents in the forms prescribed by the official United States Pharmacopoeia or the National Formulary are not required to be limited.

[g]The storage and use of propellant-actuated devices or propellant-actuated industrial tools manufactured, imported, or distributed for their intended purposes are required to be limited to 50 lb (23 kg) net explosive weight.

[h]Fuel or oxidizing gas used for maintenance, repair, and operation of equipment is not permitted to exceed 250 ft^3 (7.1 m^3).

[i]A maximum quantity of 200 lb (91 kg) of solid or 20 gal (76 L) of liquid Class 3 oxidizer is permitted where such materials are necessary for maintenance purposes, operation, or sanitation of equipment. Storage containers and the manner of storage are required to be approved.

[j]Gas cylinders not exceeding 20 ft^3 (0.57 m^3) at NTP are permitted in gas cabinets or fume hoods. [***5000***:Table 34.1.3.2(b)]

Table 60.1.3.2(c) Maximum Allowable Quantities (MAQ) of Hazardous Materials per Control Area in Business Occupancies

Material	Class	Solid	Liquid	Gas[a] (at NTP)
Flammable and combustible liquid[b,c]	I and II combined	NP	10 gal	NP
	IIIA	NP	60 gal	NP
	IIIB	NP	120 gal	NP
Cryogenic liquid	Flammable	NP	10 gal	NP
	Oxidizing	NP	10 gal	NP
Explosives[d,e,f,g]	NA	¼ lb	¼ lb	NP
Flammable gas[c]	Gaseous	NP	NP	1,000 ft^3
	Liquefied	NP	20 lb	NP
Consumer fireworks	1.4G	NP	NP	NP
Flammable solid	NA	5 lb	NP	NP
Oxidizers	4	NP	NP	NP
	3	10 lb[h]	1 gal[h]	NP
	2	250 lb	25 gal	NP
	1	4,000 lb	400 gal	NP
Oxidizing gas	Gaseous	NP	NP	1,500 ft^3
	Liquefied	NP	15 gal	NP
Organic peroxides	Unclassified detonatable	NP	NP	NP
	I	NP	NP	NP
	II	NP	NP	NP
	III	1,500 lb	1,500 lb	NP
	IV	100,000 lb	100,000 lb	NP
	V	NL	NL	NP
Pyrophoric materials	NA	1 lb	1 lb	10 ft^3
Unstable reactives	4	¼ lb	¼ lb	2 ft^3
	3	1 lb	1 lb	10 ft^3
	2	10 lb	10 lb	750 ft^3
	1	NL	NL	NL
Water-reactive	3	1 lb	1 lb	NP
	2	10 lb	10 lb	NP
	1	NL	NL	NP
Corrosives	NA	1,000 lb	100 gal	810 ft^3
Highly toxic[i]	NA	3 lb	3 lb	20 ft^3
Toxic[i]	NA	125 lb	125 lb	810 ft^3

For SI units, 1 lb = 0.454 kg; 1 gal = 3.785 L; 1 ft^3 = 0.0283 m^3.

NTP: Normal temperature and pressure [measured at 70°F (21°C) and 14.7 psi (30 kPa)]. NP: Not permitted. NA: Not applicable. NL: Not limited.

[a]Unlimited amounts of gas are permitted to be used for personal medical or emergency medical use.

[b]Storage in excess of 10 gal (38 L) of Class I and Class II liquids combined or 60 gal (227 L) of Class IIIA liquids is permitted where stored in safety cabinets with an aggregate quantity not to exceed 180 gal (681 L).

[c]Fuel in the tank of operating mobile equipment is permitted to exceed the specified quantity where the equipment is operated in accordance with this *Code*.

[d]The use of explosive materials required by federal, state, or municipal agencies while engaged in normal or emergency performance of duties is not required to be limited. The storage of explosive materials is required to be in accordance with the requirements of NFPA 495.

[e]The storage and use of explosive materials in medicines and medicinal agents in the forms prescribed by the official United States Pharmacopoeia or the National Formulary are not required to be limited.

[f]The storage and use of propellant-actuated devices or propellant-actuated industrial tools manufactured, imported, or distributed for their intended purposes are required to be limited to 50 lb (23 kg) net explosive weight.

[g]The storage and use of small arms ammunition, and components thereof, are permitted where in accordance with NFPA 495.

[h]A maximum quantity of 200 lb (91 kg) of solid or 20 gal (76 L) of liquid Class 3 oxidizer is permitted where such materials are necessary for maintenance purposes, operation, or sanitation of equipment. Storage containers and the manner of storage are required to be approved.

[i]Gas cylinders not exceeding 20 ft^3 (0.57 m^3) at NTP are permitted in gas cabinets or fume hoods. [***5000:*** Table 34.1.3.2(c)]

Table 60.1.3.2(d) Maximum Allowable Quantities (MAQ) of Hazardous Materials per Control Area in Educational Occupancies

Material	Class	Solid	Liquid	Gas[a] (at NTP)
Flammable and combustible liquid[b,c]	I and II combined	NP	10 gal	NP
	IIIA	NP	60 gal	NP
	IIIB	NP	120 gal[d]	NP
Cryogenic liquid	Flammable	NP	10 gal	NP
	Oxidizing	NP	10 gal	NP
Explosives[e,f,g,h]	NA	NP	NP	NP
Flammable gas[c,i]	Gaseous	NP	NP	NP
	Liquefied[j]	NP	20 lb	NP
Consumer fireworks	1.4G	NP	NP	NP
Flammable solid	NA	5 lb	NP	NP
Oxidizers	4	NP	NP	NP
	3	10 lb[k]	1 gal[k]	NP
	2	250 lb	25 gal	NP
	1	4,000 lb[d]	400 gal[d]	NP
Oxidizing gas[i]	Gaseous	NP	NP	NP
	Liquefied	NP	15 gal	NP
Organic peroxides	Unclassified detonatable	NP	NP	NP
	I	NP	NP	NP
	II	NP	NP	NP
	III	1,500 lb	1,500 lb	NP
	IV	100,000 lb	100,000 lb	NP
	V	NL	NL	NP
Pyrophoric materials	NA	NP	NP	NP
Unstable reactives	4	NP	NP	2 ft^3
	3	NP	NP	NP
	2	10 lb	10 lb	NP[i]
	1	NL	NL	NP
Water-reactive	3	1 lb	1 lb	NA
	2	10 lb	10 lb	NA
	1	NL	NL	NA
Corrosives	NA	1,000 lb	100 gal	NP
Highly toxic	NA	3 lb	3 lb	NP[l]
Toxic	NA	125 lb	125 lb	NP[l]

For SI units, 1 lb = 0.454 kg; 1 gal = 3.785 L; 1 ft^3 = 0.0283 m^3; 1 ft = 0.3048 m.

NTP: Normal temperature and pressure [measured at 70°F (21°C) and 14.7 psi (30 kPa)]. NP: Not permitted. NA: Not applicable. NL: Not limited.

[a]Unlimited amounts of gas are permitted to be used for personal medical or emergency medical use.

[b]Storage in excess of 10 gal (38 L) of Class I and Class II liquids combined or 60 gal (227 L) of Class IIIA liquids is permitted where stored in safety cabinets with an aggregate quantity not to exceed 180 gal (681 L).

[c]Fuel in the tank of operating mobile equipment is permitted to exceed the specified quantity where the equipment is operated in accordance with this *Code*.

[d]The permitted quantities are not limited in a building protected throughout by automatic sprinkler systems in accordance with NFPA 13.

[e]The use of explosive materials required by federal, state, or municipal agencies while engaged in normal or emergency performance of duties is not required to be limited. The storage of explosive materials is required to be in accordance with the requirements of NFPA 495.

[f]The storage and use of explosive materials in medicines and medicinal agents in the forms prescribed by the official United States Pharmacopoeia or the National Formulary are not required to be limited.

[g]The storage and use of propellant-actuated devices or propellant-actuated industrial tools manufactured, imported, or distributed for their intended purposes are required to be limited to 50 lb (23 kg) net explosive weight.

[h]The storage and use of small arms ammunition, and components thereof, are permitted where in accordance with NFPA 495.

[i]Fuel or oxidizing gas used for maintenance, repair, and operation of equipment is not permitted to exceed 250 ft^3 (7.1 m^3).

[j]Storage in laboratories only; additional 20 lb units where minimum 20 ft (6.1 m) separation is provided.

[k]A maximum quantity of 200 lb (91 kg) of solid or 20 gal (76 L) of liquid Class 3 oxidizer is permitted where such materials are necessary for maintenance purposes, operation, or sanitation of equipment. Storage containers and the manner of storage are required to be approved.

[l]Gas cylinders not exceeding 20 ft^3 (0.57 m^3) at NTP are permitted in gas cabinets or fume hoods. [***5000:*** Table 34.1.3.2(d)]

Table 60.1.3.2(e) Maximum Allowable Quantities (MAQ) of Hazardous Materials per Control Area in Day-Care Occupancies

Material	Class	Solid	Liquid	Gas[a] (at NTP)
Flammable and combustible liquid[b,c]	I and II combined	NP	10 gal	NP
	IIIA	NP	60 gal	NP
	IIIB	NP	120 gal[d]	NP
Cryogenic liquid	Flammable	NP	10 gal	NP
	Oxidizing	NP	10 gal	NP
Explosives[e,f,g]	NA	NP	NP	NP
Flammable gas[c,h]	Gaseous	NP	NP	NP
	Liquefied	NP	20 lb	NP
Consumer fireworks	1.4G	NP	NP	NP
Flammable solid	NA	5 lb	NP	NP
Oxidizers	4	NP	NP	NP
	3	10 lb[d]	1 gal[i]	NP
	2	250 lb	25 gal	NP
	1	4,000 lb[d]	400 gal[d]	NP
Oxidizing gas[h]	Gaseous	NP	NP	NP
	Liquefied	NP	15 gal	NP
Organic peroxides	Unclassified detonatable	NP	NP	NP
	I	NP	NP	NP
	II	NP	NP	NP
	III	1,500 lb	1,500 lb	NP
	IV	100,000 lb	100,000 lb	NP
	V	NL	NL	NP
Pyrophoric materials	NA	NP	NP	NP
Unstable reactives	4	NP	NP	NP
	3	NP	NP	NP
	2	10 pounds	10 pounds	NP[h]
	1	NL	NL	NP
Water-reactive	3	1 lb	1 lb	NA
	2	10 lb	10 lb	NA
	1	NL	NL	NA
Corrosives	NA	1,000 lb	100 gal	NP
Highly toxic	NA	3 lb	3 lb	NP[j]
Toxic	NA	125 lb	125 lb	NP[j]

For SI units, 1 lb = 0.454 kg; 1 gal = 3.785 L; 1 ft^3 = 0.0283 m^3.

NTP: Normal temperature and pressure [measured at 70°F (21°C) and 14.7 psi (30 kPa)]. NP: Not permitted. NA: Not applicable. NL: Not limited.

[a]Unlimited amounts of gas are permitted to be used for personal medical or emergency medical use.

[b]Storage in excess of 10 gal (38 L) of Class I and Class II liquids combined or 60 gal (227 L) of Class IIIA liquids is permitted where stored in safety cabinets with an aggregate quantity not to exceed 180 gal (681 L).

[c]Fuel in the tank of operating mobile equipment is permitted to exceed the specified quantity where the equipment is operated in accordance with this *Code*.

[d]The permitted quantities are not limited in a building protected throughout by automatic sprinkler systems in accordance with NFPA 13.

[e]The use of explosive materials required by federal, state, or municipal agencies while engaged in normal or emergency performance of duties is not required to be limited. The storage of explosive materials is required to be in accordance with the requirements of NFPA 495.

[f]The storage and use of explosive materials in medicines and medicinal agents in the forms prescribed by the official United States Pharmacopoeia or the National Formulary are not required to be limited.

[g]The storage and use of propellant-actuated devices or propellant-actuated industrial tools manufactured, imported, or distributed for their intended purposes are required to be limited to 50 lb (23 kg) net explosive weight.

[h]Fuel or oxidizing gas used for maintenance, repair, and operation of equipment is not permitted to exceed 250 ft^3 (7.1 m^3).

[i]A maximum quantity of 200 lb (91 kg) of solid or 20 gal (76 L) of liquid Class 3 oxidizer is permitted where such materials are necessary for maintenance purposes, operation, or sanitation of equipment. Storage containers and the manner of storage are required to be approved.

[j]Gas cylinders not exceeding 20 ft^3 (0.57 m^3) at NTP are permitted in gas cabinets or fume hoods. [***5000***: Table 34.1.3.2(e)]

Table 60.1.3.2(f) Maximum Allowable Quantities (MAQ) of Hazardous Materials per Control Area in Health Care Occupancies

Material	Class	Solid	Liquid	Gas[a] (at NTP)
Flammable and combustible liquid[b,c]	I and II combined	NP	10 gal	NP
	IIIA	NP	60 gal	NP
	IIIB	NP	120 gal[d]	NP
Cryogenic liquid	Flammable	NP	10 gal	NP
	Oxidizing	NP	10 gal	NP
Explosives[e,f,g]	NA	NP	NP	NP
Flammable gas[c,e,f,g,h]	Gaseous	NP	NP	NP
	Liquefied[i]	NP	20 lb	NP
Consumer fireworks	1.4G	NP	NP	NP
Flammable solid	NA	5 lb	NP	NP
Oxidizers	4	NP	NP	NP
	3	10 lb[j]	1 gal[j]	NP
	2	250 lb	25 gal	NP
	1	4,000 lb[d]	400 gal[d]	NP
Oxidizing gas	Gaseous	NP	NP	per NFPA 99
	Liquefied	NP	15 gal	NP
Organic peroxides	Unclassified detonatable	NP	NP	NP
	I	NP	NP	NP
	II	NP	NP	NP
	III	1,500 lb	1,500 lb	NP
	IV	100,000 lb	100,000 lb	NP
	V	NL	NL	NP
Pyrophoric materials	NA	NP	NP	NP
Unstable reactives	4	NP	NP	NP
	3	NP	NP	NP
	2	10 lb	10 lb	NP[h]
	1	NL	NL	NP
Water-reactive	3	1 lb	1 lb	NA
	2	10 lb	10 lb	NA
	1	NL	NL	NA
Corrosives	NA	1,000 lb	100 gal	NP
Highly toxic	NA	3 lb	3 lb	NP[k]
Toxic	NA	125 lb	125 lb	NP[k]

For SI units, 1 lb = 0.454 kg; 1 gal = 3.785 L; 1 ft^3 = 0.0283 m^3.

NTP: Normal temperature and pressure [measured at 70°F (21°C) and 14.7 psi (30 kPa)]. NP: Not permitted. NA: Not applicable. NL: Not limited.

[a]Unlimited amounts of gas are permitted to be used for personal medical or emergency medical use.

[b]Storage in excess of 10 gal (38 L) of Class I and Class II liquids combined or 60 gal (227 L) of Class IIIA liquids is permitted where stored in safety cabinets with an aggregate quantity not to exceed 180 gal (681 L).

[c]Fuel in the tank of operating mobile equipment is permitted to exceed the specified quantity where the equipment is operated in accordance with this *Code*.

[d]The permitted quantities are not limited in a building protected throughout by automatic sprinkler systems in accordance with NFPA 13.

[e]The use of explosive materials required by federal, state, or municipal agencies while engaged in normal or emergency performance of duties is not required to be limited. The storage of explosive materials is required to be in accordance with the requirements of NFPA 495.

[f]The storage and use of explosive materials in medicines and medicinal agents in the forms prescribed by the official United States Pharmacopoeia or the National Formulary are not required to be limited.

[g]The storage and use of propellant-actuated devices or propellant-actuated industrial tools manufactured, imported, or distributed for their intended purposes are required to be limited to 50 lb (23 kg) net explosive weight.

[h]Fuel or oxidizing gas used for maintenance, repair, and operation of equipment is not permitted to exceed 250 ft^3 (7.1 m^3).

[i]Storage in laboratories only; additional storage of 5 lb units permitted where minimum 20 ft (6.1 m) separation is provided.

[j]A maximum quantity of 200 lb (91 kg) of solid or 20 gal (76 L) of liquid Class 3 oxidizer is permitted where such materials are necessary for maintenance purposes, operation, or sanitation of equipment. Storage containers and the manner of storage are required to be approved.

[k]Gas cylinders not exceeding 20 ft^3 (0.57 m^3) at NTP are permitted in gas cabinets or fume hoods. [***5000***: Table 34.1.3.2(f)]

Table 60.1.3.2(g) Maximum Allowable Quantities (MAQ) of Hazardous Materials per Control Area in Detention and Correctional Occupancies[a]

Material	Class	Solid	Liquid	Gas[a] (at NTP)
Flammable and combustible liquid[b,c]	I and II combined	NP	10 gal	NP
	IIIA	NP	60 gal	NP
	IIIB	NP	120 gal	NP
Cryogenic liquid	Flammable	NP	10 gal	NP
	Oxidizing	NP	10 gal	NP
Explosives[d,e,f,g]	NA	NP	NP	NP
Flammable gas[c,h]	Gaseous	NP	NP	NP
	Liquefied	NP	20 lb	NP
Consumer fireworks	1.4G	NP	NP	NP
Flammable solid	NA	5 lb	NP	NP
Oxidizers	4	NP	NP	NP
	3	10 lb[i]	1 gal[i]	NP
	2	250 lb	25 gal	NP
	1	4,000 lb	400 gal	NP
Oxidizing gas[h]	Gaseous	NA	NP	NP
	Liquefied	NA	15 gal	NP
Organic peroxides	Unclassified detonatable	NP	NP	NP
	I	NP	NP	NP
	II	NP	NP	NP
	III	1,500 lb	1,500 lb	NP
	IV	100,000 lb	100,000 lb	NP
	V	NL	NL	NP
Pyrophoric materials	NA	NP	NP	NP
Unstable reactives	4	NP	NP	NP
	3	NP	NP	NP
	2	10 lb	10 lb	NP[h]
	1	NL	NL	NP
Water-reactive	3	1 lb	1 lb	NP
	2	10 lb	10 lb	NP
	1	NL	NL	NP
Corrosives	NA	1,000 lb	100 gal	NP
Highly toxic	NA	3 lb	3 lb	NP[j]
Toxic	NA	125 lb	125 lb	NP[j]

For SI units, 1 lb = 0.454 kg; 1 gal = 3.785 L; 1 ft^3 = 0.0283 m^3.

NTP: Normal temperature and pressure [measured at 70°F (21°C) and 14.7 psi (30 kPa)]. NP: Not permitted. NA: Not applicable. NL: Not limited.

[a]Unlimited amounts of gas are permitted to be used for personal medical or emergency medical use.

[b]Storage in excess of 10 gal (38 L) of Class I and Class II liquids combined or 60 gal (227 L) of Class IIIA liquids is permitted where stored in safety cabinets with an aggregate quantity not to exceed 180 gal (681 L).

[c]Fuel in the tank of operating mobile equipment is permitted to exceed the specified quantity where the equipment is operated in accordance with this *Code*.

[d]The use of explosive materials required by federal, state, or municipal agencies while engaged in normal or emergency performance of duties is not required to be limited. The storage of explosive materials is required to be in accordance with the requirements of NFPA 495.

[e]The storage and use of explosive materials in medicines and medicinal agents in the forms prescribed by the official United States Pharmacopoeia or the National Formulary are not required to be limited.

[f]The storage and use of propellant-actuated devices or propellant-actuated industrial tools manufactured, imported, or distributed for their intended purposes are required to be limited to 50 lb (23 kg) net explosive weight.

[g]The storage and use of small arms ammunition, and components thereof, are permitted where in accordance with NFPA 495.

[h]Fuel or oxidizing gas used for maintenance, repair, and operation of equipment is not permitted to exceed 250 ft^3 (7.1 m^3).

[i]A maximum quantity of 200 lb (91 kg) of solid or 20 gal (76 L) of liquid Class 3 oxidizer is permitted where such materials are necessary for maintenance purposes, operation, or sanitation of equipment. Storage containers and the manner of storage are required to be approved.

[j]Gas cylinders not exceeding 20 ft^3 (0.57 m^3) at NTP are permitted in gas cabinets or fume hoods. [***5000***: Table 34.1.3.2(g)]

Table 60.1.3.2(h) Maximum Allowable Quantities of Hazardous Materials per Control Area in Residential Occupancies Consisting of Lodging and Rooming Houses, Hotels, Dormitories, Apartments, and Residential Board and Care Facilities

Material	Class	Solid	Liquid	Gas[a] (at NTP)
Flammable and combustible liquid[b,c]	I and II combined	NP	10 gal	NP
	IIIA	NP	60 gal	NP
	IIIB	NP	120 gal	NP
Cryogenic liquid	Flammable	NP	10 gal	NP
	Oxidizing	NP	10 gal	NP
Explosives[d,e,f,g]	NA	NP	NP	NP
Flammable gas[c,h]	Gaseous	NP	NP	NP
	Liquefied[i]	NP	20 lb	NP
Consumer fireworks	1.4G	NP	NP	NP
Flammable solid	NA	5 lb	NP	NP
Oxidizers	4	NP	NP	NP
	3	10 lb[j]	1 gal[j]	NP
	2	250 lb	25 gal	NP
	1	4,000 lb	400 gal	NP
Oxidizing gas[h]	Gaseous	NP	NP	NP
	Liquefied	NP	15 gal	NP
Organic peroxides	Unclassified detonatable	NP	NP	NP
	I	NP	NP	NP
	II	NP	NP	NP
	III	1,500 lb	1,500 lb	NP
	IV	100,000 lb	100,000 lb	NP
	V	NL	NL	NP
Pyrophoric materials	NA	1 lb	1 lb	NP
Unstable reactives	4	¼ lb	¼ lb	NP
	3	1 lb	1 lb	NP
	2	10 lb	10 lb	NP[h]
	1	NL	NL	NP
Water-reactive	3	1 lb	1 lb	NA
	2	10 lb	10 lb	NA
	1	NL	NL	NA
Corrosives	NA	1,000 lb	100 gal	NP
Highly toxic	NA	3 lb	3 lb	NP[k]
Toxic	NA	125 lb	125 lb	NP[k]

For SI units, 1 lb = 0.454 kg; 1 gal = 3.785 L; 1 ft^3 = 0.0283 m^3.

NTP: Normal temperature and pressure [measured at 70°F (21°C) and 14.7 psi (30 kPa)]. NP: Not permitted. NA: Not applicable. NL: Not limited.

[a]Unlimited amounts of gas are permitted to be used for personal medical or emergency medical use.

[b]Storage in excess of 10 gal (38 L) of Class I and Class II liquids combined or 60 gal (227 L) of Class IIIA liquids are permitted where stored in safety cabinets with an aggregate quantity not to exceed 180 gal (681 L).

[c]Fuel in the tank of operating mobile equipment is permitted to exceed the specified quantity where the equipment is operated in accordance with this *Code*.

[d]The use of explosive materials required by federal, state, or municipal agencies while engaged in normal or emergency performance of duties is not required to be limited. The storage of explosive materials is required to be in accordance with the requirements of NFPA 495.

[e]The storage and use of explosive materials in medicines and medicinal agents in the forms prescribed by the official United States Pharmacopoeia or the National Formulary are not required to be limited.

[f]The storage and use of propellant-actuated devices or propellant-actuated industrial tools manufactured, imported, or distributed for their intended purposes are required to be limited to 50 lb (23 kg) net explosive weight.

[g]The storage and use of small arms ammunition, and components thereof, are permitted where in accordance with NFPA 495.

[h]Fuel or oxidizing gas used for maintenance, repair, and operation of equipment is not permitted to exceed 250 ft^3 (7.1 m^3).

[i]Storage containers are not permitted to exceed 2.7 lb water (1.2 kg) capacity.

[j]A maximum quantity of 200 lb (91 kg) of solid or 20 gal (76 L) of liquid Class 3 oxidizer is permitted where such materials are necessary for maintenance purposes, operation, or sanitation of equipment. Storage containers and the manner of storage are required to be approved.

[k]Gas cylinders not exceeding 20 ft^3 (0.57 m^3) at NTP are permitted in gas cabinets or fume hoods. [*5000*:Table 34.1.3.2(h)]

60.1.3.3 Mercantile, Storage, and Industrial Occupancies.

60.1.3.3.1 Maximum Allowable Quantity Increases for Mercantile, Storage, and Industrial Occupancies. The aggregate quantity of nonflammable solid and nonflammable or noncombustible liquid hazardous materials permitted within a single control area of a mercantile, storage, or industrial occupancy shall be permitted to exceed the maximum allowable quantities specified in Table 60.1.3.1, without complying with Protection Level 2, Protection Level 3, or Protection Level 4, provided that the quantities comply with Table 60.1.3.3.1(a) and Table 60.1.3.3.1(b) and that materials are displayed and stored in accordance with the special limitations on storage height, storage density, and other controls specified in this *Code*. [*5000*:34.1.3.3.1]

Table 60.1.3.3.1(a) Maximum Allowable Quantity per Control Area Increases for Selected Hazard Categories in Mercantile, Storage, and Industrial Occupancies

	Maximum Allowable Quantity[a,b]			
	Solids		Liquids	
Hazard Category	lb	kg	gal	L
Physical Hazard Materials: Nonflammable and Solids and Nonflammable/Noncombustible Liquids				
Oxidizers				
Class 3	1,150	522	115	435
Class 2	2,250	1,022	225	852
Class 1	18,000[c]	8,172	1,800[c]	6,813

For SI units, 1 lb = 0.454 kg; 1 gal = 3.785 L.

Note: Maximum quantities for hazard categories not shown are required to be in accordance with Table 60.1.3.1.

[a]Maximum quantities are permitted to be increased 100 percent in buildings that are sprinklered in accordance with NFPA 13. Where footnote (b) also applies, the increase for both footnotes is permitted to be applied.

[b]Maximum quantities are permitted to be increased 100 percent where stored in approved storage cabinets, gas cabinets, or exhausted enclosures in accordance with NFPA 1 UFC. Where footnote (a) also applies, the increase for both footnotes is permitted to be applied.

[c]Quantities are not limited in buildings protected by an automatic sprinkler system complying with NFPA 13. [*5000*: Table 34.1.3.3.1(a)]

60.1.3.3.1.1 Special Controls Required for Increased Quantities. Where quantities of hazardous materials are increased in accordance with 60.1.3.3.1, such materials shall be stored in accordance with the following limitations:

(1) Storage and display of solids shall not exceed 200 lb/ft^2 (976.4 kg/m^2) of floor area actually occupied by solid merchandise.
(2) Storage and display of liquids shall not exceed 20 gal/ft^2 (76 L/m^2) of floor area actually occupied by liquid merchandise.
(3) Storage and display height shall not exceed 6 ft (1.8 m) above the finished floor.

Table 60.1.3.3.1(b) Maximum Allowable Quantity per Control Area Increases for Selected Hazard Categories in Mercantile and Storage Occupancies

	Maximum Allowable Quantity[a,b,c]			
	Solids		Liquids	
Hazard Category	lb	kg	gal	L
Physical Hazard Materials: Nonflammable and Noncombustible Solids and Liquids				
Unstable (reactive)				
Class 3	550	250	55	208
Class 2	1,150	522	115	435
Water-reactive				
Class 3	550	250	55	208
Class 2	1,150	522	115	435
Health Hazard Materials: Nonflammable and Noncombustible Solids and Liquids				
Corrosive	10,000	4540	1,000	3785
Highly toxic	20	9	2	8
Toxic	1,000	454	100	379

For SI units, 1 lb = 0.454 kg; 1 gal = 3.785 L.

[a]Maximum quantities for hazard categories not shown are required to be in accordance with Table 60.1.3.1.

[b]Maximum quantities are permitted to be increased 100 percent in buildings that are sprinklered in accordance with NFPA 13. Where footnote c also applies, the increase for both footnotes can be applied.

[c]Maximum quantities are permitted to be increased 100 percent where stored in approved storage cabinets, gas cabinets, or exhausted enclosures in accordance with NFPA 1 UFC. Where footnote b also applies, the increase for both footnotes is permitted to be applied. [*5000*:Table 34.1.3.3.1(b)]

(4) Individual containers less than 5 gal (19 L) or less than 25 lb (11 kg) shall be stored or displayed on pallets, racks, or shelves.
(5) Racks and shelves used for storage or display shall be in accordance with 60.1.2.19.
(6) Containers shall be approved for the intended use.
(7) Individual containers shall not exceed 100 lb (45.4 kg) or a 5 gal (19 L) capacity.
(8) Incompatible materials shall be separated in accordance with 60.1.2.17.
(9) Except for surfacing, floors shall be of noncombustible construction.
(10) Aisles 4 ft (1.2 m) in width shall be maintained on three sides of the storage or display area.
(11) Hazard identification signs shall be provided in accordance with 60.1.2.11.2.

60.1.3.3.2 Maximum Allowable Quantity Increases for Sale of Alcoholic Beverages, Medicines, Foodstuffs, and Cosmetics.

60.1.3.3.2.1 Quantities of alcoholic beverages shall not be limited in mercantile occupancies, provided that the liquids are packaged in individual containers not exceeding 1.3 gal (4.9 L). [*5000*:34.1.3.3.2.1]

60.1.3.3.2.2 Quantities of medicines, foodstuffs, and cosmetics containing not more than 50 percent by volume of water-miscible liquids, and with the remainder of the solutions not being flammable, shall not be limited, provided that such materials are packaged in individual containers not exceeding 1 gal (3.78 L). [*5000*:34.1.3.3.2.2]

60.1.3.3.3 Maximum Allowable Quantities of Flammable and Combustible Liquids in Industrial Occupancies. The maximum allowable quantities of flammable and combustible liquids in storage and closed use combined in industrial occupancies shall be as follows:

(1) 25 gal (95 L) of Class IA liquids in containers [**30:** 7.5.4.1(1)]
(2) 120 gal (454 L) of Class IB, Class IC, Class II, or Class III liquids in containers [**30:** 7.5.4.1(2)]
(3) 1586 gal (6000 L) of any combination of the following: [**30:**7.5.4.1(3)]
   (a) Class IB, Class IC, Class II, or Class IIIA liquids in metal portable tanks or metal intermediate bulk containers, each not exceeding 793 gal (3000 L)
   (b) Class II or Class IIIA liquids in nonmetallic intermediate bulk containers, each not exceeding 793 gal (3000 L)
(4) 20 portable tanks or intermediate bulk containers each not exceeding 793 gal (3000 L) of Class IIIB liquids [**30:** 7.5.4.1(4)]

[*5000*:34.1.3.3.3]

60.1.4 Performance Alternative. In lieu of complying with Chapter 60 in its entirety, occupancies containing high hazard Level 1 to high hazard Level 5 contents shall be permitted to comply with 60.1.4.1 and 60.1.4.2. [*5000*:34.1.4]

60.1.4.1 Goal. The goal of performance-based designs for facilities containing high hazard contents shall be to protect people and property from the consequences of unauthorized discharges, fires, or explosions involving hazardous materials. [*5000*:34.1.4.1]

60.1.4.1.1 The performance-based designs specified in 60.1.4.1 shall minimize the risk of events described in 60.1.4.1 and shall minimize the consequences of such events if they occur. [*5000*:34.1.4.1.1]

60.1.4.1.2 Performance-based designs shall also comply with Chapters 4 and 5 of *NFPA 5000*. [*5000*:34.1.4.1.2]

60.1.4.2 Objectives.

60.1.4.2.1 To satisfy the goal established in 60.1.4.1, performance-based designs for facilities containing high hazard contents shall identify the properties of hazardous materials to be stored, used, or handled and shall provide adequate and reliable safeguards to accomplish the following objectives, considering both normal operations and possible abnormal conditions:

(1) Minimize the potential occurrence of unwanted releases, fires, or other emergency incidents resulting from the storage, use, or handling of hazardous materials
(2) Minimize the potential failure of buildings, equipment, or processes involving hazardous materials by ensuring that such buildings, equipment, or processes are reliably designed and are suitable for the hazards present
(3) Minimize the potential exposure of people or property to unsafe conditions or events involving an unintended reaction or release of hazardous materials
(4) Minimize the potential for an unintentional reaction that results in a fire, explosion, or other dangerous condition
(5) Provide a means to contain, treat, neutralize, or otherwise handle plausible releases of hazardous materials to minimize the potential for adverse impacts to persons or property outside of the immediate area of a release
(6) Provide appropriate safeguards to minimize the risk of, and limit the damage and injury that might result from, an explosion involving hazardous materials that present explosion hazards
(7) Detect hazardous levels of gases or vapors that are dangerous to health, and alert appropriate persons or mitigate the hazard when the physiological warning properties for such gases or vapors are inadequate to warn of danger prior to personal injury
(8) Maintain power to provide for continued operation of safeguards and important systems that are relied on to prevent or control an emergency condition involving hazardous materials
(9) Maintain ventilation where ventilation is relied on to minimize the risk of emergency conditions involving hazardous materials
(10) Minimize the potential for exposing combustible hazardous materials to unintended sources of ignition, and for exposing any hazardous material to fire or physical damage that can lead to endangerment of people or property [*5000*:34.1.4.2.1]

60.1.4.2.2 As part of the design process, a process hazard analysis and off-site consequence analysis shall be conducted where necessary to reasonably ensure that people and property are satisfactorily protected from dangerous conditions involving hazardous materials. [*5000*:34.1.4.2.2]

60.1.4.2.3 The results of the analyses specified in 60.1.4.2.2 shall be considered when determining active and passive mitigation measures used in accomplishing the objectives set forth in 60.1.4.2.1. [*5000*:34.1.4.2.3]

60.1.4.2.4 In addition to the requirement of 60.1.4.2.3, written procedures for pre-start-up safety reviews, normal and emergency operations, management of change, emergency response, and accident investigation and documentation shall be developed prior to beginning operations at a facility designed in accordance with 60.1.4. [*5000*:34.1.4.2.4]

60.1.4.2.5 Procedures, as described in 60.1.4.2.4, shall be developed with the participation of affected employees. [*5000*:34.1.4.2.5]

60.2 Requirements for All Occupancies Containing High Hazard Contents.

60.2.1 Applicability. Buildings, and portions thereof, containing hazardous materials regulated by this *Code* shall comply with Section 60.2. [*5000*:34.2.1]

60.2.2 Uniform Fire Code. Buildings, and portions thereof, where hazardous materials are stored, used, or handled shall also comply with this *Code*. [*5000*:34.2.2]

60.2.3 Special Information for Permit Application.

60.2.3.1 Permit applications for buildings, and portions thereof, containing high hazard contents shall be accompanied by the following:

(1) Plan showing the location of storage and use areas
(2) Information identifying the maximum quantity of each class of hazardous material stored and used in each area [*5000*:34.2.3.1]

Table 60.2.4.1.1 Design and Number of Control Areas

Floor Level	Maximum Allowable Quantity per Control Area (%)*	Number of Control Areas per Floor	Fire Resistance Rating for Fire Barriers† (hr)
Above grade			
>9	5.0	1	2
7–9	5.0	2	2
4–6	12.5	2	2
3	50.0	2	1
2	75.0	3	1
1	100.0	4	1
Below grade			
1	75	3	1
2	50	2	1
Lower than 2	NA	NA	NA

NA: Not applicable.

*Percentages represent the maximum allowable quantities per control area shown in Table 60.1.3.1, with all of the increases permitted in the footnotes of that table.

†Fire barriers are required to include floors and walls, as necessary, to provide a complete separation from other control areas. [*5000*:Table 34.2.4.1.1]

60.2.3.2 Where required by the AHJ, the permit applicant shall provide, without charge to the jurisdiction, a technical opinion and report prepared by a qualified engineer, specialist, laboratory, or fire safety specialty organization that analyzes the fire safety and life safety properties of the design, operation, or use of the building or facility and demonstrates compliance with this *Code*. [*5000*:34.2.3.2]

60.2.4 Control Areas. Control areas shall be those spaces within a building where quantities of hazardous contents not exceeding the maximum quantities allowed by this *Code* are stored, dispensed, used, or handled. [*5000*:34.2.4]

60.2.4.1 Construction Requirements for Control Areas.

60.2.4.1.1 Control areas shall be separated from each other by fire barriers in accordance with Table 60.2.4.1.1. [*5000*:34.2.4.1.1]

60.2.4.1.2 Where only one control area is present in a building, no special construction provisions shall be required. [*5000*:34.2.4.1.2]

60.2.4.2 Number of Control Areas. The maximum number of control areas within a building shall be in accordance with Table 60.2.4.1.1. [*5000*:34.2.4.2]

60.2.5 Weather Protection. Where weather protection is provided for sheltering outside hazardous material storage or use areas, such storage or use areas shall be considered outside storage or use areas, provided that all of the following conditions are met:

(1) Supports and walls shall not obstruct more than one side or more than 25 percent of the perimeter of the storage or use area.
(2) The distance from the structure and the structural supports to buildings, lot lines, public ways, or means of egress to a public way shall not be less than the distance required by this *Code* for an outside hazardous material storage or use area without weather protection.
(3) Weather-protection structures constructed in accordance with 60.2.5 shall not contain explosive or detonable materials.

[*5000*:34.2.5]

60.2.6 Outdoor Control Areas.

60.2.6.1 A single outdoor control area shall be permitted on any property where the conditions of 60.1.2.21 can be satisfied.

60.2.6.2 Where a property exceeds 10,000 ft^2 (929 m^2), a group of two outdoor control areas shall be permitted where approved and where each control area is separated by a minimum distance of 50 ft (15 m).

60.2.6.3 Where a property exceeds 35,000 ft^2 (3252 m^2), additional groups of outdoor control areas shall be permitted where approved provided that each group is separated by a minimum distance of 300 ft (91 m).

60.2.6.4 Where weather protection is provided as a basis for complying with this *Code*, the weather protection structure shall comply with 60.2.2.2.1.

60.2.6.5 Maximum allowable quantities of hazardous materials shall be as specified in Table 60.2.6.5.

60.3 Requirements for Occupancies Exceeding the Maximum Allowable Quantities per Control Area for High Hazard Contents.

60.3.1 Protection Levels. Buildings, and portions thereof, where high hazard contents are stored, used, or handled shall comply with the protection levels as set forth in Section 60.3. [*5000*:34.3.1]

60.3.1.1 Protection Level 1. Buildings containing quantities of hazardous materials exceeding the maximum allowable quantities of high hazard Level 1 contents permitted in control areas shall comply with applicable regulations for Protection Level 1, as set forth in the building code. High hazard Level 1 contents shall include materials that present a detonation hazard including, but not limited to, the following:

(1) Explosives
(2) Unclassified detonable organic peroxides
(3) Class 4 oxidizers
(4) Detonable pyrophoric materials
(5) Class 3 detonable and Class 4 unstable (reactive) materials [*5000*:34.3.1.1, 6.3.2.4.2]

60.3.1.2 Protection Level 2. Buildings, and portions thereof, containing quantities of hazardous materials exceeding the maximum allowable quantities of high hazard Level 2 contents permitted in control areas shall comply with applicable regulations for Protection Level 2, as set forth in the building code. High hazard Level 2 contents shall include materials that present a deflagration hazard or a hazard from accelerated burning including, but not limited to, the following:

(1) Class I, Class II, or Class III-A flammable or combustible liquids that are used or stored in normally open containers or systems, or in closed containers or systems at gauge pressures of more than 15 psi (103 kPa)
(2) Combustible dusts stored, used, or generated in a manner creating a severe fire or explosion hazard
(3) Flammable gases and flammable cryogenic liquids
(4) Class I organic peroxides
(5) Class 3 solid or liquid oxidizers that are used or stored in normally open containers or systems, or in closed containers or systems at gauge pressures of more than 15 psi (103 kPa)
(6) Nondetonable pyrophoric materials
(7) Class 3 nondetonable unstable (reactive) materials
(8) Class 3 water-reactive materials [*5000*:34.3.1.2, 6.3.2.4.3]

Table 60.2.6.5 Maximum Allowable Quantities of Hazardous Materials per Outdoor Control Area

Material	Class	Storage			Use — Closed Systems			Use — Open Systems	
		Solid Pounds	Liquid Gallons (pounds)	Gas Cubic Feet at NTP	Solid Pounds	Liquid Gallons (pounds)	Gas Cubic Feet at NTP	Solid Pounds	Liquid Gallons (pounds)
Physical Hazard Materials									
Flammable gas									
Gaseous		NA	NA	750	NA	NA	750	NA	NA
Liquefied		NA	15	NA	NA	15	NA	NA	NA
Flammable solid		125	NA	NA	25	NA	NA	25	NA
Organic peroxide	Detonatable	1	(1)	NA	¼	(¼)	NA	¼	(¼)
Organic peroxide	I	5	(5)	NA	1	(1)	NA	1	(1)
	II	50	(50)	NA	50	(50)	NA	10	(10)
	III	125	(125)	NA	125	(125)	NA	25	(25)
	IV	500	(500)	NA	500	(500)	NA	100	(100)
	V	NL	NL	NA	NL	NL	NA	NL	NL
Oxidizer	4	1	(1)	NA	¼	(¼)	NA	¼	(¼)
	3	10	(10)	NA	2	(2)	NA	2	(2)
	2	250	(250)	NA	250	(250)	NA	50	(50)
	1	4000	(4000)	NA	4000	(4000)	NA	1000	(1000)
Oxidizer gas									
Gaseous		NA	NA	1500	NA	NA	1500	NA	NA
Liquefied		NA	15	NA	NA	15	NA	NA	NA
Pyrophoric		4	4	50	1	(1)	10	0	0
Unstable (reactive)	4	1	(1)	10	¼	(¼)	2	¼	(¼)
	3	5	(5)	50	1	(1)	10	1	(1)
	2	50	(50)	250	50	(50)	250	10	(10)
	1	NL	NL	750	NL	NL	NL	NL	NL
Water- reactive	3	5	(5)	NA	5	(5)	NA	1	(1)
	2	50	(50)	NA	50	(50)	NA	10	(10)
	1	NL	NL	NA	NL	NL	NA	NL	NL
Health Hazard Materials									
Corrosive		5000	500	810	5000	500	810	1000	100
Highly toxic		10	(10)	20*	10	(10)	20*	3	(3)
Toxic		500	(500)	810	500	50	810	25	(25)

Notes: For SI units, 1 lb = 0.454 kg; 1 gal = 3.785 L; 1 ft^3 = 0.0283 m^3.
NA = not applicable; NL = not limited.
(1) Table values in parentheses correspond to the unit name in parentheses at the top of the column. For gallons of liquids, divide the amount in pounds by 10.
(2) The aggregate quantities in storage and use shall not exceed the quantity listed for storage.
* Permitted only when used in approved exhausted gas cabinets, exhausted enclosures or fume hoods.

60.3.1.3 Protection Level 3. Buildings, and portions thereof, containing quantities of hazardous materials exceeding the maximum allowable quantities of high hazard Level 3 contents permitted in control areas shall comply with applicable regulations for Protection Level 3, as set forth in the building code. High hazard Level 3 contents shall include materials that readily support combustion or present a physical hazard including, but not limited to, the following:

(1) Level 2 and Level 3 aerosols
(2) Class I, Class II, or Class III-A flammable or combustible liquids that are used or stored in normally closed containers or systems at gauge pressures of less than 15 psi (103 kPa)
(3) Consumer fireworks, 1.4 G
(4) Flammable solids, other than dusts classified as high hazard Level 2, stored, used, or generated in a manner creating a high fire hazard
(5) Class II and Class III organic peroxides
(6) Class 2 solid or liquid oxidizers
(7) Class 3 solid or liquid oxidizers that are used or stored in normally closed containers or systems at gauge pressures of less than 15 psi (103 kPa)
(8) Oxidizing gases and oxidizing cryogenic liquids
(9) Class 2 unstable (reactive) materials
(10) Class 2 water-reactive materials [*5000*:34.3.1.3, 6.3.2.4.4]

60.3.1.4 Protection Level 4. Buildings, and portions thereof, containing quantities of hazardous materials exceeding the maximum allowable quantities of high hazard Level 4 contents permitted in control areas shall comply with applicable regulations for Protection Level 4, as set forth in the building code. High hazard Level 4 contents shall include materials that are acute health hazards including, but not limited to, the following:

(1) Corrosives
(2) Highly toxic materials
(3) Toxic materials [*5000*:34.3.1.4, 6.3.2.4.5]

60.3.1.5 Protection Level 5. Buildings, and portions thereof, used for fabrication of semiconductors or semiconductor research and development and containing quantities of hazardous materials exceeding the maximum allowable quantities of high hazard Level 5 contents permitted in control areas shall comply with applicable regulations for Protection Level 5, as set forth in the building code. High hazard Level 5 contents shall include hazardous production materials (HPM) used in the fabrication of semiconductors or semiconductor research and development. [*5000*:34.3.1.5, 6.3.2.4.6]

60.3.2 General Requirements. The requirements set forth in 60.3.2 shall apply to buildings, or portions thereof, that are required to comply with Protection Level 1 through Protection Level 5 where required by 60.3.1.1 through 60.3.1.5. [*5000*:34.3.2]

60.3.2.1 Fire Protection Systems. Buildings, or portions thereof, required to comply with Protection Level 1 through Protection Level 5 shall be protected by an approved automatic fire sprinkler system complying with Section 13.3. [*5000*:34.3.2.1]

60.3.2.1.1 Electronic supervision of supervisory signals shall be provided in accordance with Section 13.3. [*5000*:34.3.2.1.1]

60.3.2.1.2 Waterflow alarms shall be monitored in accordance with Section 13.3. [*5000*:34.3.2.1.2]

60.3.2.1.3 Rooms or areas that are of noncombustible construction with wholly noncombustible contents shall not be required to comply with 60.3.2.1. [*5000*:34.3.2.1.3]

60.3.2.1.4 Portable magazines not exceeding 120 ft^2 (11.2 m^2) constructed in accordance with NFPA 495 shall not be required to comply with 60.3.2.1. [*5000*:34.3.2.1.4]

60.3.2.2 Building Height Exception. The height of a single-story building, or portion thereof, containing only tanks or industrial process equipment shall not be limited based on the type of construction. [*5000*:34.3.2.2]

60.3.2.3 Separation of Occupancies Having High Hazards. The separation of areas containing high hazard contents from each other and from other use areas shall be as required by Table 60.3.2.3 and shall not be permitted to be reduced with the installation of fire protection systems as required by 60.3.2.1. [*5000*:34.3.2.3]

60.3.2.4 Egress. Egress from areas required to comply with Protection Level 1, Protection Level 2, Protection Level 3, or Protection Level 4 shall comply with Chapter 14, and egress from areas required to comply with Protection Level 5 shall comply with Chapter 14. [*5000*:34.3.2.4]

60.3.2.4.1 Travel Distance Limit. Travel distance to an exit from areas required to comply with Protection Level 1 through Protection Level 5 shall not exceed the distance given in Table 60.3.2.4.1, measured as required in Chapter 14. [*5000*:34.3.2.4.1]

60.3.2.4.2 Capacity of Means of Egress. Egress capacity for high hazard contents areas shall be based on 0.7 in. (18 mm) per person for stairs or 0.4 in. (10 mm) per person for level components and ramps in accordance with 14.8.3. [*5000*:34.3.2.4.2]

60.3.2.4.3 Number of Means of Egress. Not less than two means of egress shall be provided from each building, or portion thereof, required to comply with Section 60.3, unless rooms or spaces do not exceed 200 ft^2 (18.6 m^2), have an occupant load not exceeding three persons, and have a travel distance to the room door not exceeding 25 ft (7.6 m). [*5000*:34.3.2.4.3]

60.3.2.4.4 Dead Ends. Means of egress, for other than rooms or spaces that do not exceed 200 ft^2 (18.6 m^2), have an occupant load not exceeding three persons, and have a travel distance to the room door not exceeding 25 ft (7.6 m), shall be arranged so that there are no dead ends in corridors. [*5000*:34.3.2.4.4]

60.3.2.4.5 Doors. Doors serving high hazard contents areas with occupant loads in excess of five shall be permitted to be provided with a latch or lock only if the latch or lock is panic hardware or fire exit hardware complying with 14.5.3.3. [*5000*:34.3.2.4.5]

60.3.2.5 Ventilation.

60.3.2.5.1 Buildings, or portions thereof, in which explosive, flammable, combustible, corrosive, or highly toxic dusts, mists, fumes, vapors, or gases are, or might be, emitted shall be provided with mechanical exhaust ventilation or natural ventilation where natural ventilation can be shown to be acceptable for the materials as stored. [*5000*:34.3.2.5.1]

60.3.2.5.1.1 Flammable and combustible liquids stored in closed containers in compliance with Chapter 66 and NFPA 30 shall not be required to comply with 60.3.2.5.1. [*5000*:34.3.2.5.1.1]

60.3.2.5.1.2 Solids and liquids, other than combustible or flammable liquids, stored in closed containers shall not be required to comply with 60.3.2.5.1. [*5000*:34.3.2.5.1.2]

Table 60.3.2.3 Required Separation of Occupancies Containing High Hazard Contents (hr)

Occupancy	Protection Level 1	Protection Level 2	Protection Level 3*	Protection Level 4	Protection Level 5
Apartment buildings	NP	4	3	4	4
Assembly ≤ 300	NP	4	3	2	4
Assembly > 300 and ≤ 1000	NP	4	3	2	4
Assembly > 1000	NP	4	3	2	4
Board and care, small	NP	4	3	4	4
Board and care, large	NP	4	3	4	4
Business	NP	2	1	1	1
Day-care > 12	NP	4	3	4	4
Day-care homes	NP	4	3	4	4
Detention and correctional	NP	4	3	4	4
Dwellings, one- and two-family	NP	4	3	4	4
Educational	NP	4	3	2	3
Health care, ambulatory	NP	4	4	4	4
Health care, nonambulatory	NP	4	4	4	4
Hotels and dormitories	NP	4	3	4	4
Industrial, general purpose	NP	2	1	1	1
Industrial, special purpose	NP	2	1	1	1
Lodging and rooming houses	NP	4	3	4	4
Mercantile, Class A	NP	2	1	1	1
Mercantile, Class B	NP	2	1	1	1
Mercantile, Class C	NP	2	1	1	1
Mercantile, covered mall	NP	2	1	1	1
Mercantile, bulk retail	NP	2	1	1	1
Protection Level 1	—	NP	NP	NP	NP
Protection Level 2	NP	—	1	2	2
Protection Level 3	NP	1	—	1	1
Protection Level 4	NP	2	1	—	1
Protection Level 5	NP	2	1	1	—
Storage, low and ordinary hazard	NP	2	1	1	1

NP: Not permitted.
*Rooms in excess of 150 ft^2 (14 m^2), storing flammable liquids, combustible liquids, or Class III oxidizers, are required to be provided with not less than a 2-hour separation. [*5000*:Table 34.3.2.3]

Table 60.3.2.4.1 Travel Distance Limits

Hazard Level	Distance	
	ft	m
1	75	23
2	100	30
3	150	46
4	175	53
5	200	61

[*5000*:Table 34.3.2.4.1]

60.3.2.5.2 Mechanical exhaust systems shall comply with the mechanical code. [*5000*:34.3.2.5.2]

60.3.2.5.3 Mechanical ventilation shall be at a rate of not less than 1 $ft^3/min/ft^2$ (5.1 $L/s/m^2$) of floor area over areas required to comply with Protection Level 1 through Protection Level 5. [*5000*:34.3.2.5.3]

60.3.2.5.4 Areas containing Class I liquids or Class II liquids at temperatures above their flash points, or Class IIIA liquids at temperatures above their flash points, shall be ventilated at a rate sufficient to maintain the concentration of vapors within the area at or below 25 percent of the lower explosive limit. [*5000*:34.3.2.5.4]

60.3.2.5.5 Ventilation requirements shall be determined by calculations based on anticipated fugitive emissions or by sampling of the actual vapor concentration levels under normal operating conditions. [*5000*:34.3.2.5.5]

60.3.2.5.6 Make-up air shall be provided, and provision shall be made for locating make-up air openings to avoid short-circuiting the ventilation. [*5000*:34.3.2.5.6]

60.3.2.5.7 Ducts conveying explosives or flammable vapors, fumes, or dusts shall extend directly to the exterior of the building without entering other spaces. [*5000*:34.3.2.5.7]

60.3.2.5.7.1 Exhaust ducts shall not extend into or through ducts and plenums. [*5000*:34.3.2.5.7.1]

60.3.2.5.7.2 Ducts conveying vapor or fumes having flammable constituents less than 25 percent of their lower flammability limit shall be permitted to pass through other spaces. [*5000*:34.3.2.5.7.2]

60.3.2.5.8 Emissions generated at work stations shall be confined to the area in which they are generated as specified in the mechanical code. [*5000*:34.3.2.5.8]

60.3.2.5.9 The location of supply and exhaust openings shall be in accordance with the mechanical code. [*5000*:34.3.2.5.9]

60.3.2.5.10 Exhaust air contaminated by highly toxic material shall be treated where required by this *Code*. [*5000*:34.3.2.5.10]

60.3.2.5.11 Systems shall operate continuously unless alternate designs are approved. [*5000*:34.3.2.5.11]

60.3.2.5.12 A manual shutoff control for ventilation equipment required by 60.3.2.5 shall be provided outside the room adjacent to the principal access door to the room. [*5000*:34.3.2.5.12]

60.3.2.5.13 The shutoff control described in 60.3.2.5.12 shall be of the break-glass type and shall be labeled as follows: [*5000*:34.3.2.5.13]

VENTILATION SYSTEM EMERGENCY SHUTOFF

60.3.2.5.14 Exhaust ventilation shall be arranged to consider the density of the potential fumes or vapors released. [*5000*:34.3.2.5.14]

60.3.2.5.14.1 For fumes or vapors that are heavier than air, exhaust shall be taken from a point within 12 in. (305 mm) of the floor. [*5000*:34.3.2.5.14.1]

60.3.2.5.14.2 The location of both the exhaust and inlet air openings shall be arranged to provide air movement across all portions of the floor or room to prevent the accumulation of vapors. [*5000*:34.3.2.5.14.2]

60.3.2.5.14.3 Exhaust ventilation shall not be recirculated within the room or building if the materials stored are capable of emitting hazardous vapors. [*5000*:34.3.2.5.14.3]

Table 60.3.2.6 Explosion Control Requirements

Hazard Category	Class	Protection Method
Combustible dust presenting an explosion hazard	NA	Explosion control[a]
Explosives	Detonating	Barricade[b]
	Deflagrating	Explosion control[a]
Flammable gas or cryogen	NA	Explosion control[a]
Flammable liquid[c]	Class IA, storage >1 gal	Explosion control[a]
	Class IA, use	Explosion control[a]
	Class IB, use-open[d]	Explosion control[a]
Organic peroxides	Unclassified	Barricade[b]
Oxidizer liquids and solids	Class I	Barricade[b]
	Class 4	Barricade[b]
Pyrophoric gas[e]	NA	Barricade[b] Explosion control[a]
Unstable (reactive)	Class 4	Barricade[b]
	Class 3 detonating	Barricade[b]
	Class 3 deflagrating	Explosion control[a]
Water-reactive liquids and solids	Class 3	Explosion control[a]
	Class 2 deflagrating	Explosion control[a]

NA: Not applicable.

[a]Explosion control is required to be a deflagration prevention method, such as combustible concentration reduction, or oxidant concentration reduction, or a deflagration control method complying with NFPA 69, *Standard on Explosion Prevention Systems*, or an approved, engineered deflagration-venting method.

[b]Barricades are required to comply with NFPA 495.

[c]Deflagration venting is not required for rooms that are less than or equal to 500 ft^2 (46.5 m^2) in floor area and do not have any exterior walls as set forth in NFPA 30.

[d]A protection method is required where an explosive environment can occur as a result of the dispensing or use process.

[e]Where gas–air mixtures are capable of detonation, barricade construction is required to be provided. [*5000*:Table 34.3.2.6]

60.3.2.5.14.4 Recirculation shall be permitted where it is monitored continuously using a fail-safe system that is designed to automatically sound an alarm, stop recirculation, and provide full exhaust to the outside in the event that vapor–air mixtures in concentrations over one-fourth of the lower flammable limit are detected. [*5000*:34.3.2.5.14.4]

60.3.2.6* Explosion Control. Buildings, or portions thereof, required to comply with Protection Level 1 through Protection Level 3 and containing materials shown in Table 60.3.2.6 shall be provided with a means of explosion control. [*5000*:34.3.2.6]

60.3.2.7 Standby and Emergency Power.

60.3.2.7.1 Where mechanical ventilation, treatment systems, temperature control, alarm, detection, or other electrically operated safety systems are required by this *Code* or the building code, such systems shall be provided with standby power or emergency power as required by 60.3.2.7. [*5000*:34.3.2.7.1]

60.3.2.7.2 Standby power for mechanical ventilation, exhaust treatment, and temperature control systems shall not be required where such systems are engineered and approved as fail-safe. [*5000*:34.3.2.7.2]

60.3.2.7.3 The secondary source of power shall be an approved means of legally required standby power in accordance with NFPA 70, except for areas containing highly toxic or toxic gases, where a legally required emergency power system in accordance with Section 11.7 and NFPA 55, shall be provided to operate safety systems required by this *Code*. [*5000*:34.3.2.7.3]

60.3.2.8 Spill Control and Secondary Containment for Hazardous Materials Liquids and Solids.

60.3.2.8.1 General. Buildings, or portions thereof, required to comply with Protection Level 1 through Protection Level 5 shall be provided with spill control and secondary containment in accordance with 60.3.2.8.2 and 60.3.2.8.3, except for outdoor storage on containment pallets complying with 60.3.2.10. [*5000*:34.3.2.8.1]

60.3.2.8.2 Spill Control.

60.3.2.8.2.1 Buildings, or portions thereof, used for any of the following shall be provided with spill control to prevent the flow of liquids to adjoining areas:

(1) Storage or closed system use of hazardous materials liquids in individual vessels having a capacity of more than 55 gal (208.2 L)
(2) Dispensing of hazardous materials liquids into vessels exceeding a 1.1 gal (4 L) capacity
(3) Open use of hazardous materials in vessels or systems exceeding a 5.3 gal (20 L) capacity [*5000*:34.3.2.8.2.1]

60.3.2.8.2.2 Where spill control is required, floors in indoor locations and similar surfaces in outdoor locations shall be constructed to contain a spill from the largest single vessel by one of the following methods:

(1) Liquid-tight sloped or recessed floors in indoor locations or similar areas in outdoor locations
(2) Liquid-tight floors in indoor locations or similar areas in outdoor locations provided with liquid-tight raised or recessed sills or dikes
(3) Sumps and collection systems [*5000*:34.3.2.8.2.2]

60.3.2.8.2.3 Except for surfacing, the floors, sills, dikes, sumps, and collection systems shall be constructed of noncombustible material, and the liquid-tight seal shall be compatible with the material stored. [*5000*:34.3.2.8.2.3]

60.3.2.8.2.4 Where liquid-tight sills or dikes are provided, they shall not be required at perimeter openings that are provided with an open-grate trench across the opening that connects to an approved collection system. [*5000*:34.3.2.8.2.4]

60.3.2.8.3 Secondary Containment.

60.3.2.8.3.1 Buildings, or portions thereof, used for any of the following shall be provided with secondary containment:

(1) Storage of liquids where the capacity of an individual vessel exceeds 55 gal (208.2 L) or the aggregate capacity of multiple vessels exceeds 1000 gal (3785 L)
(2) Storage of solids where the capacity of an individual vessel exceeds 550 lb (248.8 kg) or the aggregate capacity of multiple vessels exceeds 10,000 lb (4524.8 kg)
(3) Open-use liquids where the capacity of an individual vessel or system exceeds 1.1 gal (4 L)
(4) Open-use liquids where the capacity of multiple vessels or systems exceeds 5.3 gal (20 L) [*5000*:34.3.2.8.3.1]

60.3.2.8.3.2 Buildings, or portions thereof, containing only hazardous materials in listed secondary containment tanks or systems shall not be required to comply with 60.3.2.8.3.1. [*5000*:34.3.2.8.3.2]

60.3.2.8.3.3 Buildings, or portions thereof, containing only flammable solids, explosive solids, or corrosive solids shall not be required to comply with 60.3.2.8.3.1. [*5000*:34.3.2.8.3.3]

60.3.2.8.3.4 Secondary containment shall be achieved by means of drainage control where required by Chapter 66. [*5000*:34.3.2.8.3.4]

60.3.2.8.3.5 The building, room, or area shall contain or drain the hazardous materials and fire protection water through the use of one of the following methods:

(1) Liquid-tight sloped or recessed floors in indoor locations or similar areas in outdoor locations
(2) Liquid-tight floors in indoor locations or similar areas in outdoor locations provided with liquid-tight raised or recessed sills or dikes
(3) Sumps and collection systems
(4) Drainage systems leading to an approved location [*5000*:34.3.2.8.3.5]

60.3.2.8.3.6 Where incompatible materials are present in open containers or systems, such materials shall be separated from each other in the secondary containment system. [*5000*:34.3.2.8.3.6]

60.3.2.8.3.7 Secondary containment for indoor storage areas shall be designed to contain a spill from the largest vessel plus the design flow volume of fire protection water calculated to discharge from the fire-extinguishing system over the minimum required system design area, or area of the room or area in which the storage is located, whichever is smaller, for a period of 20 minutes. [*5000*:34.3.2.8.3.7]

60.3.2.8.3.8 A monitoring method shall be provided to detect hazardous materials in the secondary containment system. [*5000*:34.3.2.8.3.8]

60.3.2.8.3.9 The monitoring method shall be permitted to be visual inspection of the primary or secondary containment, or other approved means. [*5000*:34.3.2.8.3.9]

60.3.2.8.3.10 Where secondary containment is subject to the intrusion of water, a monitoring method for detecting water shall be provided. [*5000*:34.3.2.8.3.10]

60.3.2.8.3.11 Where monitoring devices are provided, they shall be connected to distinct visual or audible alarms. [*5000*:34.3.2.8.3.11]

60.3.2.8.3.12 Where remote containment systems are provided, drainage systems shall be in accordance with the plumbing code, as referenced in Chapter 2, and the following provisions also shall be met:

(1) The slope of floors in indoor locations to drains or similar areas in outdoor locations shall be not less than 1 percent.
(2) Drains from indoor storage areas shall be sized to carry the volume of the fire protection water, as determined by the design density discharged from the automatic fire-extinguishing system over the minimum required system design area, or area of the room or area in which the storage is located, whichever is smaller.
(3) Materials of construction for drainage systems shall be compatible with the materials stored.
(4) Separate drainage systems shall be provided to avoid mixing incompatible materials where such materials are present in an open-use condition.
(5) Drains shall terminate in an approved location away from buildings, valves, means of egress, fire access roadways, adjoining property, and storm drains. [*5000*:34.3.2.8.3.12]

60.3.2.9 Floors in Storage Rooms. Floors in storage areas for organic peroxides, oxidizers, pyrophoric materials, unstable (reactive) materials, water-reactive solids and liquids, corrosive materials, and toxic and highly toxic materials shall be of liquid-tight, noncombustible construction. [*5000*:34.3.2.9]

60.3.2.10 Containment Pallets. Where used as a substitute for spill control and secondary containment for outdoor storage in accordance with 60.3.2.8.1, containment pallets shall comply with the following:

(1) A liquidtight sump accessible for visual inspection shall be provided.
(2) The sump shall be designed to contain not less than 66 gal (249.8 L).
(3) Exposed surfaces shall be compatible with the material stored.
(4) Containment pallets shall be protected to prevent collection of rainwater within the sump. [*5000*:34.3.2.10]

60.3.2.11 Unprotected Vertical Openings.

60.3.2.11.1 In industrial occupancies required to comply with 60.3.3, where unprotected vertical openings exist and are necessary to manufacturing operations, such openings shall be permitted beyond the specified limits in the building code. [*5000*:34.3.2.10.1]

60.3.2.11.2 The unprotected vertical openings described in 60.3.2.11.1 shall be permitted only where every floor level has direct access to one or more enclosed stairs or other exits protected against obstruction by any fire or smoke in the open areas connected by the unprotected vertical openings. [*5000*:34.3.2.10.2]

60.3.3 Protection Level 1.

60.3.3.1 General. Buildings, or portions thereof, required to comply with Protection Level 1 shall comply with 60.3.2, 60.3.3.2, and the building code. [*5000*:34.3.3.1]

60.3.3.2 Detached Building Required.

60.3.3.2.1 Buildings required to comply with Protection Level 1 shall be used for no other purpose, shall not exceed one story in height, and shall be without basements, crawl spaces, or other under-floor spaces. [*5000*:34.3.3.2.1]

60.3.3.2.2 Roofs of buildings described in 60.3.3.2.1 shall be of lightweight construction with suitable thermal insulation to prevent sensitive material from reaching its decomposition temperature. [*5000*:34.3.3.2.2]

60.3.3.2.3 Buildings required to comply with both Protection Level 1 and Protection Level 4 shall comply with the most restrictive requirements for both protection levels. [*5000*:34.3.3.2.3]

60.3.4 Supervision of Alarm, Detection, and Automatic Fire-Extinguishing Systems. Alarm, detection, and automatic fire-extinguishing systems required by Chapter 60 or other chapters of this *Code* regulating hazardous materials shall be supervised by an approved central, proprietary, or remote station service or shall initiate an audible and visual signal at a constantly attended on-site location.

60.4 Supplemental Requirements for Use and Handling of Hazardous Materials in Amounts Exceeding Maximum Allowable Quantities.

60.4.1* General. Where the aggregate quantity of hazardous materials used or handled exceeds the maximum allowable quantity permitted in control areas set forth in Section 60.2, Section 60.1 through Section 60.4 shall apply, except as specified in 60.4.1.1. Where the aggregate quantity of hazardous materials used or handled does not exceed the maximum allowable quantity permitted in control areas set forth in Section 60.2, Section 60.4 shall not apply.

60.4.1.1* Uses Not Required to Comply. The following use conditions shall not be required to comply with Section 60.4:

(1) Corrosives used in stationary lead–acid battery systems used for standby power, emergency power, or uninterrupted power supply complying with Chapter 52.
(2) Application and release of pesticide products and materials intended for use in weed abatement, erosion control, soil amendment or similar applications, where applied in accordance with the manufacturer's instructions and label directions.

60.4.2 Ventilation.

60.4.2.1 General. Indoor dispensing and use areas shall be provided with exhaust ventilation in accordance with 60.3.2.5.

60.4.2.2 Exceptions to Ventilation Requirement. Exhaust ventilation required by 60.4.2.1 shall not be required for dispensing and use of flammable solids other than those with finely divided particles.

60.4.3 Standby and Emergency Power. Standby or emergency power shall be provided in accordance with 60.3.2.7.

60.4.4 Limit Controls.

60.4.4.1 General. Limit controls shall be provided in accordance with 60.4.4 through 60.4.4.4.

60.4.4.2 Temperature. Process tanks and equipment, which involve temperature control of the material to prevent a hazardous reaction shall be provided with limit controls to maintain the temperature within a safe range.

60.4.4.3 Pressure Control.

60.4.4.3.1 Stationary tanks and equipment containing hazardous materials liquids that can generate pressure exceeding design limits due to exposure fires or internal reaction shall have a form of construction or other approved means that relieves excessive internal pressure.

60.4.4.3.2 The means of pressure relief shall vent to an approved location or to an exhaust scrubber or treatment system where required by NFPA 55.

60.4.4.4 Liquid Level.

60.4.4.4.1 High Level. Open tanks in which hazardous materials are used shall be equipped with a liquid level limit control or other means to prevent overfilling of the tank.

60.4.4.4.2 Low Level. Open tanks and containers in which hazardous materials are heated shall be equipped with approved automatic shutoff controls, which will sense low liquid levels and shut off the source of heat.

60.4.5 Supervision of Alarm, Detection, and Automatic Fire-Extinguishing Systems. Supervision of alarm, detection and extinguishing systems shall be provided in accordance with 60.3.4.

60.4.6 Lighting. Lighting by natural or artificial means shall be provided, and artificial lighting, where provided, shall be in accordance with nationally recognized standards.

60.4.7 Floor Construction. Except for surfacing, floors of areas where liquid or solid hazardous materials are dispensed or used in open systems shall be of noncombustible, liquidtight construction.

60.4.8 System Design.

60.4.8.1 Systems shall be suitable for the use intended and shall be designed by persons competent in such design.

60.4.8.2 Where nationally recognized good practices or standards have been established for the processes employed, they shall be followed in the design.

60.4.8.3 Controls shall be designed to prevent materials from entering or leaving process or reaction systems at other than the intended time, rate, or path.

60.4.8.4 Where automatic controls are provided, they shall be designed to be fail-safe.

60.4.9 Liquid Transfer.

60.4.9.1 Approved containers shall be used where liquids are dispensed from containers.

60.4.9.2 Liquids having a hazard ranking of 3 when exceeding 5.3 gal (20 L), or liquids having a hazard ranking of 4 when exceeding 1.1 gal (4 L), shall be transferred by one of the following methods:

(1) From safety cans
(2) Through an approved closed-piping system
(3) From containers or tanks by an approved pump taking suction through an opening in the top of the container or tank
(4) For other than highly toxic liquids, from containers or tanks by gravity through an approved self-closing or automatic-closing valve where the container or tank and dispensing operations are provided with spill control and secondary containment complying with 60.3.2.8 through 60.3.2.10.
(5) By the use of approved engineered liquid transfer systems

60.4.10 Supplemental Regulations for Indoor Dispensing and Use.

60.4.10.1 Open Systems.

60.4.10.1.1 General. Dispensing and use of hazardous materials in open containers or systems in amounts exceeding the maximum allowable quantity limits for control areas specified in Section 60.2 shall be in accordance with 60.4.10.1.2 through 60.4.10.1.5.2.2.

60.4.10.1.2 Ventilation. Where liquids or solids having a hazard ranking of 3 or 4 in accordance with NFPA 704 are dispensed or used, mechanical exhaust ventilation shall be provided to capture fumes, mists, or vapors at the point of generation, unless such liquids or solids can be demonstrated as not creating harmful fumes, mists, or vapors.

60.4.10.1.3 Fire-Extinguishing System for Laboratory Fume Hoods and Spray Booths. In addition to the requirements of 60.3.2.1, laboratory fume hoods and spray booths where flammable materials are dispensed or used shall be protected by an automatic fire-extinguishing system.

60.4.10.1.4 Explosion Control. Explosion control shall be provided in accordance with 60.3.2.6 where an explosive environment can occur because of the characteristics or nature of the hazardous materials dispensed or used, or as a result of the dispensing or use process.

60.4.10.1.5 Spill Control and Secondary Containment for Hazardous Materials.

60.4.10.1.5.1 Spill Control for Hazardous Materials Liquids. Buildings or portions thereof used for either of the following shall be provided with spill control in accordance with 60.3.2.8.2 to prevent the flow of liquids to adjoining areas:

(1) Dispensing of hazardous materials liquids into vessels exceeding a 1.1 gal (4 L) capacity
(2) Open use of hazardous materials in vessels or systems exceeding a 5.3 gal (20 L) capacity

60.4.10.1.5.2 Secondary Containment for Hazardous Materials Liquids.

60.4.10.1.5.2.1 Where required by Table 60.4.10.1.5.2.1, buildings or portions thereof used for either of the following shall be provided with secondary containment in accordance with 60.3.2.8.3 through 60.3.2.8.3.12:

(1) Use-open of liquids where the capacity of an individual vessel or system exceeds 1.1 gal (4 L)
(2) Use-open of liquids where the capacity of multiple vessels or systems exceeds 5.3 gal (20 L)

Table 60.4.10.1.5.2.1 Required Secondary Containment — Hazardous Materials Liquids Use

Material	Class	Indoor Use	Outdoor Use
	Physical Hazard Materials		
Flammable and combustible liquids	Class I, II and III-A	Required	Comply with Chapter 66
Organic peroxide liquids	Detonatable	Required	Required
	Class I	Required	Required
	Class II	Required	Required
	Class III	Required	Required
	Class IV	Required	Required
Oxidizer liquids	Class 4	Required	Required
	Class 3	Required	Required
	Class 2	Required	Required
Pyrophoric liquids		Required	Required
Unstable (reactive) liquids	Class 4	Required	Required
	Class 3	Required	Required
	Class 2	Required	Required
	Class 1	Not Required	Required
Water reactive liquids	Class 3	Required	Required
	Class 2	Required	Required
	Class 1	Not Required	Required
	Health Hazard Materials		
Corrosive liquids		Required	Required
Highly toxic liquids		Required	Required
Toxic liquids		Required	Required

60.4.10.1.5.2.2 Buildings or portions thereof containing only hazardous materials in listed secondary containment tanks or systems shall not be required to be provided with secondary containment.

60.4.10.2 Closed Systems.

60.4.10.2.1 General. Dispensing and use of hazardous materials in closed containers or systems in amounts exceeding the maximum allowable quantity limits for control areas specified in Section 60.2 shall be in accordance with 60.4.10.2 through 60.4.10.2.5.2.

60.4.10.2.2 Ventilation. If closed systems are designed to be opened as part of normal operations, ventilation shall be provided in accordance with 60.4.10.1.2.

60.4.10.2.3 Fire-Extinguishing System for Laboratory Fume Hoods and Spray Booths. In addition to the requirements of 60.3.2.1, laboratory fume hoods and spray booths where flammable materials are dispensed or used shall be protected by an automatic fire-extinguishing system.

60.4.10.2.4 Explosion Control.

60.4.10.2.4.1 Explosion control shall be provided in accordance with 60.3.2.6 where an explosive environment can occur because of the characteristics or nature of the hazardous materials dispensed or used, or as a result of the dispensing or use process, unless process vessels comply with 60.4.10.2.4.2.

60.4.10.2.4.2 Where process vessels are designed to fully contain the worst case explosion anticipated within the vessel under process conditions considering the most likely failure, additional explosion control shall not be required.

60.4.10.2.5 Spill Control and Secondary Containment for Hazardous Materials Liquids.

60.4.10.2.5.1 Spill Control for Hazardous Materials Liquids. Buildings or portions thereof where hazardous materials liquids are used in individual closed vessels exceeding a 55 gal (208.2 L) capacity shall be provided with spill control in accordance with 60.3.2.8.2 through 60.3.2.8.2.4 to prevent the flow of liquids to adjoining areas.

60.4.10.2.5.2 Secondary Containment for Hazardous Materials Liquids. Where required by Table 60.4.10.1.5.2.1, buildings or portions thereof used for either of the following shall be provided with secondary containment in accordance with 60.3.2.8.3 through 60.3.2.8.3.12:

(1) Use-closed capacity of an individual vessel or system exceeds 55 gal (208 L)

(2) Use-closed aggregate capacity of multiple vessels or systems exceeds 1000 gal (3785 L)

60.4.11 Supplemental Regulations for Outdoor Dispensing and Use.

60.4.11.1 Open Systems.

60.4.11.1.1 Spill Control and Secondary Containment for Hazardous Materials Liquids.

60.4.11.1.1.1 Spill Control for Hazardous Materials Liquids. Outdoor areas used for either of the following shall be provided with spill control in accordance with 60.3.2.8.2 through 60.3.2.8.2.4 to prevent the flow of liquids to adjoining areas:

(1) Dispensing of hazardous materials liquids into vessels exceeding a 1.1 gal (4 L) capacity

(2) Open use of hazardous materials in vessels or systems exceeding a 5.3 gal (20 L) capacity

60.4.11.1.1.2 Secondary Containment for Hazardous Materials Liquids. Where required by Table 60.4.10.1.5.2.1, outdoor areas used for either of the following shall be provided with secondary containment in accordance with 60.3.2.8.3 through 60.3.2.8.3.12:

(1) Use-open of liquids where the capacity of an individual vessel or system exceeds 1.1 gal (4 L)

(2) Use-open of liquids where the capacity of multiple vessels or systems exceeds 5.3 gal (20 L)

60.4.11.1.2 Location. Outdoor dispensing and use areas shall be located as required for outdoor storage of hazardous materials in quantities exceeding the maximum allowable quantity permitted in control areas.

60.4.11.1.3 Clearance from Combustibles. The area surrounding an outdoor dispensing or use area shall be kept clear of combustible materials and vegetation for a minimum distance of 30 ft (9.1 m).

60.4.11.2 Closed Systems.

60.4.11.2.1 Spill Control and Secondary Containment for Hazardous Materials Liquids.

60.4.11.2.1.1 Spill Control for Hazardous Materials Liquids. Outdoor areas where hazardous materials liquids are used in individual closed vessels exceeding a 55 gal (208 L) capacity shall be provided with spill control in accordance with 60.3.2.8.2 through 60.3.2.8.2.4 to prevent the flow of liquids to adjoining areas.

60.4.11.2.1.2 Secondary Containment for Hazardous Materials Liquids. Where required by Table 60.4.10.1.5.2.1, outdoor areas used for either of the following shall be provided with secondary containment in accordance with 60.3.2.8.3 through 60.3.2.8.3.12:

(1) Use-closed capacity of an individual vessel or system exceeds 55 gal (208 L)

(2) Use-closed aggregate capacity of multiple vessels or systems exceeds 1000 gal (3785 L)

60.4.11.2.2 Location. Outdoor dispensing and use areas shall be located as required for outdoor storage of hazardous materials in quantities exceeding the maximum allowable quantity permitted in control areas.

60.4.11.2.3 Clearance from Combustibles. The area surrounding an outdoor dispensing or use area shall be kept clear of combustible materials and vegetation for a minimum distance of 30 ft (9.1 m).

60.4.12 Supplemental Regulations for Handling.

60.4.12.1 Location of Outdoor Handling Areas. Outdoor handling areas shall be located as required for outdoor storage of hazardous materials in quantities exceeding the maximum allowable quantity permitted in control areas.

60.4.12.2 Emergency Alarm for Transportation of Hazardous Materials in Corridors or Exit Enclosures. When hazardous materials having a hazard ranking of 3 or 4 in accordance with NFPA 704 are transported through corridors or exit enclosures, there shall be an emergency telephone system, a local manual alarm station, or an approved alarm-initiating device at not more than 150 ft (46 m) intervals and at each exit throughout the transport route. The signal shall be relayed to an approved central, proprietary, or remote station service or constantly attended on-site location and shall also initiate a local audible alarm.

Chapter 61 Aerosol Products

61.1 General Provisions.

61.1.1 Application.

61.1.1.1* The manufacture, storage, use, handling, and display of aerosol products shall comply with the requirements of Chapter 61; NFPA 30B, *Code for the Manufacture and Storage of Aerosol Products*; and Section 60.1 and Section 60.2 of this *Code*.

61.1.1.2 Where the provisions of Chapter 61 or NFPA 30B conflict with the provisions of Chapter 60, the provisions of Chapter 61 and NFPA 30B shall apply.

61.1.1.3* Chapter 61 shall not apply to the manufacture, storage, and display of aerosol products that contain only a nonflammable base product and a nonflammable propellant. [**30B**:1.1.2]

61.1.1.4* Chapter 61 shall not apply to the storage and display of containers whose contents are comprised entirely of LP-Gas products. [**30B**:1.1.3]

61.1.1.5 Chapter 61 shall not apply to post-consumer processing of aerosol containers. [**30B**:1.1.4]

61.1.2 Permits. Permits, where required, shall comply with Section 1.12.

61.2* Classification of Aerosol Products. Aerosol products shall be classified by means of the calculation of their chemical or theoretical heats of combustion and shall be designated Level 1, Level 2, or Level 3 in accordance with 61.2.1 through 61.2.3 and Table 61.2. [**30B**:1.7.1]

61.2.1 Level 1 Aerosol Products. Level 1 aerosol products are those with a total chemical heat of combustion that is less than or equal to 8600 Btu/lb (20 kJ/g). [**30B**:1.7.2]

61.2.2 Level 2 Aerosol Products. Level 2 aerosol products are those with a total chemical heat of combustion that is greater than 8600 Btu/lb (20 kJ/g), but less than or equal to 13,000 Btu/lb (30 kJ/g). [**30B**:1.7.3]

61.2.3 Level 3 Aerosol Products. Level 3 aerosol products are those with a total chemical heat of combustion that is greater than 13,000 Btu/lb (30 kJ/g). [**30B**:1.7.4]

Table 61.2 Aerosol Classification

If the Chemical Heat of Combustion Is		Aerosol Classification Level
>	≤	
0	8,600 Btu/lb (20 kJ/g)	1
8,600 Btu/lb (20 kJ/g)	13,000 Btu/lb (30 kJ/g)	2
13,000 Btu/lb (30 kJ/g)	—	3

[**30B**:Table 1.7.1]

61.3 Marking of Packages of Aerosol Products. Manufacturers of aerosol products shall ensure that all cartons or packages of aerosol products are identified on at least one side with the classification of the aerosol products contained therein, in accordance with Section 61.2. [**30B**:1.8.1]

61.4 Basic Requirements.

61.4.1 Site Requirements. Distances between buildings used for the manufacture or storage of aerosol products and adjacent buildings or property lines that are or can be built upon shall be based on sound engineering principles. [**30B**:4.1]

61.4.2 Building Construction.

61.4.2.1 Openings in fire walls or fire barriers shall be kept to a minimum. [**30B**:4.2.1]

61.4.2.1.1 All openings (i.e., personnel doorways, ductwork, conveyor line, etc.) shall be protected with automatic-closing or self-closing fire doors or dampers. [**30B**:4.2.1.1]

61.4.2.1.2 Fire doors shall be installed in accordance with NFPA 80, *Standard for Fire Doors and Fire Windows*. [**30B**:4.2.1.2]

61.4.2.1.3 Fire dampers shall be installed in accordance with manufacturer's instructions and NFPA 90A, *Standard for the Installation of Air-Conditioning and Ventilating Systems*. [**30B**:4.2.1.3]

61.4.2.2 Means of egress shall comply with applicable provisions of NFPA *101*. [**30B**:4.2.2.1]

61.4.2.3 The design and construction of conveyor lines and other physical obstacles, such as in the flammable propellant charging and pump rooms, shall not allow entrapment of personnel and shall provide for direct access to exits. [**30B**:4.2.2.2]

61.4.3 Electrical Installations.

61.4.3.1 All electrical equipment and wiring, including heating equipment, shall be installed in accordance with NFPA 70. [**30B**:4.3.1]

61.4.3.1.1 Electrical equipment and wiring in areas where flammable liquids or flammable gases are handled shall meet the additional requirements of Articles 500 and 501 of NFPA 70. [**30B**:4.3.1.1]

61.4.3.2 Aerosol product storage and display areas shall be considered unclassified for purposes of electrical installation. [**30B**:4.3.2]

61.4.4 Heating Equipment. Heating equipment shall be installed in accordance with the applicable requirements of the following:

(1) NFPA 31, *Standard for the Installation of Oil-Burning Equipment*
(2) NFPA 54, *National Fuel Gas Code*
(3) NFPA 58, *Liquefied Petroleum Gas Code*
(4) NFPA 85, *Boiler and Combustion Systems Hazards Code* [**30B:**4.4]

61.4.5 Flammable Liquids and Gases. Areas in which flammable liquids and flammable gases are handled or stored shall meet the applicable requirements of the following:

(1) NFPA 30, *Flammable and Combustible Liquids Code*
(2) NFPA 58, *Liquefied Petroleum Gas Code* [**30B:**4.5]

61.4.6 Fire Protection.

61.4.6.1 Automatic Sprinkler Systems. Installations of automatic sprinklers, where required by this *Code* and NFPA 30B shall be installed in accordance with NFPA 13, *Standard for the Installation of Sprinkler Systems,* and the provisions of NFPA 30B. [**30B:**4.6.1]

61.4.6.2 Standpipe and Hose System. Installations of standpipe and hose systems, where required by NFPA 30B, shall be designed and installed in accordance with NFPA 14 and with the provisions of NFPA 30B. Only combination or spray hose nozzles shall be used. [**30B:**4.6.2]

61.4.6.3 Portable Fire Extinguishers. Fire extinguishers shall be provided in accordance with NFPA 10. [**30B:**4.6.3]

61.4.6.4 Water Supplies.

61.4.6.4.1 In addition to the water supply requirements for automatic sprinkler systems, a minimum requirement for hose stream supply for combined inside and outside hose streams shall be provided in accordance with one of the following:

(1) 500 gpm (1900 L/min) for buildings protected with spray and/or large drop sprinkler protection
(2) 250 gpm (950 L/min) for buildings protected with ESFR sprinkler protection
(3) 1000 gpm (3800 L/min) for buildings without automatic sprinkler protection [**30B:**4.6.4.1]

61.4.6.4.1.1 The water supply shall be sufficient to provide the required hose stream demand for a minimum duration of 2 hours. [**30B:**4.6.4.1.1]

61.4.6.4.1.2 The water supply system shall be designed and installed in accordance with NFPA 24, *Standard for the Installation of Private Fire Service Mains and Their Appurtenances.* [**30B:**4.6.4.1.2]

61.4.6.4.1.3 The water supply requirements shall be permitted as modified by the provisions of NFPA 30B. [**30B:**4.6.4.1.3]

61.4.6.4.2 Installations of fire pumps and tanks that are needed to supply the required fire protection water shall be installed in accordance with NFPA 20, *Standard for the Installation of Stationary Pumps for Fire Protection,* and NFPA 22, *Standard for Water Tanks for Private Fire Protection.* [**30B:**4.6.4.2]

61.4.6.5 Fire Alarms. Fire alarm systems shall be installed in aerosol storage facilities where required by NFPA 30B.

61.4.6.6 Sources of Ignition.

61.4.6.6.1 In areas where flammable gases or flammable vapors might be present, precautions shall be taken to prevent ignition by eliminating or controlling sources of ignition. [**30B:**4.8.1]

61.4.6.6.2 Sources of ignition include, but are not limited to, the following:

(1) Open flames
(2) Lightning
(3) Hot surfaces
(4) Radiant heat
(5) Smoking
(6) Cutting and welding
(7) Spontaneous ignition
(8) Frictional heat or sparks
(9) Static electricity
(10) Electrical arcs and sparks
(11) Stray currents
(12) Ovens, furnaces, and other heating equipment
(13) Automotive vehicles
(14) Material-handling equipment [**30B:**4.8.2]

61.5 Storage in Warehouses and Storage Areas.

61.5.1 Basic Requirements.

61.5.1.1 All outer packaging including cartons, trays, shrouds, or other packaging of aerosol products shall be identified on at least one side with the classification of the aerosol products in accordance with Section 61.2 and marked as follows: **Level _____ Aerosols** [**30B:**6.1.1]

61.5.1.2* Fire retardant cartons shall not be considered an acceptable alternative to the protection requirements of Chapter 6 of NFPA 30B. [**30B:**6.1.2]

61.5.2* Storage of Level 1 Aerosol Products.

61.5.2.1 Level 1 aerosol products shall be considered equivalent to Class III commodities, as defined in NFPA 13. [**30B:**6.2.1]

61.5.2.2 In cases where the storage of Level 1 aerosol products is required to be protected, such storage shall be protected in accordance with the requirements set forth in NFPA 13. [**30B:**6.2.2]

61.5.3 Storage of Level 2 and Level 3 Aerosol Products.

61.5.3.1 The storage of Level 2 and Level 3 aerosol products shall be in accordance with 61.5.3 through 61.5.3.2.3. [**30B:**6.3.1]

61.5.3.1.1 Level 2 aerosol products in containers whose net weight is less than 1 oz (28 g) shall be considered to be equivalent to cartoned unexpanded Group A plastics, as defined in NFPA 13. [**30B:**6.3.1.1]

61.5.3.1.1.1 In cases where the storage of Level 2 aerosol products in containers whose net weight is less than 28 g (1 oz) is required to be protected, such storage shall be in accordance with the requirements set forth in NFPA 13 for cartoned unexpanded Group A plastics. [**30B:**6.3.1.1.1]

61.5.3.2 Fire Protection — Basic Requirements.

61.5.3.2.1 Storage of Level 2 and Level 3 aerosol products shall not be permitted in basement areas of warehouses. [**30B:**6.3.2.1]

61.5.3.2.1.1 Storage of Level 2 and Level 3 shall be permitted as provided for in 6.3.3 of NFPA 30B. [**30B:**6.3.2.1.1]

61.5.3.2.2 Encapsulated storage of Level 2 and Level 3 aerosol products shall not be permitted. [**30B:**6.3.2.2]

61.5.3.2.2.1 Stretch-wrapping of cartons of aerosol products shall be permitted. [**30B:**6.3.2.2.1]

61.5.3.2.2.2 Encapsulated storage of uncartoned Level 2 and Level 3 aerosol products on slip sheets or in trays shall be permitted. [30B:6.3.2.2.2]

61.5.3.2.3 Level 2 and 3 aerosol products whose containers are designed to vent at gauge pressures of less than 210 psig (1450 kPa) shall not be stored. [30B:6.3.2.3]

61.6 Mercantile Occupancies.

61.6.1 Sales Display Areas — Aerosol Storage Not Exceeding 8 ft (2.4 m) High.

61.6.1.1 Level 1 aerosol products in sales display areas shall not be limited. [30B:7.1.1]

61.6.1.2 Level 2 and Level 3 aerosol products shall be removed from combustible cartons, or the cartons shall be display-cut, when located in sales display areas. [30B:7.1.2]

61.6.1.2.1 Cartoned display of Level 2 and Level 3 aerosol products shall be permitted provided the area is protected in accordance with Table 6.3.2.7(a) through Table 6.3.2.7(l) of NFPA 30B. [30B:7.1.2.1]

61.6.1.3 Level 2 and Level 3 aerosol products in sales display areas shall not exceed the maximum quantities given in 61.6.1.3.1 and 61.6.1.3.2 according to the protection provided. [30B:7.1.3]

61.6.1.3.1 In sales display areas that are unsprinklered or whose sprinkler system does not meet the requirements of 61.6.1.3.2, the total aggregate quantity of Level 2 and Level 3 aerosol products shall not exceed 2 lb/ft^2 (9.8 kg/m^2) of total sales display area, up to the quantities specified in Table 61.6.1.3.1. [30B:7.1.3.1]

Table 61.6.1.3.1 Maximum Quantity per Floor

	Max. Net Weight per Floor	
Floor	lb	kg
Basement	Not Permitted	
Ground	2500	1135
Upper	500	227

[30B:Table 7.1.3.1]

61.6.1.3.1.1 No single 10 ft × 10 ft (3 m × 3 m) section of sales display area shall contain an aggregate quantity of more than 1000 lb (454 kg) net weight of Level 2 and Level 3 aerosol products. [30B:7.1.3.1.1]

61.6.1.3.2 In sales display areas that are sprinklered in accordance with NFPA 13, for at least Ordinary Hazard (Group 2) occupancies, the total aggregate quantity of Level 2 and Level 3 aerosol products shall not exceed 2 lb/ft^2 (9.8 kg/m^2) of total sales display area. [30B:7.1.3.2]

61.6.1.3.2.1 No single 10 ft × 10 ft (3 m × 3 m) section of sales display area shall contain an aggregate quantity of more than 1000 lb (454 kg) net weight of Level 2 and Level 3 aerosol products. [30B:7.1.3.2.1]

61.6.1.4 Level 2 and Level 3 aerosol products shall be securely stacked to not more than 6 ft (1.8 m) high from base to top of the storage array unless on fixed shelving. [30B:7.1.4]

61.6.1.4.1 Shelving shall be of stable construction and storage shall not exceed 8 ft (2.4 m) in height. [30B:7.1.4.1]

61.6.2 Sales Display Areas — Aerosol Storage Exceeding 8 ft (2.4 m) High.

61.6.2.1 Storage and display of Level 1 aerosol products in sales display areas shall not be limited. [30B:7.2.1]

61.6.2.2 Uncartoned or display-cut (case cut) Level 2 and 3 aerosol products that are stored for display no more than 6 ft (1.8 m) above the floor shall be permitted. [30B:7.2.2]

61.6.2.2.1 Protection shall be installed in accordance with 61.6.2.3.1 based on the highest level of aerosol product in the array and the packaging method of the storage above 6 ft (1.8 m). [30B:7.2.2.1]

61.6.2.3 Protection.

61.6.2.3.1 The storage and display of Level 2 and Level 3 aerosol products shall be protected in accordance with Table 6.3.2.7(a) through Table 6.3.2.7(l) of NFPA 30B, whichever is applicable. [30B:7.2.3.1]

61.6.2.3.1.1 Where in-rack sprinklers are required by Table 6.3.2.7(e) of NFPA 30B and where the Level 2 and Level 3 aerosol products are stored for display below the 6 ft (1.8 m) level, the first tier of in-rack sprinklers shall be installed above the display, but no more than 6 ft (1.8 m) above the floor level. [30B:7.2.3.1.1]

61.6.2.3.2 Noncombustible draft curtains shall extend down a minimum of 2 ft (0.61 m) from the ceiling and shall be installed at the interface between ordinary and high-temperature sprinklers. [30B:7.2.3.2]

61.6.2.4 Storage and display of Level 2 and Level 3 aerosol products shall not exceed 10,000 lb (4540 kg) net weight within any 25,000 ft^2 (2323 m^2) of sales display area. [30B:7.2.4]

61.6.2.4.1 Level 2 and Level 3 aerosol product display areas shall be separated from each other by a minimum of 25 ft (7.6 m). [30B:7.2.4.1]

61.6.2.5 The area of the design for the required ceiling sprinkler system shall extend 20 ft (6 m) beyond the Level 2 and Level 3 aerosol display and storage area. [30B:7.2.5]

61.6.2.6 Storage and display of Level 2 and Level 3 aerosol products shall be separated from the storage of flammable and combustible liquids by a minimum distance of 25 ft (7.6 m) or by a segregating wall or noncombustible barrier. [30B:7.2.6]

61.6.2.6.1 Where Level 2 and Level 3 aerosol products are stored within 25 ft (7.6 m) of flammable and combustible liquids, beneath the noncombustible barrier shall be liquidtight at the floor to prevent spilled liquids from flowing beneath the aerosol products. [30B:7.2.6.1]

61.6.2.7 The sales display area shall meet the requirements for mercantile occupancies in NFPA *101*. [30B:7.2.7]

61.6.3 Back Stock Storage Areas.

61.6.3.1 Where back stock areas are separated from sales display areas by construction having a minimum 1-hour fire-resistance rating, storage of Level 2 and Level 3 aerosol products shall meet the requirements of Chapter 6 of NFPA 30B. [30B:7.3.1]

61.6.3.2 Where back stock areas are not separated from sales display areas by construction having a minimum 1-hour fire-resistance rating, the quantity of Level 2 and Level 3 aerosol products in back stock areas shall be included in the total allowable quantities specified in 61.6.1.3 or 61.6.2.4. [**30B:**7.3.2]

61.6.3.2.1 Protection shall be provided in accordance with 61.6.3.1. [**30B:**7.3.2.1]

61.6.3.3 An additional quantity of Level 2 and Level 3 aerosol products, up to a maximum of 500 lb (227 kg) net weight, shall be permitted in back stock areas, where the additional quantities are stored in flammable liquid storage cabinets that meet the requirements of Section 6.3 of NFPA 30. [**30B:**7.3.3]

61.6.3.4 Storage of Level 2 and Level 3 aerosol products in separate, inside flammable liquids storage rooms shall meet the requirements of 6.3.7 of NFPA 30B. [**30B:**7.3.4]

61.7 Operations and Maintenance.

61.7.1 Means of Egress. Means of egress and exits shall be maintained in accordance with NFPA *101*. [**30B:**8.1]

61.7.2 Powered Industrial Trucks.

61.7.2.1 The use and selection of powered industrial trucks shall comply with Section 10.18. [**30B:**8.2.1]

61.7.2.2 Only trained and authorized operators shall be allowed to operate powered industrial trucks. [**30B:**8.2.2]

61.7.2.3 Operator training shall be equivalent to that specified by ANSI/ASME B56.1, *Safety Standard for Low-Lift and High-Lift Trucks*. [**30B:**8.2.3]

61.7.2.4 Loads.

61.7.2.4.1 If the type of load handled presents a hazard of backward falls, the powered industrial truck shall be equipped with a vertical load backrest extension. [**30B:**8.2.4.1]

61.7.2.4.2 For loads that are elevated above the mast of the truck, the backrest extension shall reach at least halfway into the uppermost pallet load. [**30B:**8.2.4.2]

61.7.3 Control of Ignition Sources.

61.7.3.1 Sources of Ignition. In areas where flammable gases or flammable vapors might be present, precautions shall be taken to prevent ignition by eliminating or controlling sources of ignition. Sources of ignition include, but are not limited to, the following:

(1) Open flames
(2) Lightning
(3) Hot surfaces
(4) Radiant heat
(5) Smoking
(6) Cutting and welding
(7) Spontaneous ignition
(8) Frictional heat or sparks
(9) Static electricity
(10) Electrical arcs and sparks
(11) Stray currents
(12) Ovens, furnaces, and other heating equipment
(13) Automotive vehicles
(14) Material-handling equipment [**30B:**8.3.1.1]

61.7.3.2 Smoking shall be strictly prohibited, except in designated smoking areas. [**30B:**8.3.2]

61.7.3.3* Welding, cutting, and similar spark-producing operations shall not be permitted in areas that contain aerosol products until a written permit authorizing the work has been issued. [**30B:**8.3.3]

61.7.3.3.1 The permit shall be issued by a person in authority following an inspection of the area to assure that proper precautions have been taken and will be followed until completion of the work. [**30B:**8.3.3.1]

61.7.4 Aisles. Storage in aisles shall be prohibited so as to permit access for fire fighting, salvage, and removal of stored commodities. [**30B:**8.4]

61.7.5 Waste Disposal.

61.7.5.1 Filled or partly filled aerosol containers shall be separated from all other rubbish and trash. [**30B:**8.5.1]

61.7.5.1.1 Filled or partly filled aerosol containers shall be placed in noncombustible waste containers. [**30B:**8.5.1.1]

61.7.5.2 Filled or partly filled aerosol containers shall not be disposed of in compactors, balers, or incinerators that crush the container or heat its contents. [**30B:**8.5.2]

61.7.5.2.1 Equipment and facilities that are specifically designed for the disposal of aerosol containers shall be permitted to dispose of filled or partly filled aerosol containers. [**30B:**8.5.2.1]

61.7.6 Inspection and Maintenance.

61.7.6.1 A written and documented preventive maintenance program shall be developed for equipment, machinery, and processes that are critical to fire-safe operation of the facility. [**30B:**8.6.1]

61.7.6.2 Critical detection systems and their components, emergency trips and interlocks, alarms, and safety shutdown systems shall be inspected on a regularly scheduled basis, and any deficiencies shall be immediately corrected. [**30B:**8.6.2]

61.7.6.2.1 Items in this inspection schedule include, but are not limited to, the following:

(1) Gas detection systems
(2) Deflagration suppression systems
(3) Deflagration vent systems
(4) Ventilation and local exhaust systems
(5) Propellant charging room door interlocks
(6) Process safety devices
(7) Fire alarm systems [**30B:**8.6.2.1]

61.7.7* Static Electricity. All process equipment and piping involved in the transfer of flammable liquids or gases shall be connected to a static-dissipating earth ground system to prevent accumulations of static charge. [**30B:**8.7]

Chapter 62 Reserved

Chapter 63 Compressed Gases and Cryogenic Fluids

63.1 General Provisions.

63.1.1 Application.

63.1.1.1* The installation, storage, use, and handling of compressed gases and cryogenic fluids shall comply with the requirements of Chapter 63; NFPA 55, *Standard for the Storage, Use, and Handling of Compressed Gases and Cryogenic Fluids in Portable and Stationary Containers, Cylinders, and Tanks*; and Sections 60.1 and 60.2 of this *Code*.

63.1.1.2 Where the provisions of Chapter 63 or NFPA 55 conflict with the provisions of Chapter 60, the provisions of Chapter 63 and NFPA 55 shall apply.

63.1.1.3 Exemptions. NFPA 55 shall not apply to the following:

(1) *Off-site transportation of materials covered by NFPA 55
(2) Storage, use, and handling of radioactive gases in accordance with NFPA 801, *Standard for Fire Protection for Facilities Handling Radioactive Materials*
(3) Storage, use, and handling of medical compressed gases at health care facilities in accordance with NFPA 99, *Standard for Health Care Facilities*
(4) *Except for Chapter 9 of NFPA 55, storage, use, and handling of bulk oxygen in medical gas systems at health care facilities
(5) Systems consisting of cylinders of oxygen and cylinders of fuel gas used for welding and cutting in accordance with NFPA 51, *Standard for the Design and Installation of Oxygen–Fuel Gas Systems for Welding, Cutting, and Allied Processes*
(6) Acetylene cylinders in acetylene cylinder charging plants in accordance with NFPA 51A, *Standard for Acetylene Cylinder Charging Plants*
(7) Ethylene oxide containers stored, handled, or used for sterilization and fumigation in accordance with NFPA 560, *Standard for the Storage, Handling, and Use of Ethylene Oxide for Sterilization and Fumigation*
(8) *Flammable gases used as a vehicle fuel when stored on a vehicle
(9) *Storage, use, and handling of liquefied and nonliquefied compressed gases in laboratory work areas that are in accordance with NFPA 45, *Standard on Fire Protection for Laboratories Using Chemicals*
(10) Storage, use, and handling of liquefied petroleum gases in accordance with NFPA 58, *Liquefied Petroleum Gas Code*
(11) Storage, use, and handling of gases within closed-cycle refrigeration systems complying with the mechanical code
(12) Liquefied natural gas (LNG) storage at utility plants under NFPA 59A, *Standard for the Production, Storage, and Handling of Liquefied Natural Gas (LNG)*
(13) LNG handled as a vehicle fuel under NFPA 52, *Vehicular Fuel Systems Code*
(14) Compressed natural gas (CNG) handled as a vehicle fuel under NFPA 52 [55:1.1.2]

63.1.2 Permits. Permits, where required, shall comply with Section 1.12.

63.1.2.1 The permit applicant shall apply for approval to close storage, use, or handling facilities at least 30 days prior to the termination of the storage, use, or handling of compressed or liquefied gases.

63.1.2.2 Such application shall include any change or alteration of the facility closure plan filed pursuant to 60.1.2.4.3.

63.1.2.3 This 30-day period shall be permitted to be waived by the AHJ if there are special circumstances requiring such waiver.

Exception No. 1: Routine maintenance.

Exception No. 2: For repair work performed on an emergency basis, application for permit shall be made within two working days of commencement of work.

63.1.3 Hazardous Materials Classification.

63.1.3.1 Pure Gases. Hazardous materials shall be classified according to hazard categories as follows:

(1) Physical hazards, which shall include the following:
  (a) Flammable gas
  (b) Nonflammable gas
  (c) Oxidizing gas
  (d) Pyrophoric gas
  (e) Unstable reactive (detonable) gas, Class 3 or Class 4
  (f) Unstable reactive (nondetonable) gas, Class 2 or Class 3
(2) Health hazards, which shall include the following:
  (a) Corrosive gas
  (b) Cryogenic fluids
  (c) Highly toxic gas
  (d) Toxic gas
  (e) Irritant gas [55:5.1.1]

63.1.3.2 Other Hazards. Although it is possible that there are other known hazards, the classification of such gases is not within the scope of NFPA 55 and they shall be handled, stored, or used as an *other gas.* [55:5.1.2]

63.1.3.3 Mixtures. Mixtures shall be classified in accordance with the hazards of the mixture as a whole. [55:5.1.3]

63.1.3.4 Responsibility for Classification. Classification shall be performed by an approved organization, individual, or testing laboratory. [55:5.1.4]

63.1.3.4.1 Toxicity. The toxicity of gas mixtures shall be classified in accordance with CGA P-20, *Standard for the Classification of Toxic Gas Mixtures,* or by testing in accordance with the requirements of 29 CFR 1910.1000 or DOT 49 CFR 173 or ISO 10298, *Determination of toxicity of a gas or gas mixture.* [55:5.1.4.1]

63.1.3.4.2 Flammability of Gas Mixtures. For gas mixtures other than those containing ammonia and nonflammable gases, flammability of gas mixtures shall be classified in accordance with CGA P-23, *Standard for Categorizing Gas Mixtures Containing Flammable and Nonflammable Components,* or by physical testing in accordance with the requirements of ASTM E 681-01, *Standard Test Method for Concentration Limits of Flammability of Chemicals (Vapors and Gases),* or ISO 10156, *Gases and gas mixtures — Determination of fire potential and oxidizing ability for the selection of cylinder valve outlets.* [55:5.1.4.2]

63.2 Building-Related Controls.

63.2.1 General.

63.2.1.1 Occupancy. Occupancies containing compressed gases and cryogenic fluids shall comply with Section 63.2 in addition to other applicable requirements of NFPA 55. The occupancy of a building or structure, or portion of a building or structure, shall be classified in accordance with the building code. [55:6.1.1]

63.2.1.1.1 Quantities Less than or Equal to the MAQ. Building-related controls in areas with compressed gases or cryogenic fluids stored or used within an indoor control area in quantities less than or equal to those shown in Table 63.2.3.1 shall be in accordance with 6.3.1.3 and 6.3.1.4 and Sections 6.8, 6.12, 6.15, and 6.16 of NFPA 55. [55:6.1.1.1]

63.2.1.1.2 Quantities Greater than the MAQ. Building-related controls in areas with compressed gases or cryogenic fluids stored or used within an indoor control area in quantities greater than those shown in Table 63.2.3.1 shall be in accordance with the requirements of Chapter 6 of NFPA 55. [55:6.1.1.2]

63.2.2 Control Areas.

63.2.2.1 Construction Requirements. Control areas shall be separated from each other by not less than a 1-hour fire-resistive occupancy separation as required by the building code. [**55:**6.2.1]

63.2.2.2 Number. The number of control areas in buildings or portions of buildings shall not exceed that allowed by the building code. [**55:**6.2.2]

63.2.3 Occupancy Protection Levels.

63.2.3.1 Quantity Thresholds for Compressed Gases and Cryogenic Fluids Requiring Special Provisions. Where the quantities of compressed gases or cryogenic fluids stored or used within an indoor control area exceed those shown in Table 63.2.3.1, the area shall meet the requirements for Protection Level 1 through 5 in accordance with the building code, based on the requirements of 6.3.2 of NFPA 55. The aggregate quantity in use and storage shall not exceed the quantity listed for storage. [**55:**6.3.1]

63.2.3.1.1 Incompatible Materials. When the classification of materials in individual containers requires the area to be placed in more than one protection level, the separation of protection levels shall not be required providing the area is constructed to meet the requirements of the most restrictive protection level and that the incompatible materials are separated as required by 7.1.6.2 of NFPA 55. [**55:**6.3.1.1]

63.2.3.1.2 Multiple Hazards. Where a compressed gas or cryogenic fluid has multiple hazards, all hazards shall be addressed and controlled in accordance with the provisions for the protection level for which the threshold quantity is exceeded. [**55:**6.3.1.2]

63.2.3.1.3 Flammable and Oxidizing Gases.

63.2.3.1.3.1 Flammable and oxidizing gases shall not be stored or used in other than industrial and storage occupancies. [**55:**6.3.1.3.1]

63.2.3.1.3.2 Containers, cylinders, or tanks not exceeding 250 ft^3 (7.1 m^3) content at normal temperature and pressure (NTP) and used for maintenance purposes, patient care, or operation of equipment shall be permitted. [**55:**6.3.1.3.2]

63.2.3.1.4 Toxic and Highly Toxic Compressed Gases. Except for containers or cylinders not exceeding 20 ft^3 (0.6 m^3) content at NTP stored or used within gas cabinets or exhausted enclosures of educational occupancies, toxic or highly toxic compressed gases shall not be stored or used in other than industrial and storage occupancies. [**55:**6.3.1.4]

63.2.3.2 Classification of Protection Levels. The protection level required shall be based on the hazard class of the material involved as indicated in 6.3.2.1 through 6.3.2.5 of NFPA 55. [**55:**6.3.2]

63.2.3.2.1 Protection Level 1. Occupancies used for the storage or use of unstable reactive Class 4 and unstable reactive Class 3 detonable compressed gases in quantities that exceed the quantity thresholds for gases requiring special provisions shall be classified Protection Level 1. [**55:**6.3.2.1]

63.2.3.2.2 Protection Level 2. Occupancies used for the storage or use of flammable, pyrophoric, and nondetonable, unstable reactive Class 3 compressed gases or cryogenic fluids in quantities that exceed the quantity thresholds for gases requiring special provisions shall be classified as Protection Level 2. [**55:**6.3.2.2]

63.2.3.2.3 Protection Level 3. Occupancies used for the storage or use of oxidizing, and unstable reactive Class 2 compressed gases or cryogenic fluids in quantities that exceed the quantity thresholds for gases requiring special provisions shall be classified as Protection Level 3. [**55:**6.3.2.3]

63.2.3.2.4 Protection Level 4. Occupancies used for the storage or use of toxic, highly toxic, and corrosive compressed gases in quantities that exceed the quantity thresholds for gases requiring special provisions shall be classified as Protection Level 4. [**55:**6.3.2.4]

63.2.3.2.5 Protection Level 5. Buildings and portions thereof used for fabrication of semiconductors or semiconductor research and development and containing quantities of hazardous materials exceeding the maximum allowable quantities of high hazard level 5 contents permitted in control areas shall be classified as Protection Level 5. [**55:**6.3.2.5]

63.2.4 Gas Rooms. Gas rooms shall meet the requirements of 6.4.1 through 6.4.5 of NFPA 55. [**55:**6.4]

63.2.4.1 Pressure Control. Gas rooms shall operate at a negative pressure in relationship to the surrounding area. [**55:**6.4.1]

63.2.4.2 Exhaust Ventilation. Gas rooms shall be provided with an exhaust ventilation system. [**55:**6.4.2]

63.2.4.3 Construction. Gas rooms shall be constructed in accordance with the building code. [**55:**6.4.3]

63.2.4.4 Separation. Gas rooms shall be separated from other occupancies by a minimum of 1-hour fire resistance. [**55:**6.4.4]

63.2.4.5 Limitation on Contents. The function of compressed gas rooms shall be limited to storage and use of compressed gases and associated equipment and supplies. [**55:**6.4.5]

63.2.5 Detached Buildings. Occupancies used for the storage or use of compressed gases in quantities exceeding those specified in Table 63.2.5 shall be in detached buildings constructed in accordance with the provisions of the building code. [**55:**6.5]

Table 63.2.5 Detached Buildings (Detached Building Required Where Quantity of Material Exceeds Amount Shown)

		Quantity of Material	
Gas Hazard	Class	ft^3	m^3
Unstable reactive (detonable)	4 or 3	Quantity thresholds for gases requiring special provisions*	
Unstable reactive (nondetonable)	3	2,000	57
Unstable reactive (nondetonable)	2	10,000	283
Pyrophoric gas	NA	2,000	57

NA: Not applicable.
*See Table 63.2.3.1.
[**55:**Table 6.5]

Table 63.2.3.1 Maximum Allowable Quantity of Gases per Control Area (Quantity Thresholds for Gases Requiring Special Provisions)

Material	Unsprinklered Areas		Sprinklered Areas	
	No Gas Cabinet, Gas Room, or Exhausted Enclosure	Gas Cabinet, Gas Room, or Exhausted Enclosure	No Gas Cabinet, Gas Room, or Exhausted Enclosure	Gas Cabinet, Gas Room, or Exhausted Enclosure
Corrosive Gas				
Liquefied	150 lb (68 kg)	300 lb (136 kg)	300 lb (136 kg)	600 lb (272 kg)
Nonliquefied	810 ft^3 (23 m^3)	1620 ft^3 (46 m^3)	1620 ft^3 (46 m^3)	3240 ft^3 (92 m^3)
Cryogenic Fluid				
Flammable	0 gal (0 L)	45 gal (170 L)	45 gal (170 L)	45 gal (170 L)*
Oxidizing	45 gal (170 L)	90 gal (340 L)	90 gal (340 L)	180 gal (681 L)
Flammable Gas				
Liquefied	30 gal (114 L)	60 gal (227 L)	60 gal (227 L)	120 gal (454 L)
Nonliquefied	1000 ft^3 (28 m^3)	2000 ft^3 (56 m^3)	2000 ft^3 (57 m^3)	4000 ft^3 (113 m^3)
Highly Toxic Gas				
Liquefied	0 lb (0 kg)	5 lb (2.3 kg)	0 lb (0 kg)	10 lb (4.5 kg)
Nonliquefied	0 ft^3 (0 m^3)	20 ft^3 (0.6 m^3)	0 ft^3 (0 m^3)	40 ft^3 (1.1 m^3)
Nonflammable Gas				
Liquefied	No limit	No limit	No limit	No limit
Nonliquefied	No limit	No limit	No limit	No limit
Oxidizing Gas				
Liquefied	15 gal (57 L)	30 gal (114 L)	30 gal (114 L)	60 gal (227 L)
Nonliquefied	1500 ft^3 (43 m^3)	3000 ft^3 (85 m^3)	3000 ft^3 (85 m^3)	6000 ft^3 (170 m^3)
Pyrophoric Gas				
Liquefied	0 lb (0 kg)	0 lb (0 kg)	4 lb (1.8 kg)	8 lb (3.6 kg)
Nonliquefied	0 ft^3 (0 m^3)	0 ft^3 (0 m^3)	50 ft^3 (1.4 m^3)	100 ft^3 (2.8 m^3)
Toxic Gas				
Liquefied	150 lb (68 kg)	300 lb (136 kg)	300 lb (136 kg)	600 lb (272 kg)
Nonliquefied	810 ft^3 (23 m^3)	1620 ft^3 (46 m^3)	1620 ft^3 (46 m^3)	3240 ft^3 (92 m^3)
Unstable Reactive (Detonable) Gas, Class 3 or Class 4				
Liquefied	0 lb (0 kg)	0 lb (0 kg)	1 lb (0.5 kg)	2 lb (1 kg)
Nonliquefied	0 ft^3 (0 m^3)	0 ft^3 (0 m^3)	10 ft^3 (0.3 m^3)	20 ft^3 (0.6 m^3)
Unstable Reactive (Nondetonable) Gas, Class 3				
Liquefied	2 lb (1 kg)	4 lb (2 kg)	4 lb (2 kg)	8 lb (4 kg)
Nonliquefied	50 ft^3 (1.4 m^3)	100 ft^3 (3 m^3)	100 ft^3 (3 m^3)	200 ft^3 (6 m^3)
Unstable Reactive Gas, Class 2				
Liquefied	30 gal (114 L)	60 gal (227 L)	60 gal (227 L)	120 gal (454 L)
Nonliquefied	750 ft^3 (21 m^3)	1500 ft^3 (43 m^3)	1500 ft^3 (43 m^3)	3000 ft^3 (85 m^3)
Unstable Reactive Gas, Class 1				
Liquefied	No limit	No limit	No limit	No limit
Nonliquefied	No limit	No limit	No limit	No limit

Note: The maximum quantity indicated is the aggregate quantity of materials in storage and use combined.
*A gas cabinet or exhausted enclosure is required. Pressure-relief devices or stationary or portable containers shall be vented directly outdoors or to an exhaust hood. *(See 8.2.6 of NFPA 55.)*
[**55**:Table 6.3.1]

63.2.5.1 For such storage or use areas to be regulated as outdoor storage or use, compliance with 6.5.3 and 6.5.4 of NFPA 55 shall be required. [**55:**6.5.1]

63.2.5.2 Classification of Weather Protection as an Indoor Versus Outdoor Area. For other than explosive materials and hazardous materials presenting a detonation hazard, a weather protection structure shall be permitted to be used for sheltering outdoor storage or use areas, without requiring such areas to be classified as indoor storage. For such storage or use areas to be regulated as outdoor storage or use, compliance with conditions in 6.5.3 and 6.5.4 of NFPA 55 shall be required. Where storage or use areas are provided with weather protection that does not comply with these conditions, the storage or use area shall be regulated as an indoor storage or use area. [**55:**6.5.2]

63.2.5.3 Supports and walls shall not obstruct more than one side or more than 25 percent of the perimeter of the storage or use area. [**55:**6.5.3]

63.2.5.4 The distance from the structure and the structural supports to buildings, lot lines, public ways or means of egress to a public way shall not be less than the distance required for an outside hazardous material storage or use area without weather protection. Where the weather protection structure is constructed of noncombustible materials, reductions in the separation distance shall be permitted based on the use of fire barrier walls when permitted for specific materials in accordance with the requirements of Chapters 7 through 11 of NFPA 55. [**55:**6.5.4]

63.2.6 Electrical Equipment. Electrical wiring and equipment shall be in accordance with this subsection and NFPA 70, notably Article 505. [**55:**6.6]

63.2.6.1 Standby Power.

63.2.6.1.1 Where the following systems are required by NFPA 55 due to the storage or use of compressed gases or cryogenic fluids that exceed the quantity thresholds for gases requiring special provisions, such systems shall be connected to a standby power system in accordance with NFPA 70:

(1) Mechanical ventilation
(2) Treatment systems
(3) Temperature controls
(4) Alarms
(5) Detection systems
(6) Other electrically operated systems [**55:**6.6.1.1]

63.2.6.1.2 The requirements of 6.6.1.1 of NFPA 55 shall not apply where emergency power is provided in accordance with NFPA 70. [**55:**6.6.1.2]

63.2.6.2 Emergency Power. When emergency power is required, the system shall meet the requirements for a Protection Level 2 system in accordance with NFPA 110, *Standard for Emergency and Standby Power Systems.* [**55:**6.6.2]

63.2.7 Emergency Alarm. A manual emergency alarm system shall be provided in buildings, rooms, or areas used for the storage or use of compressed gases or cryogenic fluids in amounts that exceed quantity thresholds requiring special provisions. [**55:**6.7]

63.2.7.1 Activation of an emergency alarm-initiating device shall sound a local alarm to alert occupants in the immediate area of an emergency situation involving a compressed gas or cryogenic fluid. [**55:**6.7.1]

63.2.8* Employee Alarm System. When required by government regulations, an employee alarm system shall be provided to allow warning for necessary emergency action as called for in the emergency action plan required by 4.2.1.1 of NFPA 55, or for reaction time for safe egress of employees from the workplace or the immediate work area, or both. [**55:**6.8]

63.2.9* Explosion Control. Explosion control shall be provided as required by Table 63.2.9 in accordance with NFPA 69, *Standard on Explosion Prevention Systems,* where amounts of compressed gases in storage or use exceed the quantity thresholds requiring special provisions. [**55:**6.9]

Table 63.2.9 Explosion Control Requirements

		Explosion Control Methods	
Material	**Class**	**Barricade Construction**	**Explosion Venting or Prevention Systems**
Cryogenic flammable	—	Not required	Required
Flammable gas	Nonliquefied	Not required	Required
	Liquefied	Not required	Required
Pyrophoric gas	—	Not required	Required
Unstable reactive gas	4	Required	Not required
	3 (detonable)	Required	Not required
	3 (nondetonable)	Not required	Required

[**55:**Table 6.9]

63.2.10* Fire Protection Systems. Except as provided in 6.10.1 of NFPA 55, buildings or portions thereof required to comply with Protection Levels 1 through 5 shall be protected by an approved automatic fire sprinkler system complying with NFPA 13. [**55:**6.10]

63.2.10.1 Rooms or areas that are of noncombustible construction with wholly noncombustible contents shall not be required to be protected by an automatic fire sprinkler system. [**55:**6.10.1]

63.2.10.2 Sprinkler System Design.

63.2.10.2.1 When sprinkler protection is provided, the area in which compressed gases or cryogenic fluids are stored or used shall be protected with a sprinkler system designed to be not less than that required by NFPA 13 for Ordinary Hazard Group 2 with a minimum design area of 3000 ft^2 (278.7 m^2). [**55:**6.10.2.1]

63.2.10.2.2 When sprinkler protection is provided, the area in which the flammable or pyrophoric compressed gases or cryogenic fluids are stored or used shall be protected with a sprinkler system designed to be not less than that required by NFPA 13 for Extra Hazard Group 1 with a minimum design area of 2500 ft^2 (232.25 m^2). [**55:**6.10.2.2]

63.2.11 Lighting. Approved lighting by natural or artificial means shall be provided. [55:6.11]

63.2.12 Hazard Identification Signs. [55:6.12]

63.2.12.1 Location. Hazard identification signs shall be placed at all entrances to locations where compressed gases are produced, stored, used, or handled in accordance with NFPA 704, *Standard System for the Identification of the Hazards of Materials for Emergency Response.* [55:6.12.1]

63.2.12.1.1 Ratings shall be assigned in accordance with NFPA 704. [55:6.12.1.1]

63.2.12.1.2 The AHJ shall be permitted to waive this requirement where consistent with safety. [55:6.12.1.2]

63.2.12.2 Application. Signage shall be provided as specified in 6.12.2.1 and 6.12.2.2 of NFPA 55. [55:6.12.2]

63.2.12.2.1 Signs. Signs shall not be obscured or removed. [55:6.12.2.1]

63.2.12.2.2 No Smoking. Signs prohibiting smoking or open flames within 25 ft (6.1 m) of area perimeters shall be provided in areas where toxic, highly toxic, corrosive, unstable reactive, flammable, oxidizing, or pyrophoric gases are produced, stored, or used. [55:6.12.2.2]

63.2.13 Spill Control, Drainage, and Secondary Containment. Spill control, drainage, and secondary containment shall not be required for compressed gases. [55:6.13]

63.2.14 Shelving.

63.2.14.1 Shelves used for the storage of cylinders, containers, and tanks shall be of noncombustible construction and designed to support the weight of the materials stored. [55:6.14.1]

63.2.14.2 In seismically active areas, shelves and containers shall be secured from overturning. [55:6.14.2]

63.2.15 Vent Pipe Termination. The termination point for piped vent systems serving cylinders, containers, tanks, and gas systems used for the purpose of operational or emergency venting shall be located to prevent impingement exposure on the system served and to minimize the effects of high temperature thermal radiation or the effects of contact with the gas from the escaping plume to the supply system, personnel, adjacent structures, and ignition sources. [55:6.15]

63.2.16 Ventilation. Indoor storage and use areas and storage buildings for compressed gases and cryogenic fluids shall be provided with mechanical exhaust ventilation or natural ventilation, where natural ventilation can be shown to be acceptable for the material as stored. [55:6.16]

63.2.16.1 Mechanical Ventilation. Where mechanical ventilation is provided, the system shall be operational during the time the building or space is occupied. [55:6.16.1]

63.2.16.2 Compressed Air. The requirements of Section 6.16 and 6.16.1 of NFPA 55 shall not apply to cylinders, containers, and tanks containing compressed air. [55:6.16.2]

63.2.16.3 Mechanical Ventilation Rate. Mechanical ventilation shall be at a rate of not less than 1 $ft^3/min/ft^2$ (0.3048 $m^3/min/m^2$) of floor area over the area of storage or use. [55:6.16.3]

63.2.16.4 Continuous Operation. Systems shall operate continuously unless an alternate design is approved by the AHJ. [55:6.16.4]

63.2.16.5 Shutoff Controls. Where powered ventilation is provided, a manual shutoff switch shall be provided outside of the room in a position adjacent to the principal access door to the room or in an approved location. [55:6.16.5]

63.2.16.6 Manual Shutoff Switch. The switch shall be the break-glass or equivalent type and shall be labeled as follows: [55:6.16.6]

WARNING:
VENTILATION SYSTEM EMERGENCY SHUTOFF

63.2.16.7 Inlets to the Exhaust System.

63.2.16.7.1 The exhaust ventilation system design shall take into account the density of the potential gases released. [55:6.16.7.1]

63.2.16.7.2 For gases that are heavier than air, exhaust shall be taken from a point within 12 in. (304.8 mm) of the floor. [55:6.16.7.2]

63.2.16.7.3 For gases that are lighter than air, exhaust shall be taken from a point within 12 in. (304.8 mm) of the ceiling. [55:6.16.7.3]

63.2.16.8 Floor Level Exhaust. The location of both the exhaust and inlet air openings shall be designed to provide air movement across all portions of the floor or room to prevent the accumulation of vapors. [55:6.16.8]

63.2.16.9 Recirculation of Exhaust. Exhaust ventilation shall not be recirculated within the room or building if the cylinders, containers, or tanks stored are capable of releasing hazardous gases. [55:6.16.9]

63.2.16.10 Ventilation Discharge. Ventilation systems shall discharge a minimum of 50 ft (15 m) from intakes of air-handling systems, air-conditioning equipment, and air compressors. [55:6.16.10]

63.2.16.11 Air Intakes. Storage and use of compressed gases shall be located not less than 50 ft (15 m) from air intakes. For material-specific requirements see Sections 7.4 through 7.10 of NFPA 55. [55:6.16.11]

63.2.17 Gas Cabinets. Where a gas cabinet is required, is used to provide separation of gas hazards, or is used to increase the threshold quantity for a gas requiring special provisions, the gas cabinet shall be in accordance with the requirements of 6.17.1 through 6.17.5 of NFPA 55. [55:6.17]

63.2.17.1 Construction. [55:6.17.1]

63.2.17.1.1 Materials of Construction. The gas cabinet shall be constructed of not less than 0.097 in. (2.46 mm) (12 gauge) steel. [55:6.17.1.1]

63.2.17.1.2 Access to Controls. The gas cabinet shall be provided with self-closing limited access ports or noncombustible windows to give access to equipment controls. [55:6.17.1.2]

63.2.17.1.3 Self-Closing Doors. The gas cabinet shall be provided with self-closing doors. [55:6.17.1.3]

63.2.17.2 Ventilation Requirements.

63.2.17.2.1 The gas cabinet shall be provided with an exhaust ventilation system designed to operate at a negative pressure relative to the surrounding area. [55:6.17.2.1]

63.2.17.2.2 Where toxic; highly toxic; pyrophoric; unstable, reactive Class 3 or Class 4; or corrosive gases are contained, the velocity at the face of access ports or windows, with the access port

or window open, shall not be less than 200 ft/min (61 m/min) average, with not less than 150 ft/min (46 m/min) at any single point. [55:6.17.2.2]

63.2.17.3 Fire Protection. Gas cabinets used to contain toxic, highly toxic, or pyrophoric gases shall be internally sprinklered. [55:6.17.3]

63.2.17.4 Quantity Limits. Gas cabinets shall contain not more than three containers, cylinders, or tanks. [55:6.17.4]

63.2.17.5 Separation of Incompatibles. Incompatible gases, as defined by Table 63.3.1.6.2, shall be stored or used within separate gas cabinets. [55:6.17.5]

63.2.18 Exhausted Enclosures.

63.2.18.1 Ventilation Requirements. Where an exhausted enclosure is required or used to increase the threshold quantity for a gas requiring special provisions, the exhausted enclosure shall be provided with an exhaust ventilation system designed to operate at a negative pressure in relationship to the surrounding area. [55:6.18.1]

63.2.18.1.1 Control Velocity at Access Openings. Where toxic; highly toxic; pyrophoric; unstable, reactive Class 3 or Class 4; or corrosive gases are contained, the velocity at the face openings providing access shall be not less than 200 ft/min (61 m/min) average, with not less than 150 ft/min (46 m/min) at any single point. [55:6.18.1.1]

63.2.18.1.2 Separation of Incompatible Gases Within Enclosures. Cylinders, containers, and tanks within enclosures shall be separated in accordance with Table 63.3.1.6.2. [55:6.18.1.2]

63.2.18.1.3 Fire Protection. Exhausted enclosures shall be internally sprinklered. [55:6.18.1.3]

63.2.18.2 Separation. Incompatible gases, as defined by Table 63.3.1.6.2, shall be stored or used within separate exhausted enclosures. [55:6.18.2]

63.3 Compressed Gases.

63.3.1 General. The storage, use, and handling of compressed gases in containers, cylinders, and tanks shall be in accordance with the provisions of Chapter 1 through Chapter 7 of NFPA 55. [55:7.1]

63.3.1.1* Listed and Approved Hydrogen Equipment.

63.3.1.1.1 Listed and approved hydrogen generating and consuming equipment shall be in accordance with the listing requirements and manufacturers' instructions. [55:7.1.1.1]

63.3.1.1.2 Such equipment shall not be required to meet the requirements of Chapter 7 of NFPA 55. [55:7.1.1.2]

63.3.1.2 Containers, Cylinders, and Tanks.

63.3.1.2.1 Design and Construction. Containers, cylinders, and tanks shall be designed, fabricated, tested, and marked (stamped) in accordance with regulations of DOT, Transport Canada (TC) *Transportation of Dangerous Goods Regulations*, or the ASME *Boiler and Pressure Vessel Code*, "Rules for the Construction of Unfired Pressure Vessels," Section VIII. [55:7.1.2.1]

63.3.1.2.2 Defective Containers, Cylinders, and Tanks.

63.3.1.2.2.1 Defective containers, cylinders, and tanks shall be returned to the supplier. [55:7.1.2.2.1]

63.3.1.2.2.2 Suppliers shall either repair the containers, cylinders, and tanks, remove them from service, or dispose of them in an approved manner. [55:7.1.2.2.2]

63.3.1.2.3 Supports. Stationary cylinders, containers, and tanks shall be provided with engineered supports of noncombustible material on noncombustible foundations. [55:7.1.2.3]

63.3.1.2.4 Containers, Cylinders, and Tanks Containing Residual Gas. Compressed gas containers, cylinders, and tanks containing residual product shall be treated as full except when being examined, serviced, or refilled by a gas manufacturer or distributor. [55:7.1.2.4]

63.3.1.2.5 Pressure-Relief Devices.

63.3.1.2.5.1 When required by 7.1.2.5.2 of NFPA 55, pressure-relief devices shall be provided to protect containers and systems containing compressed gases from rupture in the event of overpressure from thermal exposure. [55:7.1.2.5.1]

63.3.1.2.5.2 Pressure-relief devices to protect containers shall be designed and provided in accordance with CGA S-1.1, *Pressure Relief Device Standards – Part 1– Cylinders for Compressed Gases*, for cylinders; CGA S-1.2, *Pressure Relief Device Standards – Part 2 – Cargo and Portable Tanks for Compressed Gases*, for portable tanks; and CGA S-1.3, *Pressure Relief Device Standards – Part 3 – Stationary Storage Containers for Compressed Gases*, for stationary tanks or applicable equivalent requirements in the country of use. [55:7.1.2.5.2]

63.3.1.2.5.3 Pressure-relief devices shall be sized in accordance with the specifications to which the container was fabricated. [55:7.1.2.5.3]

63.3.1.2.5.4 The pressure-relief device shall have the capacity to prevent the maximum design pressure of the container or system from being exceeded. [55:7.1.2.5.4]

63.3.1.2.5.5 Pressure-relief devices shall be arranged to discharge upward and unobstructed to the open air in such a manner as to prevent any impingement of escaping gas upon the container, adjacent structures, or personnel. This requirement shall not apply to DOT specification containers having an internal volume of 2.0 ft^3 (0.057 m^3) or less. [55:7.1.2.5.5]

63.3.1.2.5.6 Pressure-relief devices or vent piping shall be designed or located so that moisture cannot collect and freeze in a manner that would interfere with operation of the device. [55:7.1.2.5.6]

63.3.1.3 Labeling Requirements.

63.3.1.3.1 Containers. Individual compressed gas containers, cylinders, and tanks shall be marked or labeled in accordance with DOT requirements or those of the applicable regulatory agency. [55:7.1.3.1]

63.3.1.3.2 Label Maintenance. The labels applied by the gas manufacturer to identify the liquefied or nonliquefied compressed gas cylinder contents shall not be altered or removed by the user. [55:7.1.3.2]

63.3.1.3.3 Stationary Compressed Gas Containers, Cylinders, and Tanks.

63.3.1.3.3.1 Stationary compressed gas containers, cylinders, and tanks shall be marked in accordance with NFPA 704. [55:7.1.3.3.1]

63.3.1.3.3.2 Markings shall be visible from any direction of approach. [55:7.1.3.3.2]

63.3.1.3.4 Piping Systems.

63.3.1.3.4.1 Except as provided in 7.1.3.4.2 of NFPA 55, piping systems shall be marked in accordance with ASME A13.1, *Scheme for the Identification of Piping Systems,* or other applicable standards, as follows:

(1) Marking shall include the name of the gas and a direction-of-flow arrow.
(2) Piping that is used to convey more than one gas at various times shall be marked to provide clear identification and warning of the hazard.
(3) Markings for piping systems shall be provided at the following locations:
   (a) At each critical process control valve
   (b) At wall, floor, or ceiling penetrations
   (c) At each change of direction
   (d) At a minimum of every 20 ft (6.1 m) or fraction thereof throughout the piping run [55:7.1.3.4.1]

63.3.1.3.4.2 Piping within gas-manufacturing plants, gas-processing plants, refineries, and similar occupancies shall be marked in an approved manner. [55:7.1.3.4.2]

63.3.1.4 Security.

63.3.1.4.1 General. Compressed gas containers, cylinders, tanks, and systems shall be secured against accidental dislodgement and against access by unauthorized personnel. [55:7.1.4.1]

63.3.1.4.2 Security of Areas. Storage, use, and handling areas shall be secured against unauthorized entry. [55:7.1.4.2]

63.3.1.4.3 Physical Protection.

63.3.1.4.3.1 Compressed gas containers, cylinders, tanks, and systems that could be exposed to physical damage shall be protected. [55:7.1.4.3.1]

63.3.1.4.3.2 Guard posts or other means shall be provided to protect compressed gas containers, cylinders, tanks, and systems indoors and outdoors from vehicular damage. [55:7.1.4.3.2]

63.3.1.4.4 Securing Compressed Gas Containers, Cylinders, and Tanks. Compressed gas containers, cylinders, and tanks in use or in storage shall be secured to prevent them from falling or being knocked over by corralling them and securing them to a cart, framework, or fixed object by use of a restraint, unless otherwise permitted by 7.1.4.4.1 and 7.1.4.4.2 of NFPA 55. [55:7.1.4.4]

63.3.1.4.4.1 Compressed gas containers, cylinders, and tanks in the process of examination, servicing, and refilling shall not be required to be secured. [55:7.1.4.4.1]

63.3.1.4.4.2 At cylinder-filling plants and distributors' warehouses, the nesting of cylinders shall be permitted as a means to secure cylinders. [55:7.1.4.4.2]

63.3.1.5 Valve Protection.

63.3.1.5.1 General. Compressed gas container, cylinder, and tank valves shall be protected from physical damage by means of protective caps, collars, or similar devices. [55:7.1.5.1]

63.3.1.5.2 Valve-Protective Caps. Where compressed gas containers, cylinders, and tanks are designed to accept valve-protective caps, the user shall keep such caps on the compressed gas containers, cylinders, and tanks at all times, except when empty, being processed, or connected for use. [55:7.1.5.2]

63.3.1.5.3 Valve Outlet Caps or Plugs.

63.3.1.5.3.1 Gastight valve outlet caps or plugs shall be provided and in place for all full or partially full containers, cylinders, and tanks containing toxic, highly toxic, pyrophoric, or unstable reactive Class 3 or Class 4 gases that are in storage. [55:7.1.5.3.1]

63.3.1.5.3.2 Valve outlet caps and plugs shall be designed and rated for the container service pressure. [55:7.1.5.3.2]

63.3.1.6 Separation from Hazardous Conditions.

63.3.1.6.1 General.

63.3.1.6.1.1 Compressed gas containers, cylinders, tanks, and systems in storage or use shall be separated from materials and conditions that present exposure hazards to or from each other. [55:7.1.6.1.1]

63.3.1.6.1.2 Compressed gas containers, cylinders, tanks, and systems in storage or use shall be separated in accordance with 7.1.6 of NFPA 55. [55:7.1.6.1.2]

63.3.1.6.1.3 Paragraph 7.1.6.1.2 of NFPA 55 shall not apply to gases contained within closed piping systems, compressed gas containers, cylinders, tanks, and systems in storage or use when separated in accordance with 7.1.6 of NFPA 55. [55:7.1.6.1.3]

63.3.1.6.2* Incompatible Materials. Gas containers, cylinders, and tanks shall be separated in accordance with Table 63.3.1.6.2. [55:7.1.6.2]

63.3.1.6.2.1 The 20 ft (6.1 m) distance shall be permitted to be reduced without limit when separated by a barrier of noncombustible materials at least 5 ft (1.5 m) high that has a fire resistance rating of at least 0.5 hour. [55:7.1.6.2.1]

63.3.1.6.2.2 The 20 ft (6.1 m) distance shall be permitted to be reduced to 5 ft (1.5 m) where one of the gases is enclosed in a gas cabinet or without limit where both gases are enclosed in gas cabinets. [55:7.1.6.2.2]

63.3.1.6.2.3 Cylinders without pressure-relief devices shall not be stored without separation from flammable and pyrophoric gases with pressure-relief devices. [55:7.1.6.2.3]

63.3.1.6.2.4 Spatial separation shall not be required between cylinders deemed to be incompatible that are connected to manifolds for the purposes of filling and manufacturing procedures assuming the prescribed controls for the manufacture of gas mixtures are in place. [55:7.1.6.2.4]

63.3.1.6.3 Clearance from Combustibles and Vegetation. Combustible waste, vegetation, and similar materials shall be kept a minimum of 10 ft (3 m) from compressed gas containers, cylinders, tanks, and systems. [55:7.1.6.3]

63.3.1.6.3.1 A noncombustible partition without openings or penetrations and extending sides not less than 18 in. (457 mm) above and to the sides of the storage area shall be permitted in lieu of the minimum distance. [55:7.1.6.3.1]

63.3.1.6.3.2 The noncombustible partition shall either be an independent structure or the exterior wall of the building adjacent to the storage area. [55:7.1.6.3.2]

63.3.1.6.4 Ledges, Platforms, and Elevators. Compressed gas containers, cylinders, and tanks shall not be placed near elevators, unprotected platform ledges, or other areas where compressed gas containers, cylinders, or tanks could fall for distances exceeding one-half the height of the container, cylinder, or tank. [55:7.1.6.4]

Table 63.3.1.6.2 Separation of Gas Containers, Cylinders, and Tanks by Hazard Class

		Unstable Reactive Class 2, Class 3, or Class 4		Corrosive		Oxidizing		Flammable		Pyrophoric		Toxic or Highly Toxic	
Gas Category	Other Gas	ft	m	ft	m	ft	m	ft	m	ft	m	ft	m
Toxic or highly toxic	NR	20	6.1	20	6.1	20	6.1	20	6.1	20	6.1	—	
Pyrophoric	NR	20	6.1	20	6.1	20	6.1	20	6.1	—		20	6.1
Flammable	NR	20	6.1	20	6.1	20	6.1	—		20	6.1	20	6.1
Oxidizing	NR	20	6.1	20	6.1	—		20	6.1	20	6.1	20	6.1
Corrosive	NR	20	6.1	—		20	6.1	20	6.1	20	6.1	20	6.1
Unstable reactive Class 2, Class 3, or Class 4	NR	—		20	6.1	20	6.1	20	6.1	20	6.1	20	6.1
Other gas	—	NR		NR		NR		NR		NR		NR	

NR: No separation required.
[55:Table 7.1.6.2]

63.3.1.6.5 Temperature Extremes. Compressed gas containers, cylinders, and tanks, whether full or partially full, shall not be exposed to temperatures exceeding 125°F (52°C) or subambient (low) temperatures unless designed for use under such exposure. [55:7.1.6.5]

63.3.1.6.6 Falling Objects. Compressed gas containers, cylinders, and tanks shall not be placed in areas where they are capable of being damaged by falling objects. [55:7.1.6.6]

63.3.1.6.7 Heating. Compressed gas containers, cylinders, and tanks, whether full or partially full, shall not be heated by devices that could raise the surface temperature of the container, cylinder, or tank to above 125°F (52°C). [55:7.1.6.7]

63.3.1.6.7.1 Electrically Powered Heating Devices. Electrical heating devices shall be in accordance with NFPA 70. [55:7.1.6.7.1]

63.3.1.6.7.2 Fail-Safe Design. Devices designed to maintain individual compressed gas containers, cylinders, or tanks at constant temperature shall be designed to be fail-safe. [55:7.1.6.7.2]

63.3.1.6.8 Sources of Ignition. Open flames and high-temperature devices shall not be used in a manner that creates a hazardous condition. [55:7.1.6.8]

63.3.1.6.9 Exposure to Chemicals. Compressed gas containers, cylinders, and tanks shall not be exposed to corrosive chemicals or fumes that could damage containers, cylinders, tanks, or valve-protective caps. [55:7.1.6.9]

63.3.1.6.10 Exposure to Electrical Circuits. Compressed gas containers, cylinders, and tanks shall not be placed where they could become a part of an electrical circuit. [55:7.1.6.10]

63.3.1.7 Service and Repair. Service, repair, modification, or removal of valves, pressure-relief devices, or other compressed gas container, cylinder, or tank appurtenances shall be performed by trained personnel and with the permission of the container owner. [55:7.1.7]

63.3.1.8 Unauthorized Use. Compressed gas containers, cylinders, and tanks shall not be used for any purpose other than to serve as a vessel for containing the product for which it was designed. [55:7.1.8]

63.3.1.9 Containers, Cylinders, and Tanks Exposed to Fire. Compressed gas containers, cylinders, and tanks exposed to fire shall not be used or shipped while full or partially full until they are requalified in accordance with the pressure vessel code under which they were manufactured. [55:7.1.9]

63.3.1.10 Leaks, Damage, or Corrosion.

63.3.1.10.1 Removal from Service. Leaking, damaged, or corroded compressed gas containers, cylinders, and tanks shall be removed from service. [55:7.1.10.1]

63.3.1.10.2 Replacement and Repair. Leaking, damaged, or corroded compressed gas systems shall be replaced or repaired. [55:7.1.10.2]

63.3.1.10.3* Handling of Containers, Cylinders, and Tanks Removed from Service. Compressed gas containers, cylinders, and tanks that have been removed from service shall be handled in an approved manner. [55:7.1.10.3]

63.3.1.10.4 Leaking Systems. Compressed gas systems that are determined to be leaking, damaged, or corroded shall be repaired to a serviceable condition or shall be removed from service. [55:7.1.10.4]

63.3.1.11 Surfaces.

63.3.1.11.1 To prevent bottom corrosion, containers, cylinders, and tanks shall be protected from direct contact with soil or surfaces where water might accumulate. [55:7.1.11.1]

63.3.1.11.2 Surfaces shall be graded to prevent accumulation of water. [55:7.1.11.2]

63.3.1.12 Storage Area Temperature.

63.3.1.12.1 Compressed Gas Containers. Storage area temperatures shall not exceed 125°F (52°C). [55:7.1.12.1]

63.3.2 Storage.

63.3.2.1 General.

63.3.2.1.1 Applicability. The storage of compressed gas containers, cylinders, and tanks shall be in accordance with Section 7.2 of NFPA 55. [55:7.2.1.1]

63.3.2.1.2 Upright Storage Flammable Gas in Solution and Liquefied Flammable Gas. Cylinders, containers, and tanks containing liquefied flammable gases and flammable gases in solution shall be positioned in the upright position. [55:7.2.1.2]

63.3.2.1.2.1 Containers and Cylinders of Less than 1.3 Gal (5 L). Containers with a capacity of 1.3 gal (5 L) or less shall be permitted to be stored in a horizontal position. [55:7.2.1.2.1]

63.3.2.1.2.2 Containers, Cylinders, and Tanks Designed for Horizontal Use. Containers, cylinders, and tanks designed for use in a horizontal position shall be permitted to be stored in a horizontal position. [55:7.2.1.2.2]

63.3.2.1.2.3 Palletized Containers, Cylinders, and Tanks. Containers, cylinders, and tanks, with the exception of those containing flammable liquefied compressed gases, that are palletized for transportation purposes shall be permitted to be stored in a horizontal position. [55:7.2.1.2.3]

63.3.2.1.3 Classification of Weather Protection as an Indoor Versus Outdoor Area. For other than explosive materials and hazardous materials presenting a detonation hazard, a weather protection structure shall be permitted to be used for sheltering outdoor storage or use areas, without requiring such areas to be classified as indoor storage. [55:7.2.1.3]

63.3.2.2 Material-Specific Regulations.

63.3.2.2.1 Indoor Storage. Indoor storage of compressed gases shall be in accordance with the material-specific provisions of Sections 7.4 through 7.10 of NFPA 55. [55:7.2.2.1]

63.3.2.2.2 Exterior Storage.

63.3.2.2.2.1 General. Exterior storage of compressed gases shall be in accordance with the material-specific provisions of Sections 7.4 through 7.10 of NFPA 55. [55:7.2.2.2.1]

63.3.2.2.2.2 Separation. Distances from property lines, buildings, and exposures shall be in accordance with the material-specific provisions of Sections 7.4 through 7.10 of NFPA 55. [55:7.2.2.2.2]

63.3.3 Use and Handling.

63.3.3.1 General.

63.3.3.1.1 Applicability. The use and handling of compressed gas containers, cylinders, tanks, and systems shall be in accordance with 7.3.1 of NFPA 55. [55:7.3.1.1]

63.3.3.1.2 Compressed Gas Systems. Compressed gas systems shall be designed for the intended use and shall be designed by persons competent in such design. [55:7.3.1.2]

63.3.3.1.2.1 Installation of bulk cryogenic fluid systems shall be supervised by personnel knowledgeable in the application of the standards for their construction and use. [55:7.3.1.2.1]

63.3.3.1.2.2 Installation of bulk compressed gas systems shall be supervised by personnel knowledgeable in the application of the standards for their construction and use. [55:7.3.1.2.2]

63.3.3.1.3 Controls.

63.3.3.1.3.1 Compressed gas system controls shall be designed to prevent materials from entering or leaving the process at an unintended time, rate, or path. [55:7.3.1.3.1]

63.3.3.1.3.2 Automatic controls shall be designed to be fail-safe. [55:7.3.1.3.2]

63.3.3.1.4 Piping Systems. Piping, tubing, fittings, and related components shall be designed, fabricated, and tested in accordance with the requirements of ASME B31.3, *Process Piping*, or other approved standards. [55:7.3.1.4]

63.3.3.1.4.1 Integrity. Piping, tubing, pressure regulators, valves, and other apparatus shall be kept gastight to prevent leakage. [55:7.3.1.4.1]

63.3.3.1.4.2 Backflow Prevention. Backflow prevention or check valves shall be provided when the backflow of hazardous materials could create a hazardous condition or cause the unauthorized discharge of hazardous materials. [55:7.3.1.4.2]

63.3.3.1.5 Valves.

63.3.3.1.5.1 Valves utilized on compressed gas systems shall be designed for the gas or gases and pressure intended and shall be accessible. [55:7.3.1.5.1]

63.3.3.1.5.2 Valve handles or operators for required shutoff valves shall not be removed or otherwise altered to prevent access. [55:7.3.1.5.2]

63.3.3.1.6 Vent Pipe Termination.

63.3.3.1.6.1 Venting of gases shall be directed to an approved location. [55:7.3.1.6.1]

63.3.3.1.6.2 The termination point for piped vent systems serving cylinders, containers, tanks, and gas systems used for the purpose of operational or emergency venting shall be in accordance with Section 6.16 of NFPA 55. [55:7.3.1.6.2]

63.3.3.1.7 Upright Use.

63.3.3.1.7.1 Compressed gas containers, cylinders, and tanks containing flammable liquefied gas, except those designed for use in a horizontal position and those compressed gas containers, cylinders, and tanks containing nonliquefied gases, shall be used in a "valve end up" upright position. [55:7.3.1.7.1]

63.3.3.1.7.2 An upright position shall include a position in which the container, cylinder, or tank axis is inclined as much as 45 degrees from the vertical and in which the relief device is always in direct communication with the gas phase. [55:7.3.1.7.2]

63.3.3.1.8 Inverted Use. Cylinders, containers, and tanks containing nonflammable liquefied gases shall be permitted to be used in the inverted position when the liquid phase is used. [55:7.3.1.8]

63.3.3.1.8.1 Flammable liquefied gases at processing plants shall be permitted to use this inverted position method while transfilling. [55:7.3.1.8.1]

63.3.3.1.8.2 The container, cylinder, or tank shall be secured, and the dispensing apparatus shall be designed for use with liquefied gas. [55:7.3.1.8.2]

63.3.3.1.9 Containers and Cylinders of 1.3 Gal (5 L) or Less. Containers or cylinders with a water volume of 1.3 gal (5 L) or less shall be permitted to be used in a horizontal position. [55:7.3.1.9]

63.3.3.1.10 Transfer.

63.3.3.1.10.1 Transfer of gases between containers, cylinders, and tanks shall be performed by qualified personnel using equipment and operating procedures in accordance with CGA P-1, *Safe Handling of Compressed Gases in Containers.* [**55:**7.3.1.10.1]

63.3.3.1.10.2 The requirements of 7.3.1.10.1 of NFPA 55 shall not apply to fueling of vehicles with compressed natural gas (CNG). [**55:**7.3.1.10.2]

63.3.3.1.11 Use of Compressed Gases for Inflation. Inflatable equipment, devices, or balloons shall only be pressurized or filled with compressed air or inert gases. [**55:**7.3.1.11]

63.3.3.1.12 Emergency Shutoff Valves.

63.3.3.1.12.1 Accessible manual valves or automatic remotely activated fail-safe emergency shutoff valves shall be provided and clearly marked. [**55:**7.3.1.12.1]

63.3.3.1.12.2 Emergency shutoffs shall be located at the point of use and at the tank, cylinder, or bulk source. [**55:**7.3.1.12.2]

63.3.3.1.13 Excess Flow Control. Excess flow control shall be provided, where required by 7.3.1.13.1 of NFPA 55, for compressed gases with a hazard rating in accordance with NFPA 704, as follows:

(1) Health hazard Class 3 or Class 4
(2) Flammability Class 4
(3) Reactivity Class 3 or Class 4 [**55:**7.3.1.13]

63.3.3.1.13.1 Excess Flow Control Above 15 psig (103 kPa). Excess flow control shall be provided for pressurized gas piping systems that are pressurized above gauge pressure of 15 psi (103 kPa) where the source of the gas exceeds the quantity threshold in Table 63.2.3.1. [**55:**7.3.1.13.1]

63.3.3.1.13.2 Location. The location of excess flow control shall be as specified in 7.3.1.13.2.1 and 7.3.1.13.2.2 of NFPA 55. [**55:**7.3.1.13.2]

63.3.3.1.13.2.1 Where piping originates from a source located in a room or area, the excess flow control shall be located within the room or area. [**55:**7.3.1.13.2.1]

63.3.3.1.13.2.2 Where piping originates from a bulk source, the excess flow control shall be as close to the bulk source as possible. [**55:**7.3.1.13.2.2]

63.3.3.1.13.3 Location Requirement Exemptions. The requirements of 7.3.1.13 of NFPA 55 shall not apply to the following:

(1) Piping for inlet connections designed to prevent backflow
(2) Piping for pressure-relief devices
(3) Systems containing 450 scf (12.7 m^3) or less of flammable gas [**55:**7.3.1.13.3]

63.3.3.2 Material-Specific Regulations.

63.3.3.2.1 Indoor Use. Indoor use of compressed gases shall be in accordance with the requirements of Sections 7.4 through 7.10 of NFPA 55. [**55:**7.3.2.1]

63.3.3.2.2 Exterior Use.

63.3.3.2.2.1 General. Exterior use of compressed gases shall be in accordance with the requirements of Sections 7.4 through 7.10 of NFPA 55. [**55:**7.3.2.2.1]

63.3.3.2.2.2 Separation. Distances from property lines, buildings, and exposure hazards shall be in accordance with the material-specific provisions of Sections 7.4 through 7.10 of NFPA 55. [**55:**7.3.2.2.2]

63.3.3.3 Handling.

63.3.3.3.1 Applicability. The handling of compressed gas containers, cylinders, and tanks shall be in accordance with 7.3.3 of NFPA 55. [**55:**7.3.3.1]

63.3.3.3.2 Carts and Trucks.

63.3.3.3.2.1 Containers, cylinders, and tanks shall be moved using an approved method. [**55:**7.3.3.2.1]

63.3.3.3.2.2 Where containers, cylinders, or tanks are moved by hand cart, hand truck, or other mobile device, such carts, trucks, or devices shall be designed for the secure movement of containers, cylinders, or tanks. [**55:**7.3.3.2.2]

63.3.3.3.3 Lifting Devices. Ropes, chains, or slings shall not be used to suspend compressed gas containers, cylinders, and tanks unless provisions at time of manufacture have been made on the container, cylinder, or tank for appropriate lifting attachments, such as lugs. [**55:**7.3.3.3]

63.3.4 Medical Gas Systems. Medical gas systems for health care shall be in accordance with NFPA 99, *Standard for Health Care Facilities.* [**55:**7.4]

63.3.5 Corrosive Gases.

63.3.5.1 General. The storage or use of corrosive compressed gases exceeding the quantity thresholds for gases requiring special provisions as specified in Table 63.2.3.1 shall be in accordance with Chapters 1 through 6 and Sections 7.1 through 7.3 of NFPA 55. [**55:**7.5.1]

63.3.5.2 Distance to Exposures. The outdoor storage or use of corrosive compressed gas shall not be within 20 ft (6.1 m) of buildings not associated with the manufacture or distribution of corrosive gases, lot lines, streets, alleys, public ways, or means of egress. [**55:**7.5.2]

63.3.5.2.1 A 2-hour fire barrier wall without openings or penetrations, and extending not less than 30 in. (762 mm) above and to the sides of the storage or use area, shall be permitted in lieu of the 20 ft (6.1 m) distance. [**55:**7.5.2.1]

63.3.5.2.1.1 The fire barrier wall shall be either an independent structure or the exterior wall of the building adjacent to the storage or use area. [**55:**7.5.2.1.1]

63.3.5.2.1.2 The 2-hour fire barrier shall be located at least 5 ft (1.5 m) from any exposure. [**55:**7.5.2.1.2]

63.3.5.2.1.3 The 2-hour fire barrier shall not have more than two sides at approximately 90 degree (1.57 rad) directions, or not more than three sides with connecting angles of approximately 135 degrees (2.36 rad). [**55:**7.5.2.1.3]

63.3.5.3 Indoor Use. The indoor use of corrosive gases shall be provided with a gas cabinet, exhausted enclosure, or gas room. [**55:**7.5.3]

63.3.5.3.1 Gas Cabinets. Gas cabinets shall be in accordance with Section 6.17 of NFPA 55. [**55:**7.5.3.1]

63.3.5.3.2 Exhausted Enclosures. Exhausted enclosures shall be in accordance with Section 6.17 of NFPA 55. [**55:**7.5.3.2]

63.3.5.3.3 Gas Rooms. Gas rooms shall be in accordance with Section 6.4 of NFPA 55. [**55:**7.5.3.3]

63.3.5.3.4 Treatment Systems. Treatment systems, except as provided for in 7.5.3.4.1 of NFPA 55, gas cabinets, exhausted enclosures, and gas rooms containing corrosive gases in use shall be provided with exhaust ventilation, with all exhaust directed to a treatment system designed to process the accidental release of gas. [55:7.5.3.4]

63.3.5.3.4.1 Treatment systems shall not be required for corrosive gases in use where provided with the following:

(1) Gas detection in accordance with 7.9.3.2.1.1 of NFPA 55
(2) Fail-safe automatic closing valves in accordance with 7.9.3.2.2 of NFPA 55 [55:7.5.3.4.1]

63.3.5.3.4.2 Treatment systems shall be capable of diluting, adsorbing, absorbing, containing, neutralizing, burning, or otherwise processing the release of corrosive gas in accordance with 7.9.3.4.1 of NFPA 55. [55:7.5.3.4.2]

63.3.5.3.4.3 Treatment system sizing shall be in accordance with 7.9.3.4 of NFPA 55. [55:7.5.3.4.3]

63.3.6 Flammable Gases.

63.3.6.1 Storage, Use, and Handling.

63.3.6.1.1 The storage or use of flammable gases exceeding the quantity thresholds for gases requiring special provisions as specified in Table 63.2.3.1 shall be in accordance with Chapters 1 through 6 and Sections 7.1 through 7.3 and Section 7.6 of NFPA 55. [55:7.6.1.1]

63.3.6.1.2 Storage, use, and handling of gaseous hydrogen shall be in accordance with 7.6.1 and Chapter 10 of NFPA 55. [55:7.6.1.2]

63.3.6.2 Distance to Exposures. The outdoor storage or use of flammable compressed gas shall be in accordance with Table 63.3.6.2. [55:7.6.2]

63.3.6.2.1 The minimum required distances shall be reduced to 5 ft (1.5 m) where protective structures having a minimum fire resistance rating of 2 hours interrupt the line of sight between the container and the exposure. [55:7.6.2.1]

63.3.6.2.2 The protective structure shall be at least 5 ft (1.5 m) from the storage or use area perimeter. [55:7.6.2.2]

63.3.6.2.3 The configuration of the protective structure shall be designed to allow natural ventilation to prevent the accumulation of hazardous gas concentrations. [55:7.6.2.3]

63.3.6.2.4 Storage and use of flammable compressed gases shall not be located within 50 ft (15.2 m) of air intakes. [55:7.6.2.4]

63.3.6.3 Ignition Source Control. Ignition sources in areas containing flammable gases shall be in accordance with 7.6.3 of NFPA 55. [55:7.6.3]

63.3.6.3.1 Static-Producing Equipment. Static-producing equipment located in flammable gas areas shall be grounded. [55:7.6.3.1]

63.3.6.3.2 No Smoking or Open Flame. Signs shall be posted in areas containing flammable gases communicating that smoking or the use of open flame, or both, is prohibited within 25 ft (7.6 m) of the storage or use area perimeter. [55:7.6.3.2]

63.3.6.4 Electrical. Areas in which the storage or use of compressed gases exceeds the quantity thresholds for gases requiring special provisions shall be in accordance with NFPA 70. [55:7.6.4]

63.3.7 Oxidizing Gases.

63.3.7.1 General. The storage or use of oxidizing compressed gases exceeding the quantity thresholds for gases requiring special provisions as specified in Table 63.2.3.1 shall be in accordance with Chapters 1 through 6 and Sections 7.1 through 7.3 and Section 7.7 of NFPA 55. [55:7.7.1]

63.3.7.2 Distance to Exposures. The outdoor storage or use of oxidizing compressed gas shall be in accordance with Table 63.3.7.2. [55:7.7.2]

63.3.7.2.1 The distances shall not apply where protective structures having a minimum fire resistance of 2 hours interrupt the line of sight between the container and the exposure. [55:7.7.2.1]

63.3.7.2.2 The protective structure shall be at least 5 ft (1.5 m) from the storage or use area perimeter. [55:7.7.2.2]

63.3.7.2.3 The configuration of the protective structure shall allow natural ventilation to prevent the accumulation of hazardous gas concentrations. [55:7.7.2.3]

63.3.8 Pyrophoric Gases.

63.3.8.1 General. Pyrophoric compressed gases exceeding the quantity thresholds for gases requiring special provisions as specified in Table 63.2.3.1 shall be stored and used in accordance with Chapters 1 through 6 and Sections 7.1 through 7.3 and Section 7.8 of NFPA 55. [55:7.8.1]

Table 63.3.6.2 Distance to Exposures for Flammable Gases

Aggregate Quantity per Storage Area		Minimum Distance to Buildings, Streets, Alleys, Public Ways, or Lot Lines of Property That Can Be Built On		Minimum Distances Between Storage Areas	
ft^3	m^3	ft	m	ft	m
<4,225	<120	5	1.5	5	1.5
4,226–21,125	120.1–598	10	3	10	3
21,126–50,700	598.1–1435	15	4.6	10	3
50,701–84,500	1435.1–2393	20	6	10	3
≥84,501	≥2393.1	25	7.5	20	6

[55:Table 7.6.2]

Table 63.3.7.2 Distance to Exposures for Oxidizing Gases

Quantity of Gas Stored (at NTP)		Distance to a Building Not Associated with the Manufacture or Distribution of Oxidizing Gases or to a Public Way or Property Line		Minimum Distance Between Storage Areas	
ft^3	m^3	ft	m	ft	m
0–50,000	0–1416	5	1.5	5	1.5
50,001–100,000	1417–2832	10	3.0	10	3.0
≥100,001	≥2833	15	4.6	15	4.6

[**55**:Table 7.7.2]

63.3.8.2 Silane and Silane Mixtures. Silane and silane mixtures shall be stored, used, and handled in accordance with the provisions of CGA P-32, *Safe Storage and Handling of Silane and Silane Mixtures.* [**55**:7.8.2]

63.3.8.3 Distance to Exposures. The outdoor storage or use of pyrophoric compressed gas shall be in accordance with Table 63.3.8.3. [**55**:7.8.3]

63.3.8.3.1 The distances shall be allowed to be reduced to 5 ft (1.5 m) when protective structures having a minimum fire resistance of 2 hours interrupt the line of sight between the container and the exposure. [**55**:7.8.3.1]

63.3.8.3.2 The protective structure shall be at least 5 ft (1.5 m) from the storage or use area perimeter. [**55**:7.8.3.2]

63.3.8.3.3 The configuration of the protective structure shall allow natural ventilation to prevent the accumulation of hazardous gas concentrations. [**55**:7.8.3.3]

63.3.9 Toxic and Highly Toxic Gases.

63.3.9.1 General. The storage or use of toxic and highly toxic gases exceeding the quantity thresholds for gases requiring special provisions as specified in Table 63.2.3.1 shall be in accordance with Chapters 1 through 6 and Sections 7.1 through 7.3 and Section 7.9 of NFPA 55. [**55**:7.9.1]

63.3.9.2 Ventilation and Arrangement.

63.3.9.2.1 Indoors. The indoor storage or use of highly toxic gases or toxic gases shall be provided with a gas cabinet, exhausted enclosure, or gas room. [**55**:7.9.2.1]

63.3.9.2.1.1 Gas cabinets shall be in accordance with Section 6.17 of NFPA 55. [**55**:7.9.2.1.1)]

63.3.9.2.1.2 Exhausted enclosures shall be in accordance with Section 6.18 of NFPA 55. [**55**:7.9.2.1.2]

63.3.9.2.1.3 Gas rooms shall be in accordance with Section 6.4 of NFPA 55. [**55**:7.9.2.1.3]

63.3.9.2.2 Distance to Exposures. The outdoor storage or use of toxic and highly toxic compressed gases shall not be within 75 ft (23 m) of lot lines, streets, alleys, public ways or means of egress, or buildings not associated with such storage or use. [**55**:7.9.2.2]

63.3.9.2.2.1 A 2-hour fire barrier wall without openings or penetrations, and extending not less than 30 in. (762 mm) above and to the sides of the storage or use area, that interrupts the line of sight between the storage or use and the exposure, shall be permitted in lieu of the 75 ft (23 m) distance. [**55**:7.9.2.2.1]

63.3.9.2.2.1.1 The fire barrier wall shall be either an independent structure or the exterior wall of the building adjacent to the storage or use area. [**55**:7.9.2.2.1.1]

63.3.9.2.2.1.2 The 2-hour fire barrier shall be located at least 5 ft (1.5 m) from any exposure. [**55**:7.9.2.2.1.2]

63.3.9.2.2.1.3 The 2-hour fire barrier shall not have more than two sides at approximately 90 degree (1.5 rad) directions, or more than three sides with connecting angles of approximately 135 degrees (2.36 rad). [**55**:7.9.2.2.1.3]

63.3.9.2.2.2 Where the storage or use area is located closer than 75 ft (23 m) to a building not associated with the manufacture or distribution of toxic or highly toxic compressed gases, openings in the building other than for piping shall not be permitted above the height of the top of the 2-hour fire

Table 63.3.8.3 Distance to Exposures for Pyrophoric Gases

Maximum Amount per Storage Area		Minimum Distance Between Storage Areas		Minimum Distance to Property Lines		Minimum Distance to Public Ways		Minimum Distance to Buildings on the Same Property: Nonrated or Openings Within 25 ft (7.6 m)		Minimum Distance to Buildings on the Same Property: 2-Hour and No Openings Within 25 ft (7.6 m)		Minimum Distance to Buildings on the Same Property: 4-Hour and No Openings Within 25 ft (7.6 m)	
ft^3	m^3	ft	m	ft	m	ft	m	ft	m	ft	m	ft	m
250	7.1	5	1.5	25	7.6	5	1.5	5	1.5	0	0	0	0
2500	71.0	10	3.0	50	15.2	10	3.0	10	3.0	5	1.5	0	0
7500	212.4	20	6.0	100	30.5	20	6.0	20	6.0	10	3.0	0	0

[**55**:Table 7.8.3]

barrier wall or within 50 ft (15 m) horizontally from the storage area, regardless of whether the openings are shielded by a fire barrier. [55:7.9.2.2.2]

63.3.9.2.3 Air Intakes. Storage and use of toxic and highly toxic compressed gases shall not be located within 75 ft (23 m) of air intakes. [55:7.9.2.3]

63.3.9.3 Treatment Systems. Except as provided in 7.9.3.1 and 7.9.3.2 of NFPA 55, gas cabinets, exhausted enclosures, and gas rooms containing toxic or highly toxic gases shall be provided with exhaust ventilation, with all exhaust directed to a treatment system designed to process accidental release of gas. [55:7.9.3]

63.3.9.3.1 Storage of Toxic or Highly Toxic Gases. Treatment systems shall not be required for toxic or highly toxic gases in storage where containers, cylinders, and tanks are provided with the controls specified in 7.9.3.1.1 through 7.9.3.1.3 of NFPA 55. [55:7.9.3.1]

63.3.9.3.1.1 Valve Outlets Protected. Valve outlets shall be equipped with outlet plugs or caps, or both, rated for the container service pressure. [55:7.9.3.1.1]

63.3.9.3.1.2 Handwheels Secured. Where provided, handwheel-operated valves shall be secured to prevent movement. [55:7.9.3.1.2]

63.3.9.3.1.3 Containment Devices Provided. Approved cylinder containment vessels or cylinder containment systems shall be provided at an approved location. [55:7.9.3.1.3]

63.3.9.3.2 Use of Toxic Gases. Treatment systems shall not be required for toxic gases in use where containers, cylinders, and tanks are provided with the controls specified in 7.9.3.2.1 and 7.9.3.2.2 of NFPA 55. [55:7.9.3.2]

63.3.9.3.2.1 Gas Detection.

63.3.9.3.2.1.1 A gas detection system with a sensing interval not exceeding 5 minutes shall be provided. [55:7.9.3.2.1.1]

63.3.9.3.2.1.2 The gas detection system shall monitor the exhaust system at the point of discharge from the gas cabinet, exhausted enclosure, or gas room. [55:7.9.3.2.1.2]

63.3.9.3.2.2 Fail-Safe Automatic Closing Valve. An approved automatic-closing fail-safe valve shall be located immediately adjacent to and downstream of active container, cylinder, or tank valves. [55:7.9.3.2.2]

63.3.9.3.2.2.1 The fail-safe valve shall close when gas is detected at the permissible exposure limit, short-term exposure limit (STEL), or ceiling limit by the gas detection system. [55:7.9.3.2.2.1]

63.3.9.3.2.2.2 For attended operations, a manual closing valve shall be permitted when in accordance with 7.9.3.4.3 of NFPA 55. [55:7.9.3.2.2.2]

63.3.9.3.2.2.3 For gases used at unattended operations for the protection of public health, such as chlorine at water or wastewater treatment sites, the automatic valve shall close if the concentration of gas detected by a gas detection system reaches one-half of the IDLH. [55:7.9.3.2.2.3]

63.3.9.3.2.2.4 The gas detection system shall also alert persons on-site and a responsible person off-site when the gas concentration in the storage/use area reaches the OSHA PEL, OSHA ceiling limit, or STEL for the gas employed. [55:7.9.3.2.2.4]

63.3.9.3.3 Treatment System Design and Performance. Treatment systems shall be capable of diluting, adsorbing, absorbing, containing, neutralizing, burning, or otherwise processing stored or used toxic or highly toxic gas, or both. [55:7.9.3.3]

63.3.9.3.3.1 Where a total containment system is used, the system shall be designed to handle the maximum anticipated pressure of release to the system when it reaches equilibrium. [55:7.9.3.3.1]

63.3.9.3.3.2 Treatment systems shall be capable of reducing the allowable discharge concentrations to one-half the IDLH threshold at the point of discharge. [55:7.9.3.3.2]

63.3.9.3.4 Treatment System Sizing.

63.3.9.3.4.1 Worst-Case Release of Gas. Treatment systems shall be sized to process the maximum worst-case release of gas based on the maximum flow rate of release from the largest vessel utilized in accordance with 7.9.3.4.2 of NFPA 55. [55:7.9.3.4.1]

63.3.9.3.4.2 Largest Compressed Gas Vessel. The entire contents of the single largest compressed gas vessel shall be considered. [55:7.9.3.4.2]

63.3.9.3.4.3 Attended Operations — Alternative Method of System Sizing.

63.3.9.3.4.3.1 Where source containers, cylinders, and tanks are used in attended process operations, with an operator present at the enclosure where the activity occurs, the volume of the release shall be limited to the estimated amount released from the process piping system within a period not to exceed 5 minutes. [55:7.9.3.4.3.1]

63.3.9.3.4.3.2 Such process piping systems shall comply with the requirements of 7.9.3.4.3.2(A) through 7.9.3.4.3.2(E) of NFPA 55. [55:7.9.3.4.3.2]

(A) Local Exhaust. All gas transfer operations shall be conducted within a zone of local exhaust that is connected to a treatment system. [55:7.9.3.4.3.2(A)]

(B) Gas Detection. Gas detection shall be used to provide a warning to alert the operators to emission of gas into the zone of local exhaust, and the following requirements also shall apply:

(1) The system shall be capable of detecting gas at the permissible exposure limit or ceiling limit for the gas being processed.
(2) Activation of the gas detection system shall provide a local alarm. [55:7.9.3.4.3.2(B)]

(C) Process Shutdown. Operations involving the gas detected shall be shut down and leaks repaired. [55:7.9.3.4.3.2(C)]

(D) Piping System Construction. Piping systems used to convey gases shall be of all-welded construction throughout, with the exception of fittings used to connect containers, cylinders, or tanks, or any combination thereof, to the process system. [55:7.9.3.4.3.2(D)]

(E) Piping System Accessibility. Piping systems shall be designed to provide for readily accessible manual shutdown controls. [55:7.9.3.4.3.2(E)]

63.3.9.3.5 Rate of Release. The time release shall be in accordance with Table 63.3.9.3.5 for the type of container indicated. [55:7.9.3.5]

63.3.9.3.6* Maximum Flow Rate of Release.

63.3.9.3.6.1 For portable containers, cylinders, and tanks, the maximum flow rate of release shall be calculated based on assuming the total release from the cylinder or tank within the time specified. [55:7.9.3.6.1]

Table 63.3.9.3.5 Rates of Release

Container Type	Nonliquefied Gases (min)	Liquefied Gases (min)
Cylinders without restrictive flow orifices	5	30
Portable tanks without restrictive flow orifices	40	240
All others	Based on peak flow from maximum valve orifice	Based on peak flow from maximum valve orifice

[55:Table 7.9.3.5]

63.3.9.3.6.2 When portable containers, cylinders, or tanks are equipped with reduced flow orifices, the worst-case rate of release shall be determined by the maximum achievable flow from the valve determined based on the following formula:

$$\text{CFM} = (767 \times A \times P)\frac{\left(\frac{28.96}{MW}\right)^{1/2}}{60}$$

where:

CFM = standard cubic feet per minute of gas of concern under flow conditions

A = area of orifice in square inches *(See Table A.63.3.9.3.6 for areas of typical restricted flow orifices.)*

P = supply pressure of gas at NTP in pounds per square inch absolute

MW = molecular weight [55:7.9.3.6.2]

63.3.9.3.6.3 For mixtures, the average of molecular weights shall be used. [55:7.9.3.6.3]

63.3.9.4 Leaking Containers, Cylinders, and Tanks. When containers, cylinders, or tanks are used outdoors, in excess of the quantities specified in the column for unsprinklered areas (unprotected by gas cabinets or exhausted enclosures) in Table 63.2.3.1, a gas cabinet, exhausted enclosure, or containment vessel or system shall be provided to control leaks from leaking containers, cylinders, and tanks in accordance with 7.9.4.1 through 7.9.4.2.3 of NFPA 55. [55:7.9.4]

63.3.9.4.1 Gas Cabinets or Exhausted Enclosures. Where gas cabinets or exhausted enclosures are provided to handle leaks from containers, cylinders, or tanks, exhaust ventilation shall be provided that is directed to a treatment system in accordance with the provisions of 7.9.3 of NFPA 55. [55:7.9.4.1]

63.3.9.4.2 Containment Vessels or Systems. Where containment vessels or containment systems are provided, they shall comply with the requirements of 7.9.4.2.1 through 7.9.4.2.3 of NFPA 55. [55:7.9.4.2]

63.3.9.4.2.1 Performance. Containment vessels or containment systems shall be capable of fully containing or terminating a release. [55:7.9.4.2.1]

63.3.9.4.2.2 Personnel. Trained personnel capable of operating the containment vessel or containment system shall be available at an approved location. [55:7.9.4.2.2]

63.3.9.4.2.3 Location. Containment vessels or systems shall be capable of being transported to the leaking cylinder, container, or tank. [55:7.9.4.2.3]

63.3.9.5 Emergency Power.

63.3.9.5.1 General. Emergency power shall comply with the requirements of 7.9.5 of NFPA 55 in accordance with NFPA 70. [55:7.9.5.1]

63.3.9.5.2 Alternative to Emergency Power. Emergency power shall not be required where fail-safe engineering is provided for mechanical exhaust ventilation, treatment systems, and temperature control, and standby power is provided to alternative systems that utilize electrical energy. [55:7.9.5.2]

63.3.9.5.3 Where Required. Emergency power shall be provided for the following systems:

(1) Exhaust ventilation
(2) Treatment system
(3) Gas detection system
(4) Temperature control system
(5) Required alarm systems [55:7.9.5.3]

63.3.9.5.4 Level. Emergency power systems shall comply with the requirements for a Level 2 system in accordance with NFPA 110. [55:7.9.5.4]

63.3.9.6 Gas Detection. Except as provided in 7.9.6.1 of NFPA 55, a continuous gas detection system in accordance with the requirements of 7.9.6.2 through 7.9.6.6 of NFPA 55 shall be provided for the indoor storage or use of toxic or highly toxic compressed gases. [55:7.9.6]

63.3.9.6.1 Where Gas Detection Is Not Required. A gas detection system shall not be required for toxic gases where the physiological warning properties for the gas are at a level below the accepted permissible exposure limit or ceiling limit for the gas. [55:7.9.6.1]

63.3.9.6.2 Local Alarm. The gas detection system shall initiate a local alarm that is both audible and visible. [55:7.9.6.2]

63.3.9.6.3 Alarm Monitored. The gas detection system shall transmit a signal to a constantly attended control station for quantities exceeding one toxic or highly toxic compressed gas cylinder. [55:7.9.6.3]

63.3.9.6.4 Automatic Shutdown.

63.3.9.6.4.1 Activation of the gas detection system shall automatically shut off the flow of gas related to the system being monitored. [55:7.9.6.4.1]

63.3.9.6.4.2 An automatic shutdown shall not be required for reactors utilized for the production of toxic or highly toxic gases when such reactors are operated at pressures less than 15 psi (gauge pressure of 103.4 kPa), constantly attended, and provided with readily accessible emergency shutoff valves. [55:7.9.6.4.2]

63.3.9.6.5 Detection Points. Detection shall be provided at the locations specified in 7.9.6.5.1 through 7.9.6.5.4 of NFPA 55. [55:7.9.6.5]

63.3.9.6.5.1 Treatment System Discharge. Detection shall be provided at the discharge from the treatment system. [55:7.9.6.5.1]

63.3.9.6.5.2 Point of Use. Detection shall be provided in the room or area in which the gas is used. [55:7.9.6.5.2]

63.3.9.6.5.3 Source. Detection shall be provided at the source container, cylinder, or tank used for delivery of the gas to the point of use. [55:7.9.6.5.3]

63.3.9.6.5.4 Storage. Detection shall be provided in the room or area in which the gas is stored. [55:7.9.6.5.4]

63.3.9.6.6 Level of Detection. The gas detection system shall detect the presence of gas at or below the permissible exposure limit or ceiling limit of the gas for those points identified in 7.9.6.5.2 and 7.9.6.5.3 of NFPA 55, and at not less than one-half the IDLH level for points identified in 7.9.6.5.1 of NFPA 55. [55:7.9.6.6]

63.3.9.7 Automatic Smoke Detection System. An automatic smoke detection system shall be provided for the indoor storage or use of highly toxic compressed gases in accordance with *NFPA 72*. [55:7.9.7]

63.3.10 Unstable Reactive Gases (Nondetonable). The storage or use of unstable reactive (nondetonable) gases exceeding the quantity thresholds for gases requiring special provisions as specified in Table 63.2.3.1 shall be in accordance with Chapters 1 through 6 and Sections 7.1 through 7.3 and Section 7.10 of NFPA 55. [55:7.10]

63.3.10.1 Distances to Exposures for Class 2.

63.3.10.1.1 The outdoor storage or use of unstable reactive Class 2 compressed gas shall not be within 75 ft (23 m) of buildings, lot lines, streets, alleys, or public ways or means of egress. [55:7.10.1.1]

63.3.10.1.2 A 2-hour fire barrier wall without openings or penetrations, and extending not less than 30 in. (762 mm) above and to the sides of the storage or use area, shall be permitted in lieu of the 75 ft (23 m) distance required by 7.10.1.1 of NFPA 55. [55:7.10.1.2]

63.3.10.1.2.1 The fire barrier wall shall be either an independent structure or the exterior wall of the building. [55:7.10.1.2.1]

63.3.10.1.2.2 The 2-hour fire barrier shall be located at least 5 ft (1.5 m) from any exposure. [55:7.10.1.2.2]

63.3.10.1.2.3 The 2-hour fire barrier shall not have more than two sides at approximately 90 degree (1.57 rad) directions, or not more than three sides with connecting angles of approximately 135 degrees (2.36 rad). [55:7.10.1.2.3]

63.3.10.2 Distances to Exposures for Class 3.

63.3.10.2.1 The outdoor storage or use of unstable reactive Class 3 (nondetonable) compressed gas shall not be within 75 ft (23 m) of buildings, lot lines, streets, alleys, or public ways or means of egress. [55:7.10.2.1]

63.3.10.2.2 A 2-hour fire barrier wall without openings or penetrations, and extending not less than 30 in. (762 mm) above and to the sides of the storage or use area, that interrupts the line of sight between the storage or use and the exposure shall be permitted in lieu of the 75 ft (23 m) distance required by 7.10.2.1 of NFPA 55. [55:7.10.2.2]

63.3.10.2.2.1 The fire barrier wall shall be either an independent structure or the exterior wall of the building adjacent to the storage or use area. [55:7.10.2.2.1]

63.3.10.2.2.2 The 2-hour fire barrier shall be located at least 5 ft (1.5 m) from any exposure. [55:7.10.2.2.2]

63.3.10.2.2.3 The 2-hour fire barrier shall not have more than two sides at approximately 90 degree (1.57 rad) directions, or more than three sides with connecting angles of approximately 135 degrees (2.36 rad). [55:7.10.2.2.3]

63.3.10.2.2.4 The fire barrier shall be either an independent structure or the exterior wall of the building adjacent to the storage or use area. [55:7.10.2.2.4]

63.3.10.3 Storage Configuration. Unstable reactive Class 3 compressed gases stored in cylinders, containers, or tanks shall be arranged to limit individual groups of cylinders, containers, or tanks to areas not exceeding 100 ft^2 (9.3 m^2). Multiple areas shall be separated by aisles. Aisle widths shall not be less than the height of the cylinders, containers, or tanks or 4 ft (1.2 m), whichever is greater. [55:7.10.3]

63.3.10.4 Basements. Unstable reactive compressed gases shall not be stored in basements. [55:7.10.4]

63.3.10.5 Unstable Reactive Gases (Detonable).

63.3.10.5.1 Storage or Use. The storage or use of unstable reactive (detonable) gases exceeding the quantity thresholds for gases requiring special provisions as specified in Table 63.2.3.1 shall be in accordance with Chapters 1 through 6, Sections 7.1 through 7.3, and 7.10.5 of NFPA 55. [55:7.10.5.1]

63.3.10.5.2 Location. The location of storage areas shall be determined based on the requirements of the building code for explosive materials. [55:7.10.5.2]

63.4 Cryogenic Fluids.

63.4.1 General.

63.4.1.1 Storage, use, and handling of cryogenic fluids shall be in accordance with Chapters 1 through 6 and Chapter 8 of NFPA 55. [55:8.1.1]

63.4.2* Containers — Design, Construction, and Maintenance. Containers employed for the storage or use of cryogenic fluids shall be designed, fabricated, tested, marked (stamped), and maintained in accordance with DOT regulations; Transport Canada (TC) *Transportation of Dangerous Goods Regulations*; the ASME *Boiler and Pressure Vessel Code*, "Rules for the Construction of Unfired Pressure Vessels"; or regulations of other administering agencies. [55:8.2]

63.4.2.1 Nonstandard Containers.

63.4.2.1.1 Containers, equipment, and devices that are not in compliance with recognized standards for design and construction shall be permitted if approved by the AHJ upon presentation of evidence that they are designed and constructed for safe operation. [55:8.2.1.1]

63.4.2.1.2 The following data shall be submitted to the AHJ with reference to the deviation from the standard with the application for approval:

(1) Type and use of container, equipment, or device
(2) Material to be stored, used, or transported
(3) Description showing dimensions and materials used in construction
(4) Design pressure, maximum operating pressure, and test pressure
(5) Type, size, and setting of pressure-relief devices [55:8.2.1.2]

63.4.2.2 Concrete Containers.

63.4.2.2.1 Concrete containers shall be built in accordance with the building code. [55:8.2.2.1]

63.4.2.2.2 Barrier materials and membranes used in connection with concrete, but not functioning structurally, shall be materials prescribed by nationally recognized standards. [**55:**8.2.2.2]

63.4.2.3 Foundations and Supports. Stationary tanks shall be provided with concrete or masonry foundations or structural steel supports on firm concrete or masonry foundations, and the requirements of 8.2.3.1 through 8.2.3.5 of NFPA 55 also shall apply. [**55:**8.2.3]

63.4.2.3.1 Excessive Loads. Stationary tanks shall be supported to prevent the concentration of excessive loads on the supporting portion of the shell. [**55:**8.2.3.1]

63.4.2.3.2 Expansion and Contraction. Foundations for horizontal containers shall be constructed to accommodate expansion and contraction of the container. [**55:**8.2.3.2]

63.4.2.3.3 Support of Ancilliary Equipment. Foundations shall be provided to support the weight of vaporizers and/or heat exchangers. [**55:**8.2.3.3]

63.4.2.3.4 Temperature Effects. Where drainage systems, terrain, or surfaces beneath stationary tanks are arranged in a manner that can subject stationary tank foundations or supports to temperatures below –130°F (–90°C), the foundations or supports shall be constructed of materials that are capable of withstanding the low-temperature effects of cryogenic fluid spillage. [**55:**8.2.3.4]

63.4.2.3.5 Corrosion Protection. Portions of stationary tanks in contact with foundations or saddles shall be painted to protect against corrosion. [**55:**8.2.3.5]

63.4.2.4 Pressure-Relief Devices.

63.4.2.4.1 General.

63.4.2.4.1.1 Pressure-relief devices shall be provided to protect containers and systems containing cryogenic fluids from rupture in the event of overpressure. [**55:**8.2.4.1.1]

63.4.2.4.1.2 Pressure-relief devices shall be designed in accordance with CGA S-1.1, *Pressure Relief Device Standards — Part 1 — Cylinders for Compressed Gases,* and CGA S-1.2, *Pressure Relief Device Standards – Part 2 – Cargo and Portable Tanks for Compressed Gases,* for portable tanks and CGA S-1.3, *Pressure Relief Device Standards – Part 3 — Stationary Storage Containers for Compressed Gases,* for stationary tanks. [**55:**8.2.4.1.2]

63.4.2.4.2 Containers Open to the Atmosphere. Portable containers that are open to the atmosphere and are designed to contain cryogenic fluids at atmospheric pressure shall not be required to be equipped with pressure-relief devices. [**55:**8.2.4.2]

63.4.2.4.3 Equipment Other than Containers. Heat exchangers, vaporizers, insulation casings surrounding containers, vessels, and coaxial piping systems in which liquefied cryogenic fluids could be trapped due to leakage from the primary container shall be provided with a pressure-relief device. [**55:**8.2.4.3]

63.4.2.4.4 Sizing.

63.4.2.4.4.1 Pressure-relief devices shall be sized in accordance with the specifications to which the container was fabricated. [**55:**8.2.4.4.1]

63.4.2.4.4.2 The pressure-relief device shall have the capacity to prevent the maximum design pressure of the container or system from being exceeded. [**55:**8.2.4.4.2]

63.4.2.4.5 Accessibility. Pressure-relief devices shall be located such that they are accessible for inspection and repair. [**55:**8.2.4.5]

63.4.2.4.6 Arrangement.

63.4.2.4.6.1 Pressure-Relief Devices. Pressure-relief devices shall be arranged to discharge unobstructed to the open air in such a manner as to prevent impingement of escaping gas on personnel, containers, equipment, and adjacent structures or its entrance into enclosed spaces. [**55:**8.2.4.6.1]

63.4.2.4.6.2 Portable Containers with Volume Less than 2 ft^3 (0.057 m^3).

63.4.2.4.6.2.1 The arrangement of the discharge from pressure-relief devices from DOT-specified containers with an internal water volume of 2.0 ft^3 (0.057 m^3) or less shall be incorporated in the design of the container. [**55:**8.2.4.6.2.1]

63.4.2.4.6.2.2 Additional safeguards regarding placement or arrangement shall not be required. [**55:**8.2.4.6.2.2]

63.4.2.4.7 Shutoffs Between Pressure-Relief Devices and Containers.

63.4.2.4.7.1 General. Shutoff valves installed between pressure-relief devices and containers shall be in accordance with 8.2.4.7 of NFPA 55. [**55:**8.2.4.7.1]

63.4.2.4.7.2 Location. Shutoff valves shall not be installed between pressure-relief devices and containers unless the valves or their use meets the requirements of 8.2.4.7.2.1 or 8.2.4.7.2.2 of NFPA 55. [**55:**8.2.4.7.2]

63.4.2.4.7.2.1 Security. Shutoff valves shall be of a locking type, and their use shall be limited to service-related work performed by the supplier under the requirements of the ASME *Boiler and Pressure Vessel Code.* [**55:**8.2.4.7.2.1]

63.4.2.4.7.2.2 Multiple Pressure-Relief Devices. Shutoff valves controlling multiple pressure-relief devices on a container shall be installed so that either the type of valve installed or the arrangement provides the full required flow through the minimum number of required relief devices at all times. [**55:**8.2.4.7.2.2]

63.4.2.4.8 Temperature Limits. Pressure-relief devices shall not be subjected to cryogenic fluid temperatures except when operating. [**55:**8.2.4.8]

63.4.3 Pressure-Relief Vent Piping.

63.4.3.1 General. Pressure-relief vent piping systems shall be constructed and arranged to direct the flow of gas to a safe location and in accordance with Section 8.3 of NFPA 55. [**55:**8.3.1]

63.4.3.2 Sizing. Pressure-relief device vent piping shall have a cross-sectional area not less than that of the pressure-relief device vent opening and shall be arranged so as not to restrict the flow of escaping gas. [**55:**8.3.2]

63.4.3.3 Arrangement. Pressure-relief device vent piping and drains in vent lines shall be arranged so that escaping gas discharges unobstructed to the open air and does not impinge on personnel, containers, equipment, and adjacent structures or enter enclosed spaces. [**55:**8.3.3]

63.4.3.4 Installation. Pressure-relief device vent lines shall be installed in a manner that excludes or removes moisture and condensation to prevent malfunction of the pressure-relief device due to freezing or ice accumulation. [**55:**8.3.4]

63.4.3.5 Overfilling. Controls shall be provided to prevent overfilling of stationary containers. [55:8.3.5]

63.4.4 Marking.

63.4.4.1 General. Cryogenic containers and systems shall be marked in accordance with nationally recognized standards and in accordance with Section 8.4 of NFPA 55. [55:8.4.1]

63.4.4.1.1 Portable Containers.

63.4.4.1.1.1 Portable cryogenic containers shall be marked in accordance with CGA C-7, *Guide to the Preparation of Precautionary Labeling and Marking of Compressed Gas Containers.* [55:8.4.1.1.1]

63.4.4.1.1.2* All DOT-4L/TC-4LM liquid cylinders shall have product identification visible from all directions with minimum 2 in. (51 mm) high letters. [55:8.4.1.1.2]

63.4.4.1.2 Stationary Tanks. Stationary tanks shall be marked in accordance with NFPA 704. [55:8.4.1.2]

63.4.4.1.3 Identification Signs. Visible hazard identification signs shall be provided in accordance with NFPA 704 at entrances to buildings or areas in which cryogenic fluids are stored, handled, or used. [55:8.4.1.3]

63.4.4.2 Identification of Contents. Stationary containers shall be placarded with the identity of their contents to indicate the name of the material contained. [55:8.4.2]

63.4.4.3 Container Specification. Stationary containers shall be marked with the manufacturing specification and maximum allowable working pressure on a permanent nameplate. [55:8.4.3]

63.4.4.3.1 The nameplate shall be installed on the container in an accessible location. [55:8.4.3.1]

63.4.4.3.2 The nameplate shall be marked in accordance with nationally recognized standards. [55:8.4.3.2]

63.4.4.4 Identification of Container Connections.

63.4.4.4.1 Container inlet and outlet connections, liquid-level limit controls, valves, and pressure gauges shall be identified using one of the methods prescribed by 63.4.4.4.1.1 through 63.4.4.4.1.2.1. [55:8.4.4.1]

63.4.4.4.1.1 They shall be marked with a permanent tag or label identifying their function. [55:8.4.4.1.1]

63.4.4.4.1.2 They shall be identified by a schematic drawing that indicates their function and designates whether they are connected to the vapor or liquid space of the container. [55:8.4.4.1.2]

63.4.4.4.1.2.1 When a schematic drawing is provided, it shall be attached to the container and maintained in a legible condition. [55:8.4.4.1.2.1]

63.4.4.5 Identification of Piping Systems. Piping systems shall be identified in accordance with ASME A13.1, *Scheme for the Identification of Piping Systems.* [55:8.4.5]

63.4.4.6 Identification of Emergency Shutoff Valves. Emergency shutoff valves on stationary containers shall be identified, visible, and indicated by means of a sign. [55:8.4.6]

63.4.5 Security.

63.4.5.1 General. Cryogenic containers and systems shall be secured against accidental dislodgement and against access by unauthorized personnel in accordance with 63.4.5. [55:8.5.1]

63.4.5.2 Security of Areas. Areas used for the storage of containers and systems shall be secured against unauthorized entry. [55:8.5.2]

63.4.5.3 Securing of Containers. Stationary containers shall be secured to foundations in accordance with the building code. [55:8.5.3]

63.4.5.3.1 Portable containers subject to shifting or upset shall be secured. [55:8.5.3.1]

63.4.5.3.2 Nesting shall be permitted as a means of securing portable containers. [55:8.5.3.2]

63.4.5.4 Securing of Vaporizers. Vaporizers, heat exchangers, and similar equipment shall be secured to foundations, and their connecting piping shall be designed and constructed to provide for the effects of expansion and contraction due to temperature changes. [55:8.5.4]

63.4.5.5 Physical Protection. Containers, piping, valves, pressure-relief devices, regulating equipment, and other appurtenances shall be protected against physical damage and tampering. [55:8.5.5]

63.4.6 Separation from Hazardous Conditions.

63.4.6.1 General. Cryogenic containers and systems in storage or use shall be separated from materials and conditions that present exposure hazards to or from each other in accordance with 63.4.6. [55:8.6.1]

63.4.6.2 Stationary Cryogenic Containers. Stationary containers located outdoors shall be separated from exposure hazards in accordance with the minimum separation distances indicated in Table 63.4.6.2. [55:8.6.2]

Table 63.4.6.2 Minimum Separation Distance Between Stationary Cryogenic Containers and Exposures

Exposure	Minimum Distance ft	Minimum Distance m
(1) Buildings, regardless of construction type	1	0.3
(2) Wall openings	1	0.3
(3) Air intakes	10	3.1
(4) Property lines	5	1.5
(5) Places of public assembly	50	15
(6) Nonambulatory patient areas	50	15
(7) Combustible materials, such as paper, leaves, weeds, dry grass, or debris	15	4.5
(8) Incompatible hazardous materials	20	6.1

[55: Table 8.6.2]

63.4.6.2.1 Fire Barriers. A 2-hour fire barrier wall shall be permitted in lieu of the distances specified by Table 63.4.6.2, for items 1, 4, 7, and 8, when in accordance with the provisions of 63.4.6.2.1.1 through 63.4.6.2.1.4. [55:8.6.2.1]

63.4.6.2.1.1 The fire barrier wall shall be without openings or penetrations. [55:8.6.2.1.1]

63.4.6.2.1.1.1 Penetrations of the fire barrier wall by conduit or piping shall be permitted provided that the penetration is protected with a fire stop system in accordance with the building code. [**55:**8.6.2.1.1.1]

63.4.6.2.1.2 The fire barrier wall shall be either an independent structure or the exterior wall of the building adjacent to the storage system. [**55:**8.6.2.1.2]

63.4.6.2.1.3 The fire barrier wall shall be located not less than 5 ft (1.5 m) from any exposure. [**55:**8.6.2.1.3]

63.4.6.2.1.4 The fire barrier wall shall not have more than two sides at 90 degree (1.57 rad) directions, or not more than three sides with connecting angles of 135 degrees (2.36 rad). [**55:**8.6.2.1.4]

63.4.6.2.1.5 Where the requirement of 63.4.6.2.1.4 is met, the bulk system shall be a minimum distance of 1 ft (0.3 m) from the fire barrier wall. [**55:**8.6.2.1.5]

63.4.6.2.2 The distances shown in items 1, 4, 7, and 8 of Table 63.4.6.2 shall not apply where a fire barrier wall having a minimum fire resistance of 2 hours interrupts the line of sight between uninsulated portions of the bulk storage system and the exposure. [**55:**8.6.2.2]

63.4.6.2.3 Point of Fill Connections. Remote transfer points and fill connection points shall not be positioned closer to exposures than the minimum distances required for stationary containers as indicated in Table 63.4.6.2. [**55:**8.6.2.3]

63.4.6.2.4 Surfaces Beneath Containers. The surface of the area on which stationary containers are placed, including the surface of the area located below the point at which connections are made for the purpose of filling such containers, shall be compatible with the fluid in the container. [**55:**8.6.2.4]

63.4.6.3 Portable Cryogenic Containers. Portable containers located outdoors shall be separated from exposure hazards in accordance with Table 63.4.6.3. [**55:**8.6.3]

63.4.6.3.1 Fire Barriers. A 2-hour fire barrier wall shall be permitted in lieu of the distances specified by Table 63.4.6.3 when in accordance with the provisions of 63.4.6.3.1.1 through 63.4.6.3.1.4. [**55:**8.6.3.1]

Table 63.4.6.3 Minimum Separation Distance Between Portable Cryogenic Containers and Exposures

	Minimum Distance	
Exposure	ft	m
Building exits	10	3.1
Wall openings	10	3.1
Air intakes	10	3.1
Property lines	5	1.5
Room or area exits	3	0.9
Combustible materials, such as paper, leaves, weeds, dry grass, or debris	15	4.5
Incompatible hazardous materials	20	6.1

[**55:**Table 8.6.3]

63.4.6.3.1.1 The fire barrier wall shall be without openings or penetrations. [**55:**8.6.3.1.1]

63.4.6.3.1.1.1 Penetrations of the fire barrier wall by conduit or piping shall be permitted provided that the penetration is protected with a fire stop system in accordance with the building code. [**55:**8.6.3.1.1.1]

63.4.6.3.1.2 The fire barrier wall shall be either an independent structure or the exterior wall of the building adjacent to the storage system. [**55:**8.6.3.1.2]

63.4.6.3.1.3 The fire barrier wall shall be located not less than 5 ft (1.5 m) from any exposure. [**55:**8.6.3.1.3]

63.4.6.3.1.4 The fire barrier wall shall not have more than two sides at approximately 90 degree (1.57 rad) directions, or not more than three sides with connecting angles of approximately 135 degrees (2.36 rad). [**55:**8.6.3.1.4]

63.4.7 Electrical Wiring and Equipment.

63.4.7.1 General. Electrical wiring and equipment shall be in accordance with NFPA 70 and 63.4.7. [**55:**8.7.1]

63.4.7.2 Location. Containers and systems shall not be located where they could become part of an electrical circuit. [**55:**8.7.2]

63.4.7.3 Electrical Ground and Bonding. Containers and systems shall not be used for electrical grounding. [**55:**8.7.3]

63.4.7.3.1 When electrical grounding and bonding is required, the system shall be in accordance with NFPA 70. [**55:**8.7.3.1]

63.4.7.3.2 The grounding system shall be protected against corrosion, including corrosion caused by stray electrical currents. [**55:**8.7.3.2]

63.4.8 Service and Repair. Service, repair, modification, or removal of valves, pressure-relief devices, or other container appurtenances shall be in accordance with nationally recognized standards. [**55:**8.8]

63.4.8.1 Containers. Containers that have been removed from service shall be handled in an approved manner. [**55:**8.8.1]

63.4.8.1.1 Testing. Containers out of service in excess of 1 year shall be inspected and tested as required under 63.4.8.1.2. [**55:**8.8.1.1]

63.4.8.1.2 The pressure-relief devices shall be tested for operability and to determine if they are set at the relief pressure required by the tank design. [**55:**8.8.1.2]

63.4.8.2 Systems. Service and repair of containers or systems shall be performed by trained personnel in accordance with nationally recognized standards and with the permission of the container owner. [**55:**8.8.2]

63.4.9 Unauthorized Use. Containers shall not be used for any purpose other than to serve as a vessel for containing the product for which it is designated. [**55:**8.9]

63.4.10 Leaks, Damage, and Corrosion.

63.4.10.1 Leaking, damaged, or corroded containers shall be removed from service. [**55:**8.10.1]

63.4.10.2 Leaking, damaged, or corroded systems shall be replaced, repaired, or removed from service. [**55:**8.10.2]

63.4.11 Lighting. Where required by the AHJ, lighting, including emergency lighting, shall be provided for fire appliances

and operating facilities such as walkways, control valves, and gates ancillary to stationary containers. [55:8.11]

63.4.12 Storage.

63.4.12.1 Indoor Storage.

63.4.12.1.1 Installation. Stationary containers indoors shall be installed in accordance with Chapters 9 and 11 of NFPA 55 or CGA P-18, *Standard for Bulk Inert Gas Systems at Consumer Sites.* [55:8.12.1.1]

63.4.12.1.2 Stationary Containers. Stationary containers shall be in accordance with 63.4.2. [55:8.12.1.2]

63.4.12.1.3 Cryogenic Fluids. Cryogenic fluids in stationary or portable containers stored indoors shall be stored in buildings, rooms, or areas constructed in accordance with the building code. [55:8.12.1.3]

63.4.12.1.4 Ventilation. Ventilation shall be in accordance with 63.2.16. [55:8.12.1.4]

63.4.12.2 Outdoor Storage.

63.4.12.2.1 General. Cryogenic fluids in stationary or portable containers stored outdoors shall be in accordance with 63.4.12.2. [55:8.12.2.1]

63.4.12.2.2 Access. Stationary containers shall be located to provide access by mobile supply equipment and authorized personnel. [55:8.12.2.2]

63.4.12.2.3 Diked Areas Containing Other Hazardous Materials. Containers of cryogenic fluids shall not be located within diked areas with other hazardous materials. [55:8.12.2.3]

63.4.12.2.4 Areas Subject to Flooding. Stationary containers located in areas subject to flooding shall be securely anchored or elevated to prevent the containers from separating from foundations or supports. [55:8.12.2.4]

63.4.12.2.5 Drainage.

63.4.12.2.5.1 The area surrounding stationary and portable containers shall be provided with a means to prevent accidental discharge of fluids from endangering personnel, containers, equipment, and adjacent structures and from entering enclosed spaces in accordance with this *Code.* [55:8.12.2.5.1]

63.4.12.2.5.2 The stationary container shall not be placed where spilled or discharged fluids will be retained around the container. [55:8.12.2.5.2]

63.4.12.2.5.3 The provisions of 63.4.12.2.5.2 shall be permitted to be altered or waived where the AHJ determines that the container does not constitute a hazard after consideration of special features such as the following:

(1) Crushed rock utilized as a heat sink
(2) Topographical conditions
(3) Nature of occupancy
(4) Proximity to structures on the same or adjacent property
(5) Capacity and construction of containers and character of fluids to be stored [55:8.12.2.5.3]

63.4.12.2.5.4 The grade for a distance of not less than 50 ft (15 m) from where cryogenic fluid storage or delivery systems are installed shall be higher than the grade on which flammable or combustible liquids are stored or used. [55:8.12.2.5.4]

63.4.12.2.5.4.1* When the grade differential between the storage or delivery system and the flammable or combustible liquids storage or use area is not in accordance with 63.4.12.2.5.4, diversion curbs or other means of drainage control shall be used to divert the flow of flammable or combustible liquids away from the cryogenic system. The means of drainage control shall prevent the flow of flammable or combustible liquid to a distance not less than 50 ft from all parts of the delivery system. [55:8.12.2.5.4.1]

63.4.12.2.6 Outdoor Installations.

63.4.12.2.6.1 Enclosed Courts. Stationary containers shall not be installed within enclosed courts. [55:8.12.2.6.1]

63.4.12.2.6.2* Courts. Stationary containers shall be sited so that they are open to the surrounding environment except that encroachment by building walls of unlimited height shall be permitted when in accordance with the distances specified by Table 63.4.6.2 or the material-specific tables in Chapters 9 through 11 of NFPA 55. [55:8.12.2.6.2]

63.4.12.2.6.2.1* When exterior building walls encroach on the system to form a court, the system shall be located at a distance not less than the height of the wall from at least two court walls. [55:8.12.2.6.2.1]

63.4.12.2.6.2.2 The required distance between the exterior walls of the building forming the court and the container shall be determined independently without regard to fire barrier walls used to allow encroachment by fire exposure hazards. [55:8.12.2.6.2.2]

63.4.12.2.6.3 Fire Department Access. Fire department access roadways or other approved means shall be in accordance with Section 18.2. [55:8.12.2.6.3]

63.4.13 Use and Handling.

63.4.13.1 General. Use and handling of containers and systems shall be in accordance with 63.4.13. [55:8.13.1]

63.4.13.1.1 Operating Instructions. Operating instructions shall be provided for installations that require the operation of equipment. [55:8.13.1.1]

63.4.13.1.2 Attended Delivery. A qualified person shall be in attendance at all times cryogenic fluid is transferred from mobile supply units to a storage system. [55:8.13.1.2]

63.4.13.1.3 Inspection.

63.4.13.1.3.1 Cryogenic fluid storage systems shall be inspected annually and maintained by a qualified representative of the equipment owner. [55:8.13.1.3.1]

63.4.13.1.3.2 A record of the inspection shall be prepared and provided to the user or the AHJ upon request. [55:8.13.1.3.2]

63.4.13.1.4 Design.

63.4.13.1.4.1 Cryogenic fluid systems shall be designed for the use intended. [55:8.13.1.4.1]

63.4.13.1.4.2 Where nationally recognized good practices or standards have been established for the process employed, such practices and standards shall be followed. [55:8.13.1.4.2]

63.4.13.1.4.3 Piping Systems. Piping and tubing conveying cryogenic fluids, including valves, joints, and fittings, shall be installed in accordance with nationally recognized standards and shall be in accordance with 63.4.13.2. [55:8.13.1.4.3]

63.4.13.2 Piping and Appurtenances.

63.4.13.2.1 Piping systems shall be designed for the use intended through the full range of pressure and temperature to which they will be subjected. [55:8.13.2.1]

63.4.13.2.2 Piping systems shall be designed and constructed to allow for expansion, contraction, vibration, settlement, and fire exposure. [**55:**8.13.2.2]

63.4.13.3 Joints. Joints on container piping and tubing shall be threaded, welded, silver-brazed, or flanged. [**55:**8.13.3]

63.4.13.4 Valves and Accessory Equipment. Valves and accessory equipment shall be acceptable for the intended use at the temperatures of the application and shall be designed and constructed to withstand the maximum pressure at the minimum temperature to which they will be subjected. [**55:**8.13.4]

63.4.13.5 Shutoff Valves on Containers. Shutoff valves shall be provided on all container connections, except for pressure-relief devices. [**55:**8.13.5]

63.4.13.5.1 Shutoff valves for containers with multiple pressure-relief devices shall be permitted in accordance with 63.4.2.4.7. [**55:**8.13.5.1]

63.4.13.5.2 Shutoff valves shall be accessible and located as close as practical to the container. [**55:**8.13.5.2]

63.4.13.6 Shutoff Valves on Piping.

63.4.13.6.1 Shutoff valves shall be installed in piping containing cryogenic fluids where needed to limit the volume of liquid discharged in the event of piping or equipment failure. [**55:**8.13.6.1]

63.4.13.6.2 Pressure-relief valves shall be installed where liquid can be trapped between shutoff valves in the piping system. *(See 63.4.2.4.)* [**55:**8.13.6.2]

63.4.13.7 Physical Protection and Support.

63.4.13.7.1 Aboveground piping systems shall be supported and protected from physical damage. [**55:**8.13.7.1]

63.4.13.7.2 Piping passing through walls shall be protected from mechanical damage. [**55:**8.13.7.2]

63.4.13.8 Corrosion Protection. Aboveground piping that is subject to corrosion shall be protected against corrosion. Belowground piping shall be protected against corrosion. [**55:**8.13.8]

63.4.13.9 Testing.

63.4.13.9.1 Piping systems shall be tested and proven free of leaks after installation as required by the standards to which they are designed and constructed. [**55:**8.13.9.1]

63.4.13.9.2 Test pressures shall not be less than 150 percent of the maximum allowable working pressure when hydraulic testing is conducted or 110 percent when testing is conducted pneumatically. [**55:**8.13.9.2]

63.4.13.10 Material-Specific Requirements.

63.4.13.10.1 Indoor Use. Indoor use of cryogenic fluids shall be in accordance with the material-specific provisions of Chapters 9 and 11 of NFPA 55 or with CGA P-18, *Standard for Bulk Inert Gas Systems at Consumer Sites,* and 63.4.13.2. [**55:**8.13.10.1]

63.4.13.10.2 Outdoor Use.

63.4.13.10.2.1 General. Outdoor use of cryogenic fluids shall be in accordance with the material-specific provisions of Chapters 9 and 11 of NFPA 55 or with CGA P-18, *Standard for Bulk Inert Gas Systems at Consumer Sites,* and 63.4.13.2. [**55:**8.13.10.2.1]

63.4.13.10.2.2 Separation. Distances from property lines, buildings, and exposure hazards shall be in accordance with Table 63.4.6.2 and Table 63.4.6.3 and the material-specific provisions of Chapters 9 and 11 of NFPA 55 or CGA P-18, *Standard for Bulk Inert Gas Systems at Consumer Sites.* [**55:**8.13.10.2.2]

63.4.13.10.2.3 Shutoff Valves.

63.4.13.10.2.3.1 Shutoff valves shall be provided to shut off the cryogenic fluid supply in case of emergency. [**55:**8.13.10.2.3.1]

63.4.13.10.2.3.2 A shutoff valve shall be located at the source of supply and at the point where the system enters the building. [**55:**8.13.10.2.3.2]

63.4.13.10.3 Filling and Dispensing.

63.4.13.10.3.1 General. Filling and dispensing of cryogenic fluids shall be in accordance with 63.4.13.1.2. [**55:**8.13.10.3.1]

63.4.13.10.3.2 Dispensing Areas. Dispensing of cryogenic fluids associated with physical or health hazards shall be conducted in approved locations. [**55:**8.13.10.3.2]

63.4.13.10.3.2.1 Indoor Dispensing Areas. Dispensing indoors shall be conducted in areas constructed in accordance with the building code. [**55:**8.13.10.3.2.1]

63.4.13.10.3.2.2 Ventilation. Indoor areas in which cryogenic fluids are dispensed shall be ventilated in accordance with the requirements of 63.2.16 and the mechanical code. [**55:**8.13.10.3.2.2]

63.4.13.10.3.2.3 Piping Systems. Piping systems utilized for filling or dispensing of cryogenic fluids shall be designed and constructed in accordance with 63.4.13.2. [**55:**8.13.10.3.2.3]

63.4.13.10.3.3 Vehicle Loading and Unloading Areas. Loading or unloading areas shall be constructed in accordance with the requirements of Chapter 9 for liquid oxygen and Chapter 11 for liquid hydrogen of NFPA 55 or CGA P-18, *Standard for Bulk Inert Gas Systems at Consumer Sites,* for inert cryogenic fluids, as applicable. [**55:**8.13.10.3.3]

63.4.13.10.3.4 Overfilling. Controls shall be provided to prevent overfilling of stationary containers during filling operations. [**55:**8.13.10.3.4]

63.4.13.10.4 Handling.

63.4.13.10.4.1 Applicability. Handling of cryogenic containers shall be in accordance 63.4.13.10.4. [**55:**8.13.10.4.1]

63.4.13.10.4.2 Carts and Trucks.

63.4.13.10.4.2.1 Cryogenic containers shall be moved using an approved method. [**55:**8.13.10.4.2.1]

63.4.13.10.4.2.2 Where cryogenic containers are moved by hand cart, hand truck, or other mobile device, that device shall be designed for the secure movement of the container. [**55:**8.13.10.4.2.2]

63.4.13.10.4.3 Design. Carts and trucks used to transport cryogenic containers shall be designed to provide a stable base for the commodities to be transported and shall have a means of restraining containers to prevent accidental dislodgement. [**55:**8.13.10.4.3]

63.4.13.10.4.4 Closed Containers.

63.4.13.10.4.4.1 Pressurized containers shall be closed while transported. [**55:**8.13.10.4.4.1]

63.4.13.10.4.4.2 Containers designed for use at atmospheric conditions shall be transported with appropriate loose-fitting covers in place to prevent spillage. [**55:**8.13.10.4.4.2]

63.5 Bulk Oxygen Systems. Bulk oxygen systems shall comply with NFPA 55.

63.6 Gaseous Hydrogen Systems. Gaseous hydrogen systems shall comply with NFPA 55.

63.7 Liquefied Hydrogen Systems. Liquefied hydrogen systems shall comply with NFPA 55.

Chapter 64 Corrosive Solids and Liquids

64.1 General. The storage, use, and handling of corrosive solids and liquids shall comply with the requirements of Chapter 60. The storage, use, and handling of corrosive solids and liquids in amounts exceeding the maximum allowable quantities permitted in control areas set forth in Chapter 60 shall comply with the requirements of this chapter.

64.2 Outdoor Storage.

64.2.1 Location. Outdoor storage of corrosive solids and liquids shall not be within 20 ft (6.1 m) of property lines, streets, alleys, public ways, means of egress to a public way, or buildings not used exclusively for the storage, distribution, or manufacturing of such materials, except as provided in 64.2.2.

64.2.2 Distance Reduction. An unpierced 2-hour fire-resistive wall extending not less than 30 in. (76 cm) above and to the side of the storage area shall be permitted in lieu of the distance specified in 64.2.1.

Chapter 65 Explosives, Fireworks, and Model Rocketry

65.1 General.

65.1.1 The storage, use, and handling of explosives, fireworks and model rocketry shall comply with the requirements of this chapter, NFPA standards referenced within this chapter and Section 60.1 and Section 60.2 of this *Code*.

65.1.2 Where the provisions of this chapter or NFPA standards referenced herein conflict with the provisions of Chapter 60, the provisions of this chapter and referenced NFPA standards shall apply.

65.2 Display Fireworks.

65.2.1 The construction, handling, and use of fireworks intended solely for outdoor display as well as the general conduct and operation of the display shall comply with the requirements of NFPA 1123, *Code for Fireworks Display*.

65.2.2 All storage of display fireworks shall comply with NFPA 1124, *Code for the Manufacture, Transportation, Storage, and Retail Sales of Fireworks and Pyrotechnic Articles*.

65.2.3 Permits. Permits, where required, shall comply with Section 1.12.

65.3 Pyrotechnics Before a Proximate Audience.

65.3.1 The use of pyrotechnic special effects in the performing arts in conjunction with theatrical, musical, or any similar productions before a proximate audience, performers, or support personnel shall comply with NFPA 1126, *Standard for the Use of Pyrotechnics before a Proximate Audience*.

65.3.2 Where any of the following conditions exist, they shall comply with NFPA 1126:

(1) Any indoor display of pyrotechnic special effects
(2) Any outdoor use of pyrotechnic special effects at distances less than those required by NFPA 1123
(3) The use of pyrotechnic special effects during any videotaping, audiotaping, or filming of any television, radio, or movie production if such production is before a proximate audience
(4) The rehearsal of any production in which pyrotechnic special effects are used

65.3.3 Permits. Permits, where required, shall comply with Section 1.12.

65.4 Flame Effects Before an Audience.

65.4.1 The use of flame effects before an audience shall comply with NFPA 160, *Standard for Flame Effects Before an Audience*.

65.4.2 Permits. Permits, where required, shall comply with Section 1.12.

65.5 Fireworks Manufacturing.

65.5.1 The manufacture, transportation, or storage of fireworks shall comply with NFPA 1124.

65.5.2 Permits. Permits, where required, shall comply with Section 1.12.

65.6 Model Rocketry. The design, construction, limitations of propellant mass and power, and reliability of model rocket motors and model rocket motor reloading kits and their components produced commercially for sale to or use by the public for purposes of education, recreation, and sporting competition, shall comply with NFPA 1122, *Code for Model Rocketry*.

65.7 Rocketry Manufacturing.

65.7.1 The manufacture of model rocket motors designed, sold, and used for the purpose of propelling recoverable aero models shall comply with NFPA 1125, *Code for the Manufacture of Model Rocket and High Power Rocket Motors*.

65.7.2 Permits. Permits, where required, shall comply with Section 1.12.

65.8 High Power Rocketry.

65.8.1 The design, construction, limitations of propellant mass and power, and reliability of all high-power rocket motors and motor components produced commercially for sale to or use by the certified user for education, recreation, and sporting competition shall comply with NFPA 1127, *Code for High Power Rocketry*.

65.8.2 Permits. Permits, where required, shall comply with Section 1.12.

65.9 Explosives.

65.9.1 The manufacture, transportation, storage, sale, and use of explosive materials shall comply with NFPA 495, *Explosive Materials Code*, and NFPA 498, *Standard for Safe Havens and Interchange Lots for Vehicles Transporting Explosives*.

65.9.2 Permits.

65.9.2.1 Permits, where required, shall comply with Section 1.12.

65.9.2.2 A separate permit shall be required to conduct blasting operations.

65.10 Ammonium Nitrate.

65.10.1 The storage of ammonium nitrate in the form of crystals, flakes, grains, or prills including fertilizer grade, dynamite grade, nitrous oxide grade, technical grade, and other mixtures containing 60 percent or more by weight of ammonium nitrate shall comply with NFPA 490, *Code for the Storage of Ammonium Nitrate.*

65.10.2 Permits. Permits, where required, shall comply with Section 1.12.

65.11 Sale, Handling, and Storage of Consumer Fireworks.

65.11.1* Applicability.

65.11.1.1* General Requirements. Retail sales of consumer fireworks in both new and existing buildings, structures, and facilities shall comply with the requirements of this section unless otherwise indicated. [**1124:**7.1.1]

65.11.1.1.1 New Facilities.

65.11.1.1.1.1 For the purpose of applying the requirements of this section, the following consumer fireworks retail sales (CFRS) facilities and stores shall be considered to be new:

(1) Permanent CFRS facilities and stores that are not initially occupied until after the effective date of this *Code*, unless plans are submitted and accepted for review, plans have been approved for construction, or a building permit has been issued prior to the effective date of this *Code*
(2) Permanent CFRS facilities and stores constructed prior to the effective date of this *Code* and in which the retail sales of consumer fireworks have not been conducted either seasonally or year-round within one year prior to the effective date of this *Code*
(3) Temporary CFRS facilities and stores [**1124:**7.1.1.1.1]

65.11.1.1.1.2 In a store where the area of the retail sales floor occupied by the retail displays of consumer fireworks is increased after the effective date of this *Code*, such that the area exceeds the limits specified in 65.11.5.1.1(1), the building shall be considered to be a new CFRS facility. [**1124:**7.1.1.1.2]

65.11.1.1.2 Existing Facilities. For the purpose of applying the requirements of this chapter, CFRS facilities and stores not considered to be new as specified in 65.11.1.1.1 shall be considered to be existing. [**1124:**7.1.1.2]

65.11.1.1.3 Minimum Requirements. Existing life safety features that do not meet the requirements for new buildings but that exceed the requirements for existing buildings shall not be further diminished. [**1124:**7.1.1.3]

65.11.1.1.4 Modernization or Renovation. Any alteration or any installation of new equipment shall meet, as nearly as practicable, the requirements for new construction. [**1124:**7.1.1.4]

65.11.1.1.4.1 Only the altered, renovated, or modernized portion of an existing building, system, or individual component shall be required to meet the provisions of this *Code* that are applicable to new construction. [**1124:**7.1.1.4.1]

65.11.1.1.4.2 If the alteration, renovation, or modernization adversely impacts required life safety features, additional upgrading shall be required. [**1124:**7.1.1.4.2]

65.11.1.1.4.3 Except where another provision of this *Code* exempts a previously approved feature from a requirement, the resulting feature shall be not less than that required for existing buildings. [**1124:**7.1.1.4.3]

65.11.1.2 Facility Classification. The requirements of this section shall apply to the following:

(1) Permanent buildings and structures, including the following:
  (a) Stores
  (b) CFRS facilities
(2) Temporary facilities, including the following:
  (a) CFRS stands
  (b) Tents
  (c) Canopies
  (d) Membrane structures [**1124:**7.1.2]

65.11.2 Special Limits for Retail Sales of Consumer Fireworks.

65.11.2.1 Retail sales of consumer fireworks, including their related storage and display for sale of such fireworks, shall be in accordance with this *Code.* [**1124:**7.2.1]

65.11.2.2* Retail sales of consumer fireworks shall be limited to mercantile occupancies defined in Section 20.12 and NFPA *101.* [**1124:**7.2.2]

65.11.2.3 Any building or structure used for the retail sales of consumer fireworks, including their related storage, shall comply with Section 20.12 and NFPA *101* for mercantile occupancies, except as provided in this *Code.* [**1124:**7.2.3]

65.11.2.4 Retail sales of display fireworks and pyrotechnic articles, including the related storage and display for sale of such fireworks and articles, shall be prohibited at a CFRS facility or store. [**1124:**7.2.4]

65.11.2.5 Retail sales of certain explosive devices prohibited by the *Child Safety Act of 1966*, including the related storage and display for sale of such devices, shall be prohibited at a CFRS facility or store. [**1124:**7.2.5]

65.11.2.6 The retail sales of pest control devices, including their related storage and display for sale, shall be prohibited at a CFRS facility or store. [**1124:**7.2.6]

65.11.2.7 The retail sales of fireworks that do not comply with the regulations of the U.S. Consumer Product Safety Commission as set forth in 16 CFR 1500 and 1507 and the regulations of the U.S. Department of Transportation as set forth in 49 CFR 100 to 178, including their related storage and display for sale, shall be prohibited. [**1124:**7.2.7]

65.11.3 General Requirements for All Retail Sales.

65.11.3.1 Exempt Amounts.

65.11.3.1.1 The requirements of this section shall not apply to CFRS facilities or stores where the consumer fireworks are in packages and where the total quantity of consumer fireworks on hand does not exceed 125 lb (net) [56.8 kg] of pyrotechnic composition or, in a building protected throughout with an approved automatic sprinkler system installed in accordance with Section 13.3, 250 lb (net) [113.6 kg] of pyrotechnic composition. [**1124:**7.3.1.1]

65.11.3.1.2 Where the actual weight of the pyrotechnic composition of consumer fireworks is not known, 25 percent of the gross weight of the consumer fireworks, including packaging, shall be permitted to be used to determine the weight of the pyrotechnic composition. [**1124:**7.3.1.2]

65.11.3.2* Permits. Where required by state or local laws, ordinances, or regulations, a permit for the following shall be obtained:

(1) Construction, erection, or operation of the following:
  (a) Permanent building or structure
  (b) Temporary structure such as a stand, tent, or canopy used for the purpose of the retail display or sale of consumer fireworks to the public
(2) Storage of consumer fireworks in connection with the retail display or sale of consumer fireworks to the public [1124:7.3.2]

65.11.3.3 Plans. Plans for facilities other than stands and tents shall include the following:

(1) Minimum distances from the following:
  (a) Public ways
  (b) Buildings
  (c) Other CFRS facilities
  (d) Motor vehicle fuel–dispensing station dispensers
  (e) Retail propane-dispensing station dispensers
  (f) Flammable and combustible liquid aboveground tank storage
  (g) Flammable gas and flammable liquefied gas bulk aboveground storage and dispensing areas within 300 ft (91.5 m) of the facility used for the retail sales of consumer fireworks
(2) Vehicle access and parking areas
(3) Location and type of portable fire extinguishers
(4) Floor plan and layout of storage and displays to indicate compliance with this chapter and applicable state or local laws, ordinances, or regulations
(5) Means of egress
(6) Construction details [1124:7.3.3]

65.11.3.4* Fire Department Access. Any portion of an exterior wall of a building, sidewall of a tent, or other defined perimeter of a CFRS facility or store shall be accessible within 150 ft (45.7 m) of a public way or an approved fire apparatus access. [1124:7.3.4]

65.11.3.5 Construction of Buildings and Structures. Consumer fireworks shall only be permitted to be sold at retail in any of the following buildings or structures, provided that any new building or structure does not exceed one story in height:

(1) Permanent buildings or structures constructed in accordance with the building code enforced by the AHJ
(2) Tents, canopies, or temporary membrane structures complying with NFPA 102, *Standard for Grandstands, Folding and Telescopic Seating, Tents, and Membrane Structures*
(3) Temporary structures constructed in accordance with this chapter
(4) Temporary CFRS stands greater than 800 ft^2 (74 m^2) in area that also meet the requirements for a permanent structure
(5) Vehicles, such as vans, buses, trailers, recreational vehicles, motor homes, travel trailers, trucks, and automobiles, complying with the applicable requirements for CFRS stands [1124:7.3.5]

65.11.3.6 An automatic sprinkler system designed and installed in accordance with NFPA 13 shall be provided throughout permanent CFRS facilities and stores in which CFRS are conducted in the following buildings:

(1) New buildings greater than 6000 ft^2 (557.2 m^2) in area
(2) Existing buildings greater than 7500 ft^2 (694 m^2) in area [1124:7.3.6]

65.11.3.6.1 Door and window openings in the fire barrier wall shall be protected by self-closing fire doors or fixed fire windows having a fire protection rating of not less than 1 hour and shall be installed in accordance with NFPA 80, *Standard for Fire Doors and Fire Windows.* [1124:7.3.6.1]

65.11.3.6.2 Any other openings or penetrations in the fire barrier wall shall be protected in accordance with NFPA *101.* [1124:7.3.6.2]

65.11.3.6.3 Every CFRS facility and store shall have no fewer than two portable fire extinguishers with a minimum rating of 2A, at least one of which shall be of the pressurized water type. [1124:7.3.6.3]

65.11.3.7 Storage Rooms. Storage rooms containing consumer fireworks in a new permanent CFRS facility or store shall be protected with an automatic sprinkler system installed in accordance with NFPA 13 or separated from the retail sales area by a fire barrier having a fire resistance rating of not less than 1 hour. [1124:7.3.7]

65.11.3.8 Portable Fire Extinguishers.

65.11.3.8.1 Specification. Portable fire extinguishers shall be provided as required for extra (high) hazard occupancy in accordance with NFPA 10. [1124:7.3.8.1]

65.11.3.8.2 Extinguisher Type. Where more than one portable fire extinguisher is required, at least one fire extinguisher shall be of the multipurpose dry chemical type if the facility is provided with electrical power. [1124:7.3.8.2]

65.11.3.8.3 Location. Portable fire extinguishers for permanent consumer fireworks retail sales facilities and stores shall be located so that the maximum distance of travel required to reach an extinguisher from any point does not exceed 75 ft (23 m), as specified in NFPA 10. [1124:7.3.8.3]

65.11.3.9 Fire Alarms. A fire alarm system shall be provided as required by NFPA *101.* [1124:7.3.9]

65.11.3.10 Smoke Control.

65.11.3.10.1 Smoke and heat vents designed and installed in accordance with NFPA 204, *Standard for Smoke and Heat Venting,* shall be provided in the CFRS area of new permanent CFRS facilities or stores where the ceiling height is less than 10 ft (3.05 m) and the travel distance to reach an exit is greater than 25 ft (7.6 m). [1124:7.3.10.1]

65.11.3.10.2 The smoke and heat vents required by 65.11.3.10.1 shall be automatically activated by a smoke detection system installed throughout the CFRS area in accordance with *NFPA 72.* [1124:7.3.10.2]

65.11.3.11 No Smoking Signs.

65.11.3.11.1 Smoking shall not be permitted inside or within 50 ft (15.5 m) of the CFRS area. [1124:7.3.11.1]

65.11.3.11.2 At least one sign that reads as follows, in letters at least 2 in. (51 mm) high on a contrasting background, shall be conspicuously posted at each entrance or within 10 ft (3.05 m) of every aisle directly serving the CFRS area in a store: [1124:7.3.11.2]

FIREWORKS — NO SMOKING

65.11.3.12 Distance from Bulk Dispensing and Bulk Storage.

65.11.3.12.1 CFRS facilities and stores shall not be located within 50 ft (15.2 m) of the following:

(1) Retail propane-dispensing station dispensers
(2) Aboveground storage tanks for flammable or combustible liquid, flammable gas, or flammable liquefied gas
(3) Compressed natural gas–dispensing station dispensers [**1124:**7.3.12.1]

65.11.3.12.2 New CFRS facilities and stores, existing CFRS stands and tents, and temporary CFRS facilities shall not be located within 50 ft (15.2 m) of motor vehicle fuel–dispensing station dispensers. [**1124:**7.3.12.2]

65.11.3.12.3 Existing CFRS facilities, other than CFRS stands, tents, and temporary facilities, and existing stores shall not be located within 25 ft (7.6 m) of motor vehicle fuel–dispensing station dispensers. [**1124:**7.3.12.3]

65.11.3.12.4 Fuel tanks on vehicles or other motorized equipment shall not be considered bulk storage. [**1124:**7.3.12.4]

65.11.3.12.5 Fuel storage for generators shall be in accordance with 65.11.4.9.2. [**1124:**7.3.12.5]

65.11.3.12.6 CFRS areas and storage areas shall not be located within 300 ft (91.2 m) of any aboveground bulk storage or bulk dispensing area for the following:

(1) Flammable or combustible liquid
(2) Flammable gas
(3) Flammable liquefied gas [**1124:**7.3.12.6]

65.11.3.13* Fire Safety and Evacuation Plan. For a CFRS facility or store, an approved fire safety and evacuation plan shall be prepared in writing and maintained current. [**1124:**7.3.13]

65.11.3.14 Means of Egress.

65.11.3.14.1 Number of Exits.

65.11.3.14.1.1 The minimum number of exits provided from the retail sales area shall be not less than three or as determined in accordance with Chapter 14 and NFPA *101*, whichever number is greater. [**1124:**7.3.14.1.1]

65.11.3.14.1.2 Required means of egress from the retail sales area shall not be allowed to pass through storage rooms. [**1124:**7.3.14.1.2]

65.11.3.14.2 Egress Travel Distance. Exits provided for the retail sales area of tents, membrane structures, canopies, and permanent CFRS facilities, including Class C stores, shall be located so that the maximum egress travel distance, measured from the most remote point to an exit along the natural and unobstructed path of egress travel, does not exceed 75 ft (22.9 m). [**1124:**7.3.14.2]

65.11.3.14.3 Aisles. Aisles serving as a portion of the exit access in CFRS areas shall comply with this paragraph. [**1124:**7.3.14.3]

65.11.3.14.3.1 Aisle Width.

65.11.3.14.3.1.1 Aisles shall have a minimum clear width of 48 in. (1.2 m). [**1124:**7.3.14.3.1.1]

65.11.3.14.3.1.2 The required width of aisles shall be maintained unobstructed at all times the facility is occupied by the public. [**1124:**7.3.14.3.1.2]

65.11.3.14.3.2* Aisle Arrangements.

65.11.3.14.3.2.1 Not less than one aisle shall be provided and arranged so that travel along the aisle leads directly to an exit. [**1124:**7.3.14.3.2.1]

65.11.3.14.3.2.2 Other required exits shall be located at, or within 10 ft (3.05 m) of, the end of an aisle or a cross-aisle. [**1124:**7.3.14.3.2.2]

65.11.3.14.3.2.3 Aisles shall terminate at an exit, another aisle, or a cross-aisle. [**1124:**7.3.14.3.2.3]

65.11.3.14.3.2.4 Dead-end aisles shall be prohibited. [**1124:**7.3.14.3.2.4]

65.11.3.14.3.2.5 Where more than one aisle is provided, not less than one cross-aisle shall have an unobstructed connection with every aisle, other than cross-aisles. [**1124:**7.3.14.3.2.5]

65.11.3.14.3.2.6 Cross-aisle connections shall be provided for each aisle at intervals not greater than 50 ft (15.2 m) as measured along the aisle. [**1124:**7.3.14.3.2.6]

65.11.3.14.3.2.7 Where cross-aisles are required, not less than one cross-aisle shall have at least one end terminate at, or within 10 ft (3.05 m) of, an exit. [**1124:**7.3.14.3.2.7]

65.11.3.14.4 Doors and Doorways. Doors and doorways used in the means of egress shall comply with this paragraph. [**1124:**7.3.14.4]

65.11.3.14.4.1 Egress doors shall be not less than 36 in. (910 mm) in width [providing a minimum of 32 in. (813 mm) clear width]. [**1124:**7.3.14.4.1]

65.11.3.14.4.2 Every egress door that has a latching device shall be provided with panic hardware complying with Chapter 14 and NFPA *101*. [**1124:**7.3.14.4.2]

65.11.3.14.4.3 Means of egress doors shall be of the side-hinge swinging type and shall be arranged to swing in the direction of egress travel. [**1124:**7.3.14.4.3]

65.11.3.14.5 Exit Signs.

65.11.3.14.5.1 Exits shall be marked by an approved exit sign in accordance with Section 14.14 and NFPA *101*. [**1124:**7.3.14.5.1]

65.11.3.14.5.2 Exit signs shall be required to be self-luminous or internally or externally illuminated. [**1124:**7.3.14.5.2]

65.11.3.14.6 Emergency Lighting.

65.11.3.14.6.1 The means of egress, including the exit discharge, shall be illuminated whenever the facility is occupied in accordance with Section 14.13 and NFPA *101*. [**1124:**7.3.14.6.1]

65.11.3.14.6.2 Emergency lighting shall be provided for CFRS facilities and stores and shall comply with Section 14.13 and NFPA *101*. [**1124:**7.3.14.6.2]

65.11.3.15* Retail Sales Displays.

65.11.3.15.1 General. The requirements of this section shall apply only to CFRS areas, unless otherwise specifically indicated. [**1124:**7.3.15.1]

65.11.3.15.2* Height of Sales Displays. To provide for visual access of the retail sales area by the employees and customers, partitions, counters, shelving, cases, and similar space dividers shall not exceed 6 ft (1.8 m) in height above the floor surface inside the perimeter of the retail sales area. [**1124:**7.3.15.2]

65.11.3.15.2.1 Merchandise on display or located on shelves or counters or other fixtures shall not be displayed to a height greater than 6 ft (1.8 m) above the floor surface within the CFRS area. [1124:7.3.15.2.1]

65.11.3.15.2.2 Where located along the perimeter of the consumer fireworks retail sales area, the maximum height of sales displays shall be limited to 12 ft (3.66 m). [1124:7.3.15.2.2]

65.11.3.15.3* Flame Breaks.

65.11.3.15.3.1 Where continuous displays of consumer fireworks are located on shelving, cases, counters, and similar display fixtures, a flame break shall be provided so that the maximum distance between flame breaks does not exceed 16 ft (4.9 m) where measured along the length of the display. [1124:7.3.15.3.1]

65.11.3.15.3.2 The flame break shall extend as follows:

(1) From the display surface to not less than 6 in. (150 mm) above the full height of the displayed merchandise or to the underside of the display surface directly above
(2) For the full depth of the displayed merchandise [1124:7.3.15.3.2]

65.11.3.15.3.3* Where packaged fireworks merchandise is displayed on the same level as individual unpackaged fireworks devices, the flame break required in 65.11.3.15.3.1 shall not be required where both of the following criteria are met:

(1) The length of the display level containing individual unpackaged fireworks devices is interrupted by packaged fireworks merchandise, or open space, or any combination thereof, having a continuous length of not less than 8 ft (2.4 m).
(2) The distance between flame breaks does not exceed 32 ft (9.8 m). [1124:7.3.15.3.3]

65.11.3.15.3.4 Where a merchandise display level contains packaged fireworks merchandise, such merchandise shall be permitted to be displayed in a continuous length on the same level, where the display does not exceed 32 ft (9.8 m) without the flame break required in 65.11.3.15.3.1. [1124:7.3.15.3.4]

65.11.3.15.3.5 An aisle having a minimum width of 48 in. (1.2 m) shall be permitted to substitute for the flame break required in 65.11.3.15.3.1. [1124:7.3.15.3.5]

65.11.3.15.3.6 Where displays of merchandise face aisles that run along both long sides of the display fixtures or display surface, a flame break shall be installed lengthwise between the abutting display fixtures or along the approximate longitudinal centerline of the display surface so as to separate the merchandise facing one of the aisles from the merchandise that abuts it facing the other aisle. [1124:7.3.15.3.6]

65.11.3.15.3.7 Freestanding display racks, pallets, tables, or bins containing packaged fireworks merchandise shall be permitted without flame breaks, provided the dimensions of the area occupied by the fireworks merchandise do not exceed 4 ft (1.2 m) in width, 8 ft (2.4 m) in length, and 6 ft (1.8 m) in height, and the displayed fireworks merchandise is separated from other displays of merchandise by aisles having a minimum clear width of 4 ft (1.2 m). [1124:7.3.15.3.7]

65.11.3.15.3.8 Where both of the facing vertical surfaces of the abutting display fixtures are constructed of perforated hardboard panels not less than ¼ in. (6 mm) thick that are separated from each other by an open space not less than 1½ in. (38 mm) wide, a flame break specified in 65.11.3.15.3.6 shall not be required.

65.11.3.15.4 Shelving.

65.11.3.15.4.1 Shelving or other surfaces used to support fireworks display merchandise shall be permitted to have not more than 10 percent of the area of the shelf contain holes or other openings. [1124:7.3.15.4.1]

65.11.3.15.4.2 The 10 percent limitation on the area of holes or other openings in the shelf used to support fireworks display merchandise shall not be applicable under the following conditions:

(1) Where both of the facing vertical surfaces of the abutting display fixtures are constructed of perforated hardboard panels not less than ¼ in. (6 mm) thick and separated from each other by an open space not less than 1½ in. (38 mm) wide
(2) Where such merchandise is suspended from or fastened to the shelf or surface or is displayed as packaged merchandise on the surface or in bins [1124:7.3.15.4.2]

65.11.3.15.4.3 Flame breaks and solid display surfaces shall not be required for packaged fireworks merchandise displayed in bins or display racks or on pallets or tables located at the end of a row of display fixtures where the following conditions are met:

(1) Such end displays are separated from the ends of the display fixtures by an open space not less than 3 in. (76 mm) wide.
(2) The fireworks merchandise occupies an area having dimensions not greater than the width of the end of the row of display fixtures and a depth not greater than 36 in. (910 mm).
(3) The minimum required widths of the adjacent aisles are maintained, but in no case is the aisle width less than 48 in. (1.2 m). [1124:7.3.15.4.3]

65.11.3.15.5 Covered Fuses.

65.11.3.15.5.1 Only consumer fireworks meeting the criteria for covered fuses as defined in 3.3.72 or as described in 65.11.3.15.5.2 shall be permitted where the retail sales of consumer fireworks are conducted. [1124:7.3.15.5.1]

65.11.3.15.5.2 A consumer fireworks device shall be considered as having a covered fuse if the fireworks device is contained within a packaged arrangement, container, or wrapper that is arranged and configured such that the fuse of the fireworks device cannot be touched directly by a person handling the fireworks without the person having to puncture or tear the packaging or wrapper, unseal or break open a package or container, or otherwise damage or destroy the packaging material, wrapping, or container within which the fireworks are contained. [1124:7.3.15.5.2]

65.11.3.15.6* Aerial Devices. Aerial devices shall be packaged and displayed for sale in a manner that will limit travel distance of ejected pyrotechnic components if ignition of the fireworks occurs. [1124:7.3.15.6]

65.11.3.15.7* Horizontal Barriers. Combustible materials and merchandise shall not be stored directly above the consumer fireworks in retail sales displays unless a horizontal barrier is installed directly above the consumer fireworks as prescribed in 7.4.2.2.5 of NFPA 430. [1124:7.3.15.7]

65.11.3.16 Electrical Equipment. All electrical wiring shall be in accordance with NFPA 70. [1124:7.3.16]

65.11.3.17 Heating Equipment.

65.11.3.17.1 Heating units shall be listed and shall be used in accordance with their listing. [**1124:**7.3.17.1]

65.11.3.17.2 Temporary heating sources shall have tip-over and temperature-overheat protection. [**1124:**7.3.17.2]

65.11.3.17.3 Open-flame and exposed-element heating devices shall be prohibited. [**1124:**7.3.17.3]

65.11.3.18 Portable Generators.

65.11.3.18.1 Class II and Class III combustible liquid generator fuel shall be limited to not more than 5 gal (18.9 L). [**1124:**7.3.18.1]

65.11.3.18.2 Portable generators shall be permitted to use Class I flammable liquids as fuel, provided the quantity of such fuel is limited to 2 gal (7.6 L). [**1124:**7.3.18.2]

65.11.3.19 Operations.

65.11.3.19.1 General. Means of egress, including but not limited to aisles, doors, and exit discharge, shall be clear at all times when the facility or the building is occupied. [**1124:**7.3.19.1]

65.11.3.19.2 Distances from Entrances and Exits.

65.11.3.19.2.1 No consumer fireworks shall be displayed for sale or stored within 5 ft (1.5 m) of any public entrance in an enclosed building or structure. [**1124:**7.3.19.2.1]

65.11.3.19.2.2 No consumer fireworks shall be displayed for sale or stored within 2 ft (0.6 m) of any exit or private entrance in an enclosed building or structure. [**1124:**7.3.19.2.2]

65.11.3.19.3 Security.

65.11.3.19.3.1 CFRS facilities and stores shall be secured when unoccupied and not open for business, unless fireworks are not kept in the facility during such times. [**1124:**7.3.19.3.1]

65.11.3.19.3.2 The fireworks displayed or stored in a CFRS facility or store shall be allowed to be removed and transferred to a temporary storage structure or location. [**1124:**7.3.19.3.2]

65.11.3.19.4 Fireworks shall not be ignited, discharged, or otherwise used within 300 ft (91.5 m) of a CFRS facility or store. [**1124:**7.3.19.4]

65.11.3.20 Display and Handling. Not less than 50 percent of the available floor area within the retail sales area shall be open space that is unoccupied by retail displays and used only for aisles and cross-aisles. [**1124:**7.3.20]

65.11.3.21* Housekeeping.

65.11.3.21.1 CFRS areas and storage rooms shall be kept free of accumulations of debris and rubbish. [**1124:**7.3.21.1]

65.11.3.21.2 Any loose pyrotechnic composition shall be removed immediately. [**1124:**7.3.21.2]

65.11.3.21.3 Vacuum cleaners or other mechanical cleaning devices shall not be used. [**1124:**7.3.21.3]

65.11.3.21.4 Brooms, brushes, and dustpans used to sweep up any loose powder or dust shall be made of nonsparking materials. [**1124:**7.3.21.4]

65.11.3.21.5 Consumer fireworks devices that are damaged shall be removed and not offered for sale. [**1124:**7.3.21.5]

65.11.3.21.6 Damaged consumer fireworks shall be permitted to be returned to the dealer or shall be disposed of according to the manufacturer's instructions. [**1124:**7.3.21.6]

65.11.3.22* Training. All personnel handling consumer fireworks shall receive safety training related to the performance of their duties. [**1124:**7.3.22]

65.11.3.23 Under the Influence. Any person selling consumer fireworks shall not knowingly sell consumer fireworks to any person who is obviously under the influence of alcohol or drugs. [**1124:**7.3.23]

65.11.3.24 Records.

65.11.3.24.1 Records shall be maintained on available inventory on the premise. [**1124:**7.3.24.1]

65.11.3.24.2 Records shall be made available to the AHJ upon request. [**1124:**7.3.24.2]

65.11.4 Consumer Fireworks Retail Sales (CFRS) Facility Requirements.

65.11.4.1 Plan. Where required, plans for CFRS facilities shall be submitted to the AHJ with the permit application. [**1124:**7.4.1]

65.11.4.2 Site Plan. The site plan for tents shall show the location of the tent on the site and indicate the minimum separation distances required by 65.11.4.7. [**1124:**7.4.2]

65.11.4.3 Construction Materials. The following construction materials requirements shall apply to new permanent CFRS facilities in jurisdictions that have not adopted a local building code:

(1) Buildings having an area up to and including 8000 ft^2 (743 m^2) shall be permitted to be constructed of any approved construction materials.
(2) Buildings having an area greater than 8000 ft^2 (743 m^2) shall be constructed in accordance with one of the following:
    (a) Buildings shall be constructed of noncombustible or limited-combustible materials.
    (b) Buildings with exterior walls having a fire resistance rating of not less than 2 hours shall be permitted to have the roof decking and its supporting structure and interior partitions constructed of combustible materials.
(3) Roof coverings for any building shall have a minimum rating of Class C as determined in accordance with NFPA 256. [**1124:**7.4.3]

65.11.4.4 Multiple-Tenant Buildings.

65.11.4.4.1 Where new CFRS facilities are located in a building containing other tenants, the CFRS facility shall be separated from the other tenants by fire barriers having no openings and a fire resistance rating of not less than 2 hours. [**1124:**7.4.4.1]

65.11.4.4.2 Where the new CFRS facility is protected per Section 13.3, the fire resistance rating of the fire barrier required by 65.11.4.4.1 shall be permitted to be not less than 1 hour. [**1124:**7.4.4.2]

65.11.4.4.3 Any penetrations of the fire barrier shall be protected in accordance with NFPA *101*. [**1124:**7.4.4.3]

65.11.4.5 Fire Protection.

65.11.4.5.1 Automatic Sprinkler System Alarm. Any waterflow alarm device shall be arranged to activate audible and visual alarms throughout the CFRS facility in accordance with Section 13.7 and *NFPA 72*. [**1124:**7.4.5.1]

65.11.4.5.2 Portable Fire Extinguishers. Portable fire extinguishers for temporary CFRS facilities shall be installed and located so that the maximum distance of travel required to reach an extinguisher from any point does not exceed 35 ft (10.6 m). [1124:7.4.5.2]

65.11.4.5.3 Public Notification. In permanent CFRS facilities greater than 3000 ft^2 (278.6 m^2) in area, a public address system or a means for manually activating audible and visible alarm indicating devices located throughout the facility in accordance with Section 13.7 and *NFPA 72* shall be provided at a constantly attended location when the CFRS facility is occupied. [1124:7.4.5.3]

65.11.4.6 Site Requirements.

65.11.4.6.1 Clearance to Combustibles. The area located within 30 ft (9 m) of a CFRS facility shall be kept free of accumulated dry grass, dry brush, and combustible debris. [1124:7.4.6.1]

65.11.4.6.2 Parking. No motor vehicle or trailer used for the storage of consumer fireworks shall be parked within 10 ft (3 m) of a CFRS facility, except when delivering, loading, or unloading fireworks or other merchandise and materials used, stored, or displayed for sale in the facility. [1124:7.4.6.2]

65.11.4.6.3 Fireworks Discharge. At least one sign that reads as follows, in letters at least 4 in. (102 mm) high on a contrasting background, shall be conspicuously posted on the exterior of each side of the CFRS facility: [1124:7.4.6.3]

NO FIREWORKS DISCHARGE
WITHIN 300 FEET

65.11.4.7 Separation Distances.

65.11.4.7.1 Permanent Facilities.

65.11.4.7.1.1 New Facilities. New permanent consumer fireworks retail sales facilities shall be separated from adjacent permanent buildings and structures in accordance with Table 65.11.4.7.1.1. [1124:7.4.7.1.1]

65.11.4.7.1.2 Existing Facilities. Existing permanent CFRS facilities shall be separated from adjacent permanent buildings and structures by not less than 10 ft (3.05 m) or shall be separated by a wall with a 1-hour fire resistance rating. [1124:7.4.7.1.2]

65.11.4.7.2 Temporary Facilities. Temporary CFRS facilities shall be located as specified in Table 65.11.4.7.2. [1124:7.4.7.2]

Table 65.11.4.7.1.1 Separation Distances Between New Permanent Buildings and Structures

Separation Distances		Exterior Wall Fire Resistance Rating (hr)	Exterior Wall Opening Protection Rating (hr)
ft	m		
< 10	< 3.05	2	1½
≥ 10–< 60	≥ 3.05–< 18.3	1	¾
≥ 60	≥ 18.3	0	0

[1124:Table 7.4.7.1.1]

65.11.4.8 Means of Egress.

65.11.4.8.1 General.

65.11.4.8.1.1 Means of egress in CFRS facilities shall comply with the applicable requirements of Chapter 14 and NFPA *101*, as modified by 65.11.3.14 and 65.11.4.8. [1124:7.4.8.1.1]

65.11.4.8.1.2* Means of egress in tents and membrane structures used for retail sales of consumer fireworks shall also comply with NFPA 102, as modified by 65.11.3.14 and 65.11.4.8. [1124:7.4.8.1.2]

65.11.4.8.2 The evacuation plan shall be posted in a conspicuous location that is accessible to the public as well as to persons employed or otherwise working in the CFRS facility. [1124:7.4.8.2]

65.11.4.8.3 Exit signs shall not be required to be illuminated in tents that are not open for business after dusk. [1124:7.4.8.3]

65.11.4.8.4 Emergency lighting shall not be required in tents that are not open for business after dusk. [1124:7.4.8.4]

65.11.4.8.5 Exit openings from tents shall have a clear opening width of not less than 44 in. (1100 mm). [1124:7.4.8.5]

65.11.4.9 Source of Ignition.

65.11.4.9.1 Temporary Electrical Equipment. Battery-powered equipment, electrical equipment, and electrical cords that are used in conjunction with a CFRS facility area shall be listed and shall be used in accordance with their listing. [1124:7.4.9.1]

Table 65.11.4.7.2 Temporary CFRS Facilities — Minimum Separation Distances

	Buildings		Combustibles[a]		Tents[b]		Vehicle Parking		Stands[c]		Storage of Consumer Fireworks	
	ft	m	ft	m	ft	m	ft	m	ft	m	ft	m
Tents[b]	20	6.1	20	6.1	20	6.1	10	3.05	20	6.1	20	6.1
Stands[c]	20	6.1	10	3.05	20	6.1	10	3.05	5[d]	1.5[d]	20	6.1

[a] The required clearances to combustibles shall also comply with 65.11.4.6.1.
[b] *Tents* refers to temporary retail sales of consumer fireworks in tents, canopies, and membrane structures.
[c] *Stands* refers to temporary CFRS stands.
[d] Where stands are separated from each other by less than 20 ft (6.1 m), the aggregate area of such stands shall not exceed 800 ft^2 (74 m^2). [1124:Table 7.4.7.2]

65.11.4.9.1.1 Temporary wiring installed in a temporary structure, including tents and canopies, shall comply with Article 305 of NFPA 70. [**1124:**7.4.9.1.1]

65.11.4.9.1.2 Where temporary electrical conductors are placed on top of an outdoor surface to connect the permanent power source to the temporary CFRS facility's temporary electrical system, the conductors shall be provided with physical protection against damage caused by pedestrian or vehicular traffic. [**1124:**7.4.9.1.2]

65.11.4.9.2 Portable Generators.

65.11.4.9.2.1 Portable generators supplying power to CFRS facilities shall use only Class II or Class III combustible liquid fuels. [**1124:**7.4.9.2.1]

65.11.4.9.2.2 Portable generators shall be located not less than 20 ft (6.1 m) from the CFRS facility. [**1124:**7.4.9.2.2]

65.11.4.9.2.3 Generator fuels shall be stored not less than 20 ft (6.1 m) from the CFRS facility. [**1124:**7.4.9.2.3]

65.11.4.9.2.4* Where the generator fuel storage is located not less than 50 ft (15.2 m) from the CFRS facility, the quantity of such fuel shall not be limited by 65.11.3.18. [**1124:**7.4.9.2.4]

65.11.4.9.3 Cooking Equipment.

65.11.4.9.3.1 Cooking equipment of any type shall not be permitted within 20 ft (6.1 m) of tents, canopies, or membrane structures used for the storage or sale of consumer fireworks. [**1124:**7.4.9.3.1]

65.11.4.9.3.2 Open flame cooking equipment of any type shall not be allowed within 50 ft (15.2 m) of tents, canopies, or membrane structures used for the storage or sale of consumer fireworks. [**1124:**7.4.9.3.2]

65.11.4.10 Quantity Limitations. The floor area occupied by the retail displays of consumer fireworks in permanent CFRS facilities shall not exceed 40 percent of the available floor area within the retail sales area. [**1124:**7.4.10]

65.11.4.11 Flame Breaks. In CFRS facilities the longitudinal flame break required in 65.11.3.15.3.6 shall not be required where the display fixture or surface is adjacent to an aisle that is not used for public egress. [**1124:**7.4.11]

65.11.5 Stores.

65.11.5.1 General.

65.11.5.1.1* For the purpose of this chapter, stores in which retail sales of consumer fireworks are conducted shall not be considered CFRS facilities as defined in 3.3.63 where both of the following conditions exist:

(1) The area of the retail sales floor occupied by the retail displays of consumer fireworks does not exceed 25 percent of the area of the retail sales floor in the building or 600 ft^2 (55.5 m^2), whichever is less.
(2) The consumer fireworks are displayed and sold in a manner approved by the AHJ and comply with the applicable provisions of this code, federal and state law, and local ordinances. [**1124:**7.5.1.1]

65.11.5.1.2 Consumer fireworks displayed for sale in stores shall comply with the following:

(1) Such fireworks shall be under the visual supervision of a store employee or other responsible party while the store is open to the public.
(2) Such fireworks shall be packaged fireworks merchandise.
(3)*Such fireworks shall be packaged and displayed for sale in a manner that will limit travel distance of ejected pyrotechnical components if ignition of the fireworks occurs.
(4) Where consumer fireworks meeting the descriptions of C.3.1.2 or C.3.1.3 of NFPA 1124 for aerial devices and audible ground devices, respectively, are sold, such devices shall be displayed for sale in an area of the store that is physically separated from the rest of the store in a manner that restricts entry by the public, and the area of the store shall be provided with not less than two means of egress, so located that there is no common path of travel and the distance to reach an egress point from the area does not exceed 35 ft (10.7 m). [**1124:**7.5.1.2]

65.11.5.2 Egress. Means of egress in stores shall comply with Chapter 14 and NFPA *101*, unless otherwise specified in 65.11.3.14. [**1124:**7.5.2]

65.11.5.3 Storage Rooms. Storage rooms containing consumer fireworks in a new permanent store shall be protected with an automatic sprinkler system installed in accordance with Section 13.3 and NFPA 13 or separated from the retail sales area by a fire barrier having a fire resistance rating of not less than 1 hour. [**1124:**7.5.3]

65.11.5.3.1 Door and window openings in the fire barrier wall shall be protected by self-closing fire doors or fixed fire windows having a fire protection rating of not less than 1 hour and shall be installed in accordance with NFPA 80. [**1124:**7.5.3.1]

65.11.5.3.2 Any other openings or penetrations in the fire barrier wall shall be protected in accordance with NFPA *101*. [**1124:**7.5.3.2]

65.11.5.4 Alarm Notification. In Class B stores, a public address system or a means for manually activating audible and visible alarm indicating devices located throughout the facility in accordance with Section 13.7 and *NFPA 72* shall be provided at a constantly attended location when the store is occupied. [**1124:**7.5.4]

65.11.5.5 Flame breaks shall be allowed to be omitted in stores protected throughout with an automatic sprinkler system installed in accordance with Section 13.3 and NFPA 13. [**1124:**7.5.5]

65.11.6 Stands.

65.11.6.1 Site Plan. The site plan for stands shall show the location of the stand on the site and indicate the minimum separation distances required by 65.11.4.7. [**1124:**7.6.1]

65.11.6.2 Temporary Stands.

65.11.6.2.1 Portable Fire Extinguisher. Temporary CFRS stands of less than 200 ft^2 (18.6 m^2) shall be required to have only one portable fire extinguisher. [**1124:**7.6.2.1]

65.11.6.2.2 Fire Safety and Evacuation Plan. An approved fire safety and evacuation plan shall not be required for temporary CFRS stands. [**1124:**7.6.2.21]

65.11.6.2.3 Means of Egress.

65.11.6.2.3.1 Retail sales areas within temporary CFRS stands shall have a minimum of two exits. [**1124:**7.6.2.3.1]

65.11.6.2.3.2 Exits provided for temporary fireworks retail sales stands shall be located such that the maximum egress travel distance as measured from the most remote point to an

exit along the natural and unobstructed path of egress travel does not exceed 35 ft (10.6 m). [1124:7.6.2.3.2]

65.11.6.2.3.3 Customers shall not be permitted inside a temporary CFRS stand unless it complies with the means of egress requirements in 65.11.3.14. [1124:7.6.2.3.3]

65.11.6.2.3.4 Exit signs shall not be required to be illuminated in stands that are not open for business after dusk, or in temporary CFRS stands where the interior is not accessible to the public. [1124:7.6.2.3.4]

65.11.6.2.3.5 Emergency lighting shall not be required in stands that are not open for business after dusk or for temporary CFRS stands where the interior is not accessible to the public. [1124:7.6.2.3.5]

65.11.6.3 Minimum Separation Distances. Temporary CFRS stands shall be separated from adjacent buildings and structures in accordance with Table 65.11.4.7.2. [1124:7.6.3]

65.11.6.4 Stands Not Open to the Public.

65.11.6.4.1 Minimum Clear Width of Aisles. In temporary CFRS stands where the interior is not accessible to the public, the minimum clear width of the aisle shall be permitted to be not less than 28 in. (710 mm). [1124:7.6.4.1]

65.11.6.4.2 Egress Doors.

65.11.6.4.2.1 Egress doors provided for temporary CFRS stands where the interior is not accessible to the public shall be permitted to be not less than 28 in. (710 mm) in width. [1124:7.6.4.2.1]

65.11.6.4.2.2 For temporary CFRS stands where the interior is not accessible to the public, latching devices on doors shall be permitted without panic hardware. [1124:7.6.4.2.2]

65.11.6.4.3 Storage. In temporary CFRS stands where the interior is not accessible to the public, the maximum height of sales displays shall be limited to 8 ft (2.44 m). [1124:7.6.4.3]

65.11.6.4.4 Flame Breaks. Temporary CFRS stands where the interior is not accessible to the public shall not be required to comply with 65.11.3.15.3. [1124:7.6.4.4]

65.11.6.4.5 Covered Fuses. Individual consumer fireworks items displayed for sale in temporary CFRS stands where the interior is not accessible to the public shall not be required to have covered fuses. [1124:7.6.4.5]

65.11.6.4.6 Sales Display. The following shall apply to the sales display of consumer fireworks in temporary CFRS stands that do not allow access to the interior of the stand by the public:

(1) Consumer fireworks shall be displayed in a manner that prevents the fireworks from being handled by persons other than those operating, supervising, or working in the temporary CFRS stand.
(2) The handling requirements of 65.11.6.4.6(1) shall not apply to packaged assortments, boxes, or similarly packaged containers of one or more items, regardless of type. [1124:7.6.4.6]

Chapter 66 Flammable and Combustible Liquids

66.1 General.

66.1.1* The storage, use, and handling of flammable and combustible liquids, including waste liquids, shall comply with this chapter, NFPA 30, *Flammable and Combustible Liquids Code,* and Section 60.1 and Section 60.2 of this *Code.*

66.1.2 Where the provisions of this chapter or NFPA 30 conflict with the provisions of Chapter 60, the provisions of this chapter and NFPA 30 shall apply.

66.1.3 This chapter shall not apply to the following:

(1)*Any liquid that has a melting point equal to or greater than 100°F (37.8°C) or that does not meet the criteria for fluidity given in the definition for *liquid* in Section 1.7 of NFPA 30 *(See 3.3.148.)*
(2) Any liquefied gas or cryogenic liquid as defined in Chapter 3 of NFPA 30
(3)*Any liquid that does not have a flash point, but which is capable of burning under certain conditions; such liquids include certain halogenated hydrocarbons and certain mixtures of flammable or combustible liquids and halogenated hydrocarbons
(4)*Any aerosol product
(5) Any mist, spray, or foam
(6)*Transportation of flammable and combustible liquids as governed by the U.S. Department of Transportation
(7)*Storage, handling, and use of fuel oil tanks and containers connected with oil-burning equipment [30:1.1.2; 30:1.1.3]

66.1.4 Installations made in accordance with the applicable requirements of the following standards shall be deemed to be in compliance with this chapter:

(1) NFPA 30A, *Code for Motor Fuel Dispensing Facilities and Repair Garages*
(2) NFPA 32, *Standard for Drycleaning Plants*
(3) NFPA 33, *Standard for Spray Application Using Flammable or Combustible Materials*
(4) NFPA 34, *Standard for Dipping and Coating Processes Using Flammable or Combustible Liquids*
(5) NFPA 35, *Standard for the Manufacture of Organic Coatings*
(6) NFPA 36, *Standard for Solvent Extraction Plants*
(7) NFPA 37, *Standard for the Installation and Use of Stationary Combustion Engines and Gas Turbines*
(8) NFPA 45, *Standard on Fire Protection for Laboratories Using Chemicals*
(9) Chapter 10 of NFPA 99, *Standard for Health Care Facilities* [30:1.5.4]

66.1.5 Permits. Permits, where required, shall comply with Section 1.12.

66.1.6* Classification of Liquids. Any liquid within the scope of this chapter and subject to the requirements of this chapter shall be known generally as either a flammable liquid or a combustible liquid and shall be defined and classified in accordance with this subsection. [30:1.7.3]

66.1.6.1 Combustible Liquid. Any liquid that has a closed-cup flash point at or above 100°F (37.8°C), as determined by the test procedures and apparatus set forth in 1.7.4 of NFPA 30 *(see 3.3.148.1).* Combustible liquids are classified as Class II or Class III as follows: (1) *Class II Liquid* — any liquid that has a flash point at or above 100°F (37.8°C) and below 140°F (60°C); (2) *Class IIIA* — any liquid that has a flash point at or above 140°F (60°C), but below 200°F (93°C); (3) *Class IIIB* — any liquid that has a flash point at or above 200°F (93°C). [30:1.7.3.1]

66.1.6.2* Flammable Liquid. Any liquid that has a closed-cup flash point below 100°F (37.8°C), as determined by the test

procedures and apparatus set forth in 1.7.4 of NFPA 30 *(see 3.3.148.2)*. Flammable liquids are classified as Class I as follows: *Class I Liquid* — any liquid that has a closed-cup flash point below 100°F (37.8°C) and a Reid vapor pressure not exceeding 40 psia (2068.6 mm Hg) at 100°F (37.8°C), as determined by ASTM D 323, *Standard Method of Test for Vapor Pressure of Petroleum Products (Reid Method)*. Class I liquids are further classified as follows: (1) *Class IA liquids* — those liquids that have flash points below 73°F (22.8°C) and boiling points below 100°F (37.8°C); (2) *Class IB liquids* — those liquids that have flash points below 73°F (22.8°C) and boiling points at or above 100°F (37.8°C); (3) *Class IC liquids* — those liquids that have flash points at or above 73°F (22.8°C), but below 100°F (37.8°C). [**30**:1.7.3.2]

66.2 Tank Storage.

66.2.1 Scope. Chapter 66 shall apply to the following:

(1) The storage of flammable and combustible liquids, as defined in 1.7.3 of NFPA 30 in fixed aboveground and underground tanks *(See 3.3.148.)*
(2) The storage of flammable and combustible liquids in portable tanks and bulk containers whose capacity exceeds 793 gal (3000 L)
(3) The design, installation, testing, operation, and maintenance of such tanks, portable tanks, and bulk containers [**30**:4.1.1]

66.2.2 Design and Construction of Tanks.

66.2.2.1 General Requirements. Tanks shall be permitted to be of any shape, size, or type consistent with recognized engineering standards. Metal tanks shall be welded, riveted and caulked, or bolted, or constructed using a combination of these methods. [**30**:4.2.1]

66.2.2.1.1 Tanks designed and intended for aboveground use shall not be used as underground tanks. [**30**:4.2.1.1]

66.2.2.1.2 Tanks designed and intended for underground use shall not be used as aboveground tanks. [**30**:4.2.1.2]

66.2.2.2 Vaults for Aboveground Tanks.

66.2.2.2.1 Scope. Paragraph 66.2.2.2 shall apply to installation of aboveground tanks in vaults and design and installation of such vaults. [**30**:4.2.7.1]

66.2.2.2.2 General. Aboveground tanks shall be permitted to be installed in vaults that meet the requirements of 66.2.2.2. Except as modified by the provisions of 66.2.2.2, vaults shall meet all other applicable provisions of this *Code*. Vaults shall be constructed and listed in accordance with UL 2245, *Standard for Below-Grade Vaults for Flammable Liquid Storage Tanks*. Vaults shall be permitted to be either above or below grade. [**30**:4.2.7.2]

66.2.2.2.3 Vault Design and Construction. Vaults shall be designed and constructed to meet the following requirements:

(1) The walls and floor of the vault shall be constructed of reinforced concrete at least 6 in. (150 mm) thick.
(2) The top of an abovegrade vault that contains a tank storing Class I flammable liquid or Class II liquid when stored at temperatures above its flash point shall be constructed of noncombustible material and shall be designed to be weaker than the walls of the vault to ensure that the thrust of any explosion occurring inside the vault is directed upward before destructive internal pressure develops within the vault. The top of an at-grade or belowgrade vault that contains a tank storing Class I flammable liquid or Class II liquid when stored at temperatures above their flash points shall be designed to relieve or contain the force of any explosion occurring inside the vault.
(3) The top and floor of the vault and the tank foundation shall be designed to withstand all anticipated loading, including loading from vehicular traffic, where applicable.
(4) The walls and floor of a belowgrade vault shall be designed to withstand anticipated soil and hydrostatic loading. The vault shall be liquidtight.
(5) Adjacent vaults shall be permitted to share a common wall.
(6) The vault enclosure shall have no openings except those necessary for access to, inspection of, and filling, emptying, and venting of the tank.
(7) Where required, the vault shall be designed to be wind and earthquake resistant, in accordance with recognized engineering standards.
(8) The vault shall be provided with connections to permit ventilation to dilute, disperse, and remove any vapors prior to personnel entering the vault.
(9) The vault shall be provided with a means for personnel entry.
(10) The vault shall be provided with an approved means to admit a fire suppression agent. [**30**:4.2.7.3]

66.2.2.2.4 Tank Selection and Arrangement. Tanks shall be listed for aboveground use. Each tank shall be in its own vault and shall be completely enclosed by the vault. Sufficient clearance between the tank and the vault shall be provided to allow for visual inspection and maintenance of the tank and its appurtenances. Backfill shall not be permitted around the tank. [**30**:4.2.7.4]

66.2.2.2.5 Tank Appurtenances.

66.2.2.2.5.1 Vent pipes that are provided for normal tank venting shall terminate outside the vault and at least 12 ft (3.6 m) above ground level and shall meet the requirements of 5.7.1 of NFPA 30. [**30**:4.2.7.5.1]

66.2.2.2.5.2 Emergency vents shall be vaportight and shall be permitted to discharge inside the vault. Long-bolt manhole covers shall not be permitted for this purpose. [**30**:4.2.7.5.2]

66.2.2.2.5.3 An approved means of overfill protection shall be provided for the tanks in the vaults. The use of ball float valves shall be prohibited. [**30**:4.2.7.5.3]

66.2.2.2.5.4 Fill connections for vaults installed inside buildings shall comply with 4.3.2.5.5 of NFPA 30. [**30**:4.2.7.5.4]

66.2.2.2.6 Exhaust Ventilation Systems. Vaults that contain tanks storing Class I liquids shall be ventilated at a rate of not less than 1 cfm/ft^2 of floor area (0.3 m^3/min per m^2), but not less than 150 cfm (4 m^3/min). Such ventilation shall operate continuously or shall be designed to operate upon activation of a vapor and liquid detection system. Failure of the exhaust airflow shall automatically shut down the dispensing system. The exhaust system shall be designed to provide air movement across all parts of the vault floor. Supply and exhaust ducts shall extend to within 3 in. (75 mm), but not more than 12 in. (300 mm), of the floor. The exhaust system shall be installed in accordance with the provisions of NFPA 91, *Standard for Exhaust Systems for Air Conveying of Vapors, Gases, Mists, and Noncombustible Particulate Solids*. [**30**:4.2.7.6]

66.2.2.2.7 Vapor and Liquid Detection Systems.

66.2.2.2.7.1 The vault shall be provided with an approved vapor and liquid detection system and equipped with on-site audible and visual warning devices with battery back-up. [**30**:4.2.7.7.1]

66.2.2.2.7.2 Vapor detection systems shall sound an alarm when the system detects vapors that reach or exceed 25 percent of the lower flammable limit of the liquid stored. Vapor detectors shall be located no higher than 12 in. (300 mm) above the lowest point in the vault. [**30**:4.2.7.7.2]

66.2.2.2.7.3 Liquid detection systems shall sound an alarm upon detection of any liquid, including water. Liquid detectors shall be located in accordance with the manufacturer's instructions. [**30**:4.2.7.7.3]

66.2.2.2.7.4 Activation of either the vapor detection system or the liquid detection system shall cause a signal to be sounded at an approved, constantly attended location within the facility serving the tanks or at an approved location. [**30**:4.2.7.7.4]

66.2.2.2.8 Vault Installation. The vault shall be installed in accordance with the following requirements:

(1) Each vault and its tank shall be anchored to resist uplifting by groundwater or flooding, including when the tank is empty.
(2) Vaults that are not resistant to damage from the impact of a motor vehicle shall be protected by collision barriers.
(3) Dispensing devices shall be permitted to be installed on the tops of vaults.
(4) Means shall be provided to recover liquid from the vault. If a pump is used to meet this requirement, the pump shall not be permanently installed in the vault. Electric-powered portable pumps shall be approved for use in Class I, Division 1 locations, as defined in NFPA 70.
(5) At each entry point, a warning sign indicating the need for procedures for safe entry into confined spaces shall be posted. Each entry point shall be secured against unauthorized entry and vandalism. [**30**:4.2.7.8]

66.2.2.2.9 In lieu of the separation distance requirements given in 4.3.2.1.1 of NFPA 30 separation distances between the vault and any of the following shall be permitted to be reduced to 0 ft (0 m), as measured from the outer perimeter of the vault wall:

(1) Any property line that is or can be built upon
(2) The near and far sides of a public way
(3) The nearest important building on the same property [**30**:4.2.7.9]

66.2.2.2.10 Vaults and their required equipment shall be maintained in accordance with the construction requirements of 66.2.2.2. [**30**:4.2.7.10]

66.2.2.3 Protected Tanks. Protected tanks shall be listed and shall be tested in accordance with UL 2085, *Standard for Protected Aboveground Tanks for Flammable and Combustible Liquids.* Protected tanks shall also meet both of the following requirements:

(1) The construction that provides the required fire-resistive protection shall reduce the heat transferred to the primary tank and shall prevent release of liquid, failure of the primary tank, failure of the supporting structure, and impairment of venting for a period of not less than 2 hours when tested using the fire exposure specified in UL 2085.
(2) The size of the emergency vent shall not be permitted to be reduced, as would otherwise be permitted by 4.2.5.2.6 of NFPA 30. [**30**:4.2.9]

66.2.3 Installation of Tanks and Tank Appurtenances.

66.2.3.1 Foundations for and Anchoring of Tanks.

66.2.3.1.1* Tanks shall rest on the ground or on foundations made of concrete, masonry, piling, or steel. Tank foundations shall be designed to minimize the possibility of uneven settling of the tank and to minimize corrosion in any part of the tank resting on the foundation. [**30**:4.3.1.1]

66.2.3.1.2 Where tanks are supported above their foundations, tank supports shall be installed on firm foundations. Supports for tanks storing Class I, Class II, or Class IIIA liquids shall be of concrete, masonry, or protected steel.

*Exception: Single wood timber supports (not cribbing), laid horizontally, shall be permitted to be used for outside aboveground tanks if not more than 12 in. (0.3 m) high at their lowest point. [**30**:4.3.1.2]*

66.2.3.1.3* Steel support structures or exposed piling for tanks storing Class I, Class II, or Class IIIA liquids shall be protected by materials having a fire resistance rating of not less than 2 hours.

Exception No. 1: Steel saddles do not need to be protected if less than 12 in. (0.3 m) high at their lowest point.

*Exception No. 2: At the discretion of the AHJ, water spray protection in accordance with NFPA 15, NFPA 13, or equivalent shall be permitted to be used. [**30**:4.3.1.3]*

66.2.3.1.4 Where a tank is located in an area subject to flooding, provisions shall be taken to prevent tanks, either full or empty, from floating during a rise in water level up to the established maximum flood stage. [**30**:4.3.1.4]

66.2.3.2* Installation of Aboveground Tanks.

66.2.3.2.1 Location with Respect to Property Lines, Public Ways, and Important Buildings on the Same Property.

66.2.3.2.1.1 Tanks storing Class I, Class II, or Class IIIA stable liquids and operating at pressures not in excess of a gauge pressure of 2.5 psig (17 kPa) shall be located in accordance with Table 66.2.3.2.1.1(a) and Table 66.2.3.2.1.1(b). Where tank spacing is based on a weak roof-to-shell seam design, the user shall present evidence certifying such construction to the AHJ upon request.

*Exception: Vertical tanks with weak roof-to-shell seams (see 4.2.5.2.2 of NFPA 30) that store Class IIIA liquids shall be permitted to be located at one-half the distances specified in Table 66.2.3.2.1.1(a), provided the tanks are not within the same diked area as, or within the drainage path of, a tank storing a Class I or Class II liquid. [**30**:4.3.2.1.1]*

66.2.3.2.1.2 Tanks storing Class I, Class II, or Class IIIA stable liquids and operating at pressures that exceed a gauge pressure of 2.5 psig (gauge pressure of 17 kPa), or are equipped with emergency venting that will permit pressures to exceed a gauge pressure of 2.5 psig (17 kPa), shall be located in accordance with Table 66.2.3.2.1.2 and Table 66.2.3.2.1.1(b). [**30**:4.3.2.1.2]

66.2.3.2.1.3 Tanks storing liquids with boil-over characteristics shall be located in accordance with Table 66.2.3.2.1.3. Liquids with boil-over characteristics shall not be stored in fixed roof tanks larger than 150 ft (45 m) in diameter, unless an approved inerting system is provided on the tank. [**30**:4.3.2.1.3]

66.2.3.2.1.4 Tanks storing unstable liquids shall be located in accordance with Table 66.2.3.2.1.4 and Table 66.2.3.2.1.1(b). [**30**:4.3.2.1.4]

Table 66.2.3.2.1.1(a) Stable Liquids [Operating Pressure: Not over 2.5 psig (gauge pressure of 17 kPa)]

Type of Tank	Protection	Minimum Distance (ft): From Property Line that Is or Can Be Built Upon, Including the Opposite Side of a Public Way[a]	Minimum Distance (ft): From Nearest Side of Any Public Way or from Nearest Important Building on the Same Property[a]
Floating roof	Protection for exposures[b]	½ × diameter of tank	⅙ × diameter of tank
	None	Diameter of tank but need not exceed 175 ft	⅙ × diameter of tank
Vertical with weak roof-to-shell seam	Approved foam or inerting system[c] on tanks not exceeding 150 ft in diameter[d]	½ × diameter of tank	⅙ × diameter of tank
	Protection for exposures[b]	Diameter of tank	⅓ × diameter of tank
	None	2 × diameter of tank but need not exceed 350 ft	⅓ × diameter of tank
Horizontal and vertical tanks with emergency relief venting to limit pressures to 2.5 psig (gauge pressure of 17 kPa)	Approved inerting system[b] on the tank or approved foam system on vertical tanks	½ × Table 66.2.3.2.1.1(b) value	½ × Table 66.2.3.2.1.1(b) value
	Protection for exposures[b]	Table 66.2.3.2.1.1(b) value	Table 66.2.3.2.1.1(b) value
	None	2 × Table 66.2.3.2.1.1(b) value	Table 66.2.3.2.1.1(b) value
Protected aboveground tank	None	½ × Table 66.2.3.2.1.1(b) value	½ × Table 66.2.3.2.1.1(b) value

Note: For SI units, 1 ft = 0.3 m.
[a]The minimum distance shall not be less than 5 ft.
[b]See definition 3.3.192, Protection for Exposures.
[c]See NFPA 69, *Standard on Explosion Prevention Systems.*
[d]For tanks over 150 ft (45 m) in diameter, use "Protection for Exposures" or "None," as applicable.
[**30**:Table 4.3.2.1.1(a)]

Table 66.2.3.2.1.1(b) Reference Table for Use in Tables 66.2.3.2.1.1(a), 66.2.3.2.1.2, and 66.2.3.2.1.4

Tank Capacity (gal)	Minimum Distance (ft): From Property Line that Is or Can Be Built Upon, Including the Opposite Side of a Public Way	Minimum Distance (ft): From Nearest Side of Any Public Way or from Nearest Important Building on the Same Property
275 or less	5	5
276 to 750	10	5
751 to 12,000	15	5
12,001 to 30,000	20	5
30,001 to 50,000	30	10
50,001 to 100,000	50	15
100,001 to 500,000	80	25
500,001 to 1,000,000	100	35
1,000,001 to 2,000,000	135	45
2,000,001 to 3,000,000	165	55
3,000,001 or more	175	60

Note: For SI units, 1 ft = 0.3 m; 1 gal = 3.8 L.
[**30**:Table 4.3.2.1.1(b)]

Table 66.2.3.2.1.2 Stable Liquids [Operating Pressure: Greater than 2.5 psig (gauge pressure of 17 kPa)]

		Minimum Distance (ft)	
Type of Tank	Protection	From Property Line that Is or Can Be Built Upon, Including the Opposite Side of a Public Way	From Nearest Side of Any Public Way or from Nearest Important Building on the Same Property
Any type	Protection for exposures*	1½ × Table 66.2.3.2.1.1(b) value but shall not be less than 25 ft (7.6 m)	1½ × Table 66.2.3.2.1.1(b) value but shall not be less than 25 ft (7.6 m)
	None	3 × Table 66.2.3.2.1.1(b) value but shall not be less than 50 ft (15 m)	1½ × Table 66.2.3.2.1.1(b) value but shall not be less than 25 ft (7.6 m)

Note: For SI units, 1 ft = 0.3 m.
*See definition 3.3.192, Protection for Exposures.
[**30**:Table 4.3.2.1.2]

Table 66.2.3.2.1.3 Boil-Over Liquids

		Minimum Distance (ft)	
Type of Tank	Protection	From Property Line that Is or Can Be Built Upon, Including the Opposite Side of a Public Way[a]	From Nearest Side of Any Public Way or from Nearest Important Building on the Same Property[a]
Floating roof *[see Table 66.2.3.2.1.1(a)]*	Protection for exposures[b]	½ × diameter of tank	⅙ × diameter of tank
	None	Diameter of tank	⅙ × diameter of tank
Fixed roof	Approved foam or inerting system[c]	Diameter of tank	⅓ × diameter of tank
	Protection for exposures[b]	2 × diameter of tank	⅔ × diameter of tank
	None	4 × diameter of tank but need not exceed 350 ft	⅔ × diameter of tank

Note: For SI units, 1 ft = 0.3 m.
[a]The minimum distance shall not be less than 5 ft (1.5 m).
[b]See definition 3.3.192, Protection for Exposures.
[c]See NFPA 69, *Standard on Explosion Prevention Systems.*
[**30**:Table 4.3.2.1.3]

66.2.3.2.1.5 Tanks storing Class IIIB stable liquids shall be located in accordance with Table 66.2.3.2.1.5.

*Exception: If located within the same diked area as, or within the drainage path of, a tank storing a Class I or Class II liquid, the tank storing Class IIIB liquid shall be located in accordance with 66.2.3.2.1.1. [**30**:4.3.2.1.5]*

66.2.3.2.1.6 Where two tank properties of diverse ownership have a common boundary, the AHJ shall be permitted, with the written consent of the owners of the two properties, to substitute the distances provided in 4.3.2.2 of NFPA 30 for the minimum distances set forth in 4.3.2.1 of NFPA 30. [**30**:4.3.2.1.6]

66.2.3.2.1.7 Where end failure of a horizontal pressure tank or vessel can expose property, the tank or vessel shall be placed with its longitudinal axis parallel to the nearest important exposure. [**30**:4.3.2.1.7]

66.2.3.2.2 Shell-to-Shell Spacing Between Any Two Adjacent Aboveground Tanks.

66.2.3.2.2.1 Tanks storing Class I, Class II, or Class III stable liquids shall be separated by the distances given in Table 66.2.3.2.2.1.

Exception No. 1: Tanks storing crude petroleum that have individual capacities not exceeding 126,000 gal or 3000 bbl (480 m^3) and that are located at production facilities in isolated locations do not need to be separated by more than 3 ft (0.9 m).

*Exception No. 2: Tanks used only for storing Class IIIB liquids need not be separated by more than 3 ft (0.9 m) provided they are not within the same diked area as, or within the drainage path of, a tank storing a Class I or Class II liquid. [**30**:4.3.2.2.1]*

Table 66.2.3.2.1.4 Unstable Liquids

Type of Tank	Protection	Minimum Distance (ft): From Property Line that Is or Can Be Built Upon, Including the Opposite Side of a Public Way	Minimum Distance (ft): From Nearest Side of Any Public Way or from Nearest Important Building on the Same Property
Horizontal and vertical tanks with emergency relief venting to permit pressure not in excess of 2.5 psig (a gauge pressure 17 kPa)	Tank protected with any one of the following: approved water spray, approved inerting,* approved insulation and refrigeration, approved barricade	Table 66.2.3.2.1.1(b) value but not less than 25 ft (7.6 m)	Not less than 25 ft (7.6 m)
	Protection for exposures†	2½ × Table 66.2.3.2.1.1(b) value but not less than 50 ft (15 m)	Not less than 50 ft (15 m)
	None	5 × Table 66.2.3.2.1.1(b) value but not less than 100 ft (30 m)	Not less than 100 ft (30 m)
Horizontal and vertical tanks with emergency relief venting to permit pressure over of 2.5 psig (a gauge pressure of 17 kPa)	Tank protected with any one of the following: approved water spray, approved inerting,* approved insulation and refrigeration, approved barricade	2 × Table 66.2.3.2.1.1(b) value but not less than 50 ft (15 m)	Not less than 50 ft (15 m)
	Protection for exposures†	4 × Table 66.2.3.2.1.1(b) value but not less than 100 ft (30 m)	Not less than 100 ft (30 m)
	None	8 × Table 66.2.3.2.1.1(b) value but not less than 150 ft (45 m)	Not less than 150 ft (45 m)

Note: For SI units, 1 ft = 0.3 m.
*See NFPA 69, *Standard on Explosion Prevention Systems.*
†See definition 3.3.192, Protection for Exposures.
[**30**:Table 4.3.2.1.4]

Table 66.2.3.2.1.5 Class IIIB Liquids

Tank Capacity (gal)	Minimum Distance: From Property Line that Is or Can Be Built Upon, Including the Opposite Side of a Public Way (ft)	(m)	Minimum Distance: From Nearest Side of Any Public Way or from Nearest Important Building on the Same Property (ft)	(m)
12,000 or less	5	1.5	5	1.5
12,001 to 30,000	10	3	5	1.5
30,001 to 50,000	10	3	10	3
50,001 to 100,000	15	4.6	10	3
100,001 or more	15	4.6	15	4.6

Note: For SI units, 1 ft = 0.3 m; 1 gal = 3.8 L.
[**30**:Table 4.3.2.1.5]

66.2.3.2.2.2 A tank storing unstable liquid shall be separated from any other tank containing either an unstable liquid or a Class I, II, or III liquid by a distance not less than one-half the sum of their diameters. [**30**:4.3.2.2.2]

66.2.3.2.2.3 Where tanks are in a diked area containing Class I or Class II liquids or in the drainage path of Class I or Class II liquids and are compacted in three or more rows or in an irregular pattern, greater spacing or other means shall be permitted to be required by the AHJ to make tanks in the interior of the pattern accessible for fire-fighting purposes. [**30**:4.3.2.2.3]

66.2.3.2.2.4 The minimum horizontal separation between an LP-Gas container and a Class I, Class II, or Class IIIA liquid storage tank shall be 20 ft (6 m). Suitable measures shall be taken to prevent the accumulation of Class I, Class II, or Class IIIA liquids under adjacent LP-Gas containers such as by dikes, diversion curbs, or grading. Where flammable or combustible liquid storage tanks are within a diked area, the LP-Gas containers shall be outside the diked area and at least 10 ft (3 m) away from the centerline of the wall of the diked area.

Exception No. 1: If a tank storing a Class I, Class II, or Class IIIA liquid operates at pressures exceeding 2.5 psig (a gauge pressure of 17 kPa) or is equipped with emergency relief venting that will permit pressures to exceed 2.5 psig (a gauge pressure of 17 kPa), it shall be separated from an LP-Gas container by the distance given in 4.3.2.2.1 of NFPA 30. (See 66.2.3.2.2.1.)

Table 66.2.3.2.2.1 Minimum Tank Spacing (Shell-to-Shell)

Tank Diameter	Floating Roof Tanks	Fixed or Horizontal Tanks	
		Class I or II Liquids	Class IIIA Liquids
All tanks not over 150 ft (45 m) in diameter	⅙ × sum of adjacent tank diameters but not less than 3 ft (0.9 m)	⅙ × sum of adjacent tank diameters but not less than 3 ft (0.9 m)	⅙ × sum of adjacent tank diameters but not less than 3 ft (0.9 m)
Tanks larger than 150 ft (45 m) in diameter:			
If remote impounding is provided in accordance with 66.2.3.2.2.1	⅙ × sum of adjacent tank diameters	¼ × sum of adjacent tank diameters	⅙ × sum of adjacent tank diameters
If diking is provided in accordance with 66.2.3.2.2.2	¼ × sum of adjacent tank diameters	⅓ × sum of adjacent tank diameters	¼ × sum of adjacent tank diameters

[**30**:Table 4.3.2.2.1]

*Exception No. 2: The requirements of 66.2.3.2.2.4 shall not apply where LP-Gas containers of 125 gal (475 L) or less capacity are installed adjacent to fuel oil supply tanks of 660 gal (2500 L) or less capacity. [**30**:4.3.2.2.4]*

66.2.3.2.3 Control of Spills from Aboveground Tanks. Every tank that contains a Class I, Class II, or Class IIIA liquid shall be provided with means to prevent an accidental release of liquid from endangering important facilities and adjoining property or from reaching waterways. Such means shall meet the requirements of 4.3.2.3.1, 4.3.2.3.2, or 4.3.2.3.3 of NFPA 30 whichever is applicable. [**30**:4.3.2.3]

66.2.3.2.4 Tank Openings Other than Vents for Aboveground Tanks.

66.2.3.2.4.1 Each connection to an aboveground tank through which liquid can normally flow shall be provided with an internal or an external valve located as close as practical to the shell of the tank. [**30**:4.3.2.5.1]

66.2.3.2.4.2 Each connection below the liquid level through which liquid does not normally flow shall be provided with a liquidtight closure such as a valve, plug, or blind, or a combination of these. [**30**:4.3.2.5.2]

66.2.3.2.4.3 Openings for gauging on tanks storing Class I liquids shall be provided with a vaportight cap or cover. [**30**:4.3.2.5.3]

66.2.3.2.4.4* Fill pipes that enter the top of a tank shall terminate within 6 in. (150 mm) of the bottom of the tank. Fill pipes shall be installed or arranged so that vibration is minimized.

Exception No. 1: Fill pipes in tanks whose vapor space under the expected range of normal operating conditions is not in the flammable range or is inerted need not meet this requirement.

*Exception No. 2: Fill pipes in tanks handling liquids with minimal potential for accumulation of static electricity need not meet this requirement provided that the fill line is designed and the system is operated to avoid mist generation and an adequate level of residence time is provided downstream of filters or screens such that the charge generated is dissipated. [**30**:4.3.2.5.4]*

66.2.3.2.4.5 Filling and emptying connections for Class I, Class II, and Class IIIA liquids that are connected and disconnected shall be located outside of buildings at a location free from any source of ignition. They shall be located not less than 5 ft (1.5 m) away from any building opening. Such connections for any liquid shall be closed and liquidtight when not in use and shall be properly identified. [**30**:4.3.2.5.5]

66.2.4 Fire Prevention and Control.

66.2.4.1 Scope. Subsection 66.2.4 shall apply to the commonly recognized management techniques and fire control methods used to prevent or minimize the loss from fire or explosion in tank storage facilities. The wide range in size, design, and location of tank storage facilities shall preclude the inclusion of detailed fire prevention and control methods applicable to all such facilities. The AHJ shall be permitted to be consulted on specific cases, where applicable; otherwise, qualified engineering judgment shall be exercised. [**30**:4.5.1]

66.2.4.2 General Requirements. Tank storage facilities shall have fire prevention and control for life safety, for minimizing property loss, and for reducing fire exposure to adjoining facilities resulting from fire and explosion. Compliance with 66.2.4.3 through 66.2.4.7 shall be deemed as meeting the requirements of 66.2.4.2. [**30**:4.5.2]

66.2.4.3 Control of Ignition Sources.

66.2.4.3.1 Precautions shall be taken to prevent the ignition of flammable vapors from sources such as the following:

(1) Open flames
(2) Lightning
(3) Hot surfaces
(4) Radiant heat
(5) Smoking
(6) Cutting and welding
(7) Spontaneous ignition
(8) Frictional heat or sparks
(9) Static electricity
(10) Electrical sparks
(11) Stray currents
(12) Ovens, furnaces, and heating equipment [**30**:4.5.3.1]

66.2.4.3.2 Smoking shall be permitted only in designated and properly identified areas. [**30**:4.5.3.2]

66.2.4.3.3* Welding, cutting, and similar spark-producing operations shall not be permitted in areas containing flammable liquids until a written permit authorizing such work has been issued. The permit shall be issued by a person in authority

following inspection of the area to assure that proper precautions have been taken and will be followed until the job is completed. [**30:**4.5.3.3]

66.2.4.3.4* Static Electricity. All equipment such as tanks, machinery, and piping shall be designed and operated to prevent electrostatic ignitions. All metallic equipment where an ignitable mixture could be present shall be bonded or grounded. The bond or ground or both shall be physically applied or shall be inherently present by the nature of the installation. Any electrically isolated section of metallic piping or equipment shall be bonded or grounded to prevent hazardous accumulation of static electricity. All nonmetallic equipment and piping where an ignitable mixture could be present shall be given special consideration. [**30:**4.5.3.4]

66.2.4.3.5 Electrical Installations. Design, selection, and installation of electrical wiring and electrical utilization equipment shall meet the requirements of Chapter 8 of NFPA 30. [**30:**4.5.3.5]

66.2.4.4 Management of Fire Hazards. The extent of fire prevention and control provided for tank storage facilities shall be determined by an engineering evaluation of the installation and operation, followed by the application of sound fire protection and process engineering principles. The evaluation shall include, but not be limited to, the following:

(1) Analysis of fire and explosion hazards of the facility
(2) Analysis of local conditions, such as exposure to and from adjacent properties, flood potential, or earthquake potential
(3) Fire department or mutual aid response [**30:**4.5.4]

66.2.4.5 Fire Control. A fire-extinguishing system in accordance with an applicable NFPA standard shall be provided or shall be available for vertical atmospheric fixed-roof storage tanks larger than 50,000 gal or 1190 bbl (190 m^3) capacity, storing Class I liquids, if located in a congested area where there is an unusual exposure hazard to the tank from adjacent property or to adjacent property from the tank. Fixed-roof tanks storing Class II or III liquids at temperatures below their flash points and floating-roof tanks storing any liquid generally shall not require protection when installed in compliance with Section 4.3 of NFPA 30. [**30:**4.5.5]

66.2.4.6 Emergency Planning and Training.

66.2.4.6.1 An emergency action plan, consistent with the available equipment and personnel, shall be established to respond to fire or other emergencies. This plan shall address the following:

(1) Procedures to be used in case of fire, such as sounding the alarm, notifying the fire department, evacuating personnel, and controlling and extinguishing the fire
(2) Appointment and training of persons to carry out fire safety duties
(3) Maintenance of fire protection equipment
(4) Holding fire drills
(5) Shutdown or isolation of equipment to reduce the escape of liquid
(6) Alternate measures for the safety of personnel while any fire protection equipment is shut down [**30:**4.5.6.1]

66.2.4.6.2 Personnel responsible for the use and operation of fire protection equipment shall be trained in the use of that equipment. Refresher training shall be conducted at least annually. The personnel responsible shall be able to demonstrate knowledge of the use or operation of the fire protection equipment. [**30:**4.5.6.2]

66.2.4.6.3 Planning of effective fire control measures shall be coordinated with local emergency response agencies. This planning shall include, but not be limited to, the identification of all tanks by location, contents, size, and hazard identification as required in 4.6.2.1 of NFPA 30. [**30:**4.5.6.3]

66.2.4.6.4 Procedures shall be established to provide for safe shutdown of tank storage facilities under emergency conditions. Provisions shall be made for periodic training, inspection, and testing of associated alarms, interlocks, and controls. [**30:**4.5.6.4]

66.2.4.6.5 The emergency procedures shall be kept readily available in an operating area and updated regularly. [**30:**4.5.6.5]

66.2.4.6.6 Where premises are likely to be unattended for considerable periods of time, a summary of the emergency plan shall be posted or located in a strategic and accessible location. [**30:**4.5.6.6]

66.2.4.7 Inspection and Maintenance.

66.2.4.7.1 All fire protection equipment shall be properly maintained and periodic inspections and tests shall be done in accordance with both standard practice and equipment manufacturer's recommendations. [**30:**4.5.7.1]

66.2.4.7.2 Maintenance and operating practices at tank storage facilities shall control leakage and prevent spillage of liquids. [**30:**4.5.7.2]

66.2.4.7.3 Ground areas around tank storage facilities shall be kept free of weeds, trash, or other unnecessary combustible materials. [**30:**4.5.7.3]

66.2.4.7.4 Accessways established for movement of personnel shall be maintained clear of obstructions to permit orderly evacuation and ready access for manual fire fighting. [**30:**4.5.7.4]

66.2.4.7.5 Combustible waste material and residues in operating areas shall be kept to a minimum, stored in covered metal containers, and disposed of daily. [**30:**4.5.7.5]

66.2.5 Operations and Maintenance of Tanks.

66.2.5.1 Prevention of Overfilling of Tanks.

66.2.5.1.1 Aboveground tanks at terminals that receive and transfer Class I liquids from mainline pipelines or marine vessels shall follow formal written procedures to prevent overfilling of tanks utilizing one of the following methods of protection:

(1) Tanks gauged at frequent intervals by personnel continuously on the premise during product receipt with frequent acknowledged communication maintained with the supplier so flow can be promptly shut down or diverted.
(2) Tanks equipped with a high-level detection device that is independent of any gauging equipment. Alarm shall be located where personnel who are on duty throughout product transfer can promptly arrange for flow stoppage or diversion.
(3) Tanks equipped with an independent high-level detection system that will automatically shut down or divert flow.
(4) Alternatives to instrumentation described in 66.2.5.1.1(2) and 66.2.5.1.1(3) where approved by the AHJ as affording equivalent protection. [**30:**4.6.1.1]

66.2.5.1.2 Instrumentation systems covered in 66.2.5.1.1(2) and 66.2.5.1.1(3) shall be electrically supervised or equivalent. [**30:**4.6.1.2]

66.2.5.1.3 Formal written procedures required by 66.2.5.1.1 shall include the following:

(1) Instructions covering methods to check for proper lineup and receipt of initial delivery to tank designated to receive shipment.
(2) Provision for training and monitoring the performance of operating personnel by terminal supervision.
(3) Schedules and procedures for inspection and testing of gauging equipment and high-level instrumentation and related systems. Inspection and testing intervals shall be acceptable to the AHJ but shall not exceed 1 year. [30:4.6.1.3]

66.2.5.1.4 An underground tank shall be equipped with overfill prevention equipment that will operate as follows:

(1) Automatically shut off the flow of liquid into the tank when the tank is no more than 95 percent full
(2) Alert the transfer operator when the tank is no more than 90 percent full by restricting the flow of liquid into the tank or triggering the high-level alarm
(3) Other methods approved by the AHJ [30:4.6.1.4]

66.2.5.1.5 Shop-fabricated aboveground atmospheric storage tanks, constructed to the recognized standards of 4.2.3.1 of NFPA 30 or approved equivalents, shall meet the requirements of 4.6.1.5.1 through 4.6.1.5.4 and 4.5.7 of NFPA 30 whenever the vertical length from the tank bottom to the top of the fill, normal vent, or emergency vent exceeds 12 ft (3.7 m). [30:4.6.1.5]

66.2.5.1.5.1 An approved means shall be provided to promptly notify the tank filling operator of the pending completion of the tank fill operation at the fill connection. [30:4.6.1.5.1]

66.2.5.1.5.2 An approved means shall be provided to stop delivery of liquid to the tank prior to the complete filling of the tank. [30:4.6.1.5.2]

66.2.5.1.5.3 In no case shall these provisions restrict or interfere with the proper functioning of the normal vent or emergency vent. [30:4.6.1.5.3]

66.2.5.1.5.4 The manufacturer of the tank shall be consulted to determine if reinforcement of the tank is required. If reinforcement is deemed necessary, it shall be done. [30:4.6.1.5.4]

66.2.5.2 Identification and Security.

66.2.5.2.1 Emergency Response Identification. A sign or marking that meets the requirements of NFPA 704, *Standard System for the Identification of the Hazards of Materials for Emergency Response,* or an equivalent system, shall be applied to storage tanks containing liquids. The marking shall not need to be applied directly to the tank but shall be located where it can readily be seen, such as on the shoulder of an accessway or walkway to the tank or tanks or on the piping outside of the diked area. If more than one tank is involved, the markings shall be so located that each tank can readily be identified. [30:4.6.2.1]

66.2.5.2.2 Unsupervised, isolated aboveground storage tanks shall be secured and marked in such a manner as to identify the fire hazards of the tank and the tank's contents to the general public. The area in which the tank is located shall be protected from tampering or trespassing, where necessary. [30:4.6.2.2]

66.2.5.3 Tanks in Areas Subject to Flooding.

66.2.5.3.1 Water Loading. The filling of a tank to be protected by water loading shall be started as soon as floodwaters are predicted to reach a dangerous flood stage. Where independently fueled water pumps are relied upon, sufficient fuel shall be available at all times to permit continuing operations until all tanks are filled. Tank valves shall be locked in a closed position when water loading has been completed. [30:4.6.3.1]

66.2.5.3.2 Operating Instructions. Operating instructions or procedures to be followed in a flood emergency shall be readily available. [30:4.6.3.2]

66.2.5.3.3 Personnel Training. Personnel relied upon to carry out flood emergency procedures shall be informed of the location and operation of valves and other equipment necessary to effect the intent of these requirements. [30:4.6.3.3]

66.2.5.4 Temporary or Permanent Removal from Service of Aboveground Tanks.

66.2.5.4.1* Closure of Storage Tanks. Aboveground tanks taken out of service or abandoned shall be emptied of liquid, rendered vapor-free, and safeguarded against trespassing. [30:4.6.4.1]

66.2.5.4.2 Reuse of Aboveground Storage Tanks. Only those used tanks that comply with the applicable sections of this code and are approved by the AHJ shall be installed for flammable or combustible liquids service. [30:4.6.4.2]

66.2.5.5 Temporary or Permanent Removal from Service of Underground Tanks.

66.2.5.5.1 General. The procedures outlined in 66.2.5.5 shall be followed when taking underground tanks temporarily out of service, closing them in place permanently, or removing them. All applicable safety procedures associated with working in proximity to flammable and combustible materials shall be strictly adhered to. *(See Annex C of NFPA 30 for additional information.)* [30:4.6.5.1]

66.2.5.5.2 Temporary Closure. Tanks shall be rendered temporarily out of service only when it is planned that they will be returned to active service, closed in place permanently, or removed within a reasonable period not exceeding 1 year. The following requirements shall be met:

(1) Corrosion protection and release detection systems shall be maintained in operation.
(2) The vent line shall be left open and functioning.
(3) The tank shall be secured against tampering.
(4) All other lines shall be capped or plugged. [30:4.6.5.2]

66.2.5.5.3 Tanks remaining temporarily out of service for more than 1 year shall be permanently closed in place or removed in accordance with 66.2.5.5.4 or 66.2.5.5.5, as applicable. [30:4.6.5.3]

66.2.5.5.4 Permanent Closure in Place. Tanks shall be permitted to be permanently closed in place if approved by the AHJ. All of the following requirements shall be met:

(1) All applicable AHJs shall be notified.
(2) *A safe workplace shall be maintained throughout the prescribed activities.
(3) All flammable and combustible liquids and residues shall be removed from the tank, appurtenances, and piping and shall be properly disposed of.
(4) The tank shall be made safe by either purging it of flammable vapors or inerting the potential explosive atmosphere in the tank. Confirmation that the atmosphere in the tank is safe shall be by periodic testing of the atmosphere using a combustible gas indicator, if purging, or an oxygen meter, if inerting.

(5) Access to the tank shall be made by careful excavation to the top of the tank.
(6) All exposed piping, gauging and tank fixtures, and other appurtenances, except the vent, shall be disconnected and removed.
(7) The tank shall be completely filled with an inert solid material.
(8) The tank vent and remaining underground piping shall be capped or removed.
(9) The tank excavation shall be backfilled. [**30:**4.6.5.4]

66.2.5.5.5 Removal and Disposal. Underground tanks shall be removed in accordance with the following requirements:

(1) The steps described in 66.2.5.5.4(1) through 66.2.5.5.4(5) shall be followed.
(2) All exposed piping, gauging and tank fixtures, and other appurtenances, including the vent, shall be disconnected and removed.
(3) All openings shall be plugged, leaving a ¼ in. (6 mm) opening to avoid buildup of pressure in the tank.
(4) The tank shall be removed from the excavated site and shall be secured against movement.
(5) Any corrosion holes shall be plugged.
(6) The tank shall be labeled with its former contents, present vapor state, vapor-freeing method, and a warning against reuse.
(7) The tank shall be removed from the site promptly, preferably the same day. [**30:**4.6.5.5]

66.2.5.5.6 Temporary Storage of Removed Tanks. If it is necessary to temporarily store a tank that has been removed, it shall be placed in a secure area where public access is restricted. A ¼ in. (6 mm) opening shall be maintained to avoid buildup of pressure in the tank. [**30:**4.6.5.6]

66.2.5.5.7 Disposal of Tanks. Disposal of tanks shall meet the following requirements:

(1) Before a tank is cut up for scrap or landfill, the atmosphere in the tank shall be tested in accordance with 66.2.5.5.4(4) to ensure that it is safe.
(2) The tank shall be made unfit for further use by cutting holes in the tank heads and shell. [**30:**4.6.5.7]

66.2.5.5.8 Documentation. All necessary documentation shall be prepared and maintained in accordance with all federal, state, and local rules and regulations. [**30:**4.6.5.8]

66.2.5.5.9 Reuse of Underground Tanks. Only those used tanks that comply with the applicable sections of this *Code* and are approved by the AHJ shall be installed for flammable or combustible liquids service. [**30:**4.6.5.9]

66.2.5.5.10 Change of Service of Underground Tanks. Tanks that undergo any change of stored product shall meet the requirements of Section 4.2 of NFPA 30. [**30:**4.6.5.10]

66.2.5.5.11 Entry, Cleaning or Repair of Tanks or Containers. Tanks or containers, operating at nominal atmospheric pressure, that contain or have contained flammable and combustible liquids or other hazardous materials and related vapors or residues, shall be safeguarded in accordance with NFPA 326, *Standard for the Safeguarding of Tanks and Containers for Entry, Cleaning, or Repair,* prior to entry, cleaning, repair, or lining with a protective coating.

66.2.5.6* Leak Detection and Inventory Records for Underground Tanks. Accurate inventory records or a leak detection program shall be maintained on all Class I liquid storage tanks for indication of possible leakage from the tanks or associated piping. [**30:**4.6.6]

66.2.5.7 Tank Maintenance.

66.2.5.7.1* Each tank shall be inspected and maintained to ensure compliance with the requirements of this *Code.* Testing requirements for tanks shall be in accordance with Section 4.4 of NFPA 30. [**30:**4.6.7.1]

66.2.5.7.2 Each tank shall be maintained liquidtight. Each tank that is leaking shall be emptied of liquid or repaired in a manner acceptable to the AHJ. [**30:**4.6.7.2]

66.2.5.7.3 Tanks that have been structurally damaged, have been repaired or reconstructed, or are suspected of leaking shall be tested in accordance with 4.4.1 of NFPA 30 or in a manner acceptable to the AHJ. [**30:**4.6.7.3]

66.2.5.7.4* Tanks and all tank appurtenances, including normal vents and emergency vents and related devices, shall be properly maintained to ensure that they function as intended. [**30:**4.6.7.4]

66.2.5.7.5 Openings for gauging on tanks storing Class I liquids shall be provided with a vaportight cap or cover. Such covers shall be closed when not gauging. [**30:**4.6.7.5]

66.3 Piping Systems.

66.3.1 Scope.

66.3.1.1 Section 66.3 shall apply to piping systems consisting of pipe, tubing, flanges, bolting, gaskets, valves, fittings, flexible connectors, the pressure-containing parts of other components such as expansion joints and strainers, and devices that serve such purposes as mixing, separating, snubbing, distributing, metering, controlling flow, or secondary containment of liquids and associated vapors. [**30:**5.1.1]

66.3.1.2 Section 66.3 shall not apply to any of the following:

(1) Tubing or casing on any oil or gas wells and any piping connected directly thereto
(2) Motor vehicles, aircraft, boats, or piping that are integral to a stationary engine assembly
(3) Piping within the scope of any applicable boiler and pressure vessel code [**30:**5.1.2]

66.3.2 General Requirements.

66.3.2.1 Performance Standards. The design, fabrication, assembly, test, and inspection of piping systems shall be suitable for the expected working pressures and structural stresses. Compliance with applicable sections of ASME B31, *Code for Pressure Piping,* and the provisions of this chapter shall be considered prima facie evidence of compliance with the foregoing provisions. [**30:**5.2.1]

66.3.2.2 Tightness of Piping. Piping systems shall be maintained liquidtight. A piping system that has leaks that constitute a hazard shall be emptied of liquid or repaired in a manner acceptable to the AHJ. [**30:**5.2.2]

66.4 Container and Portable Tank Storage.

66.4.1 General.

66.4.1.1 Scope.

66.4.1.1.1 Section 66.4 shall apply to the storage of liquids in drums or other containers that do not exceed 119 gal (450 L) individual capacity, in portable tanks that do not exceed 660 gal (2500 L) individual capacity, and in intermediate bulk containers

that do not exceed 793 gal (3000 L) and to limited transfers incidental thereto. Section 66.4 shall also apply to overpack drums when used for temporary containment of containers that do not exceed 60 gal (230 L) capacity. Such overpack containers shall be treated as containers as defined in 3.3.7 of NFPA 30. [30:6.1.1]

66.4.1.1.2 Section 66.4 shall not apply to the following:

(1) Containers, intermediate bulk containers, and portable tanks that are used in process areas, as covered by Chapter 5 of NFPA 30
(2) Liquids in the fuel tanks of motor vehicles, aircraft, boats, or portable or stationary engines
(3) Beverages, where packaged in individual containers that do not exceed 1.3 gal (5 L) capacity
(4) Medicines, foodstuffs, cosmetics, and other consumer products that contain not more than 50 percent by volume of water-miscible liquids, with the remainder of the solution not being flammable where packaged in individual containers that do not exceed 1.3 gal (5 L) capacity
(5) Liquids that have no fire point when tested by ASTM D 92, *Standard Test Method for Flash and Fire Points by Cleveland Open Cup*, up to the boiling point of the liquid or up to a temperature at which the sample being tested shows an obvious physical change
(6) Liquids with a flash point greater than 95°F (35°C) in a water-miscible solution or in dispersion with a water and inert (noncombustible) solids content of more than 80 percent by weight, which do not sustain combustion when tested using the "Method of Testing for Sustained Combustibility," per 49 CFR 173, Appendix H, or the UN *Recommendations on the Transport of Dangerous Goods*
(7) Distilled spirits and wines in wooden barrels or casks [30:6.1.2]

66.4.1.2 General Provisions.

66.4.1.2.1 For the purpose of Section 66.4, unstable liquids shall be treated as Class IA liquids. [30:6.1.3.1]

66.4.1.2.2 For the purposes of Section 66.4, protected storage installed after January 1, 1997, shall mean storage installed after January 1, 1997 that is protected in accordance with Section 6.8 of NFPA 30. All other storage shall be considered to be unprotected storage unless an alternate means of protection has been approved by the AHJ. *(See 6.8.2.4 and 6.8.3 of NFPA 30.)*

Exception: As provided for in Section 6.5 of NFPA 30. [30:6.1.3.2]

66.4.2 Design, Construction, and Capacity of Containers.

66.4.2.1 Only the following approved containers, intermediate bulk containers, and portable tanks shall be used:

(1) Metal containers, metal intermediate bulk containers, and metal portable tanks meeting the requirements of, and containing products authorized by, the U.S. Department of Transportation Hazardous Materials Regulations, 49 CFR or by Part 6 of the UN *Recommendations on the Transport of Dangerous Goods* shall be acceptable.
(2) Plastic containers meeting the requirements of, and used for petroleum products within the scope of, one or more of the following specifications shall be acceptable:
   (a) ASTM F 852, *Standard for Portable Gasoline Containers for Consumer Use*
   (b) ASTM F 976, *Standard for Portable Kerosene Containers for Consumer Use*
   (c) ANSI/UL 1313, *Nonmetallic Safety Cans for Petroleum Products*
(3) Plastic containers meeting the requirements of and containing products authorized by the U.S. Department of Transportation Hazardous Materials Regulations, 49 CFR or by Part 6 of the UN *Recommendations on the Transport of Dangerous Goods* shall be acceptable.
(4) Fiber drums that meet the following shall be acceptable:
   (a) Requirements of Item 296 of the *National Motor Freight Classification* (NMFC) or Rule 51 of the *Uniform Freight Classification* (UFC) for Types 2A, 3A, 3B-H, 3B-L, or 4A
   (b) Requirements of, and containing liquid products authorized by, either the U.S. Department of Transportation Hazardous Materials Regulations, 49 CFR Chapter I, 49 CFR or U.S. Department of Transportation exemption
(5) *Rigid nonmetallic intermediate bulk containers that meet the requirements of and containing products authorized by the U.S. Department of Transportation Hazardous Materials Regulations, 49 CFR, or by Part 6 of the UN *Recommendations on the Transport of Dangerous Goods* for Classes 31H1, 31H2, and 31HZ1 shall be acceptable. For protected storage, rigid nonmetallic intermediate bulk containers shall be subjected to a standard fire test that demonstrates acceptable inside storage fire performance and shall be listed and labeled. [30:6.2.1]

66.4.2.2 Each portable tank or intermediate bulk container shall be provided with one or more devices installed in the top with sufficient emergency venting capacity to limit internal pressure under fire exposure conditions to 10 psig (a gauge pressure of 70 kPa) or 30 percent of the bursting pressure of the portable tank, whichever is greater. The total venting capacity shall be not less than that specified in 4.2.5.2.3 or 4.2.5.2.5 of NFPA 30. At least one pressure-actuated vent having a minimum capacity of 6000 ft^3 (170 m^3) of free air per hour at 14.7 psia (1 bar) and 60°F (15.6°C) shall be used. It shall be set to open at not less than 5 psig (a gauge pressure of 35 kPa). If fusible vents are used, they shall be actuated by elements that operate at a temperature not exceeding 300°F (150°C). Where plugging of a pressure-actuated vent can occur, such as when used for paints, drying oils, and similar materials, fusible plugs or venting devices that soften to failure at a maximum of 300°F (150°C) under fire exposure shall be permitted to be used for the entire emergency venting requirement. [30:6.2.2]

66.4.2.3 The maximum allowable size of a container or metal portable tank shall not exceed that specified in Table 66.4.2.3.

Exception: As provided for in Section 6.1, 6.2.3.1, 6.2.3.2, and 6.2.3.3 of NFPA 30. [30:6.2.3]

66.4.2.3.1 Medicines, beverages, foodstuffs, cosmetics, and other common consumer products, where packaged according to commonly accepted practices for retail sales, shall be exempt from the requirements of 6.2.1 and 6.2.3 of NFPA 30. [30:6.2.3.1]

66.4.2.3.2 Class IA and Class IB liquids shall be permitted to be stored in glass containers of not more than 1.3 gal (5 L) capacity, if the required liquid purity (such as ACS analytical reagent grade or higher) would be affected by storage in metal containers or if the liquid can cause excessive corrosion of the metal container. [6.2.3.2]

66.4.2.3.3 Leaking or damaged containers up to 60 gal (230 L) capacity shall be permitted to be stored temporarily in accordance with this chapter, provided they are enclosed in overpack containers. To be considered protected in accordance with Section 6.8 of NFPA 30 the overpack container shall be constructed

Table 66.4.2.3 Maximum Allowable Size — Containers, Intermediate Bulk Containers, and Portable Tanks

	Flammable Liquids			Combustible Liquids	
Type	Class IA	Class IB	Class IC	Class II	Class III
Glass	1.05 pt (0.5 L)	1.05 qt (1 L)	1.3 gal (5 L)	1.3 gal (5 L)	5.3 gal (20 L)
Metal (other than drums) or approved plastic	1.3 gal (5 L)	5.3 gal (20 L)	5.3 gal (20 L)	5.3 gal (20 L)	5.3 gal (20 L)
Safety cans	2.6 gal (10 L)	5.3 gal (20 L)	5.3 gal (20 L)	5.3 gal (20 L)	5.3 gal (20 L)
Metal drum (e.g., UN 1A1 or 1A2)	119 gal (450 L)	119 gal (450 L)	119 gal (450 L)	119 gal (450 L)	119 gal (450 L)
Approved metal portable tanks and IBCs	793 gal (3000 L)	793 gal (3000 L)	793 gal (3000 L)	793 gal (3000 L)	793 gal (3000 L)
Rigid plastic IBCs (UN 31H1 or 31H2) and composite IBCs with rigid inner receptacle (UN31HZ1)	NP	NP	NP	793 gal (3000 L)	793 gal (3000 L)
Composite IBCs with flexible inner receptacle (UN 31HZ2) and flexible IBCs (UN 13H, UN 13L, and UN 13M)	NP	NP	NP	NP	NP
Bag-in-Box Nonbulk	NP	NP	NP	NP	NP
Polyethylene UN 1H1, or as authorized by DOT exemption	1.3 gal (5 L)	5.3 gal (20 L)*	5.3 gal (20 L)*	119 gal (450 L)	119 gal (450 L)
Fiber drum NMFC or UFC Type 2A; Types 3A, 3B-H, or 3B-L; or Type 4A	NP	NP	NP	119 gal (450 L)	119 gal (450 L)

Note: NP — Not permitted.
*For Class IB and IC water-miscible liquids, the maximum allowable size of plastic container is 60 gal (230 L), if stored and protected in accordance with Table 66.4.8.2(g).
[**30**:Table 6.2.3]

of the same material as the leaking or damaged container. Metal overpack containers shall be considered nonrelieving containers. [**30**:6.2.3.3]

66.4.3 Design, Construction, and Capacity of Storage Cabinets.

66.4.3.1 The volume of Class I, Class II, and Class IIIA liquids stored in a storage cabinet shall not exceed 120 gal (454 L). [**30**:6.3.1]

66.4.3.2 The number of storage cabinets located in any one fire area shall not exceed three.

Exception No. 1: In an industrial occupancy, additional storage cabinets, in groups of not more than three cabinets, shall be permitted to be located in the same fire area, if a minimum separation of 100 ft (30 m) is maintained between each group.

*Exception No. 2: In an industrial occupancy that is protected by an automatic sprinkler system that is designed and installed in accordance with NFPA 13, the number of cabinets in any one group shall be permitted to be increased to six. [**30**:6.3.2]*

66.4.3.3 Storage cabinets that meet at least one of the following sets of requirements shall be acceptable for storage of liquids:

(1) Storage cabinets that are designed and constructed to limit the internal temperature at the center of the cabinet and 1 in. (25 mm) from the top of the cabinet to not more than 325°F (163°C), when subjected to a 10-minute fire test that simulates the fire exposure of the standard time–temperature curve specified in NFPA 251, *Standard Methods of Tests of Fire Endurance of Building Construction and Materials*, shall be acceptable. All joints and seams shall remain tight and the door shall remain securely closed during the test.

(2) Metal storage cabinets that are constructed in the following manner shall be acceptable:

(a) The bottom, top, door, and sides of the cabinet shall be at least No. 18 gauge sheet steel and shall be double-walled, with 1½ in. (38 mm) air space.

(b) Joints shall be riveted, welded, or made tight by some equally effective means.

(c) The door shall be provided with a three-point latch arrangement, and the door sill shall be raised at least 2 in. (50 mm) above the bottom of the cabinet to retain spilled liquid within the cabinet.

(3) Wooden cabinets constructed in the following manner shall be acceptable:

(a) The bottom, sides, and top shall be constructed of exterior grade plywood that is at least 1 in. (25 mm) thick and of a type that will not break down or delaminate under fire conditions.

(b) All joints shall be rabbetted and shall be fastened in two directions with wood screws. Where more than one door is used, there shall be a rabbetted overlap of not less than 1 in. (25 mm).

(c) Doors shall be equipped with a means of latching and hinges shall be constructed and mounted in such a manner as to not lose their holding capacity when subjected to fire exposure.

(d) A raised sill or pan capable of containing a 2 in. (50 mm) depth of liquid shall be provided at the bottom of the cabinet to retain spilled liquid within the cabinet.

(4) Listed storage cabinets that have been constructed and tested in accordance with 66.4.3.3(1) shall be acceptable. [30:6.3.3]

66.4.3.4* The storage cabinet shall not be required by this *Code* to be vented for fire protection purposes, and vent openings shall be sealed with the bungs supplied with the cabinet or with bungs specified by the cabinet manufacturer. However, if the storage cabinet is vented for any reason, the cabinet shall be vented directly to outdoors in such a manner that will not compromise the specified performance of the cabinet and in a manner that is acceptable to the AHJ. [30:6.3.4]

66.4.3.5 Storage cabinets shall be marked in conspicuous lettering: [30:6.3.5]

FLAMMABLE — KEEP FIRE AWAY.

66.4.4* Design, Construction, and Operation of Inside Liquid Storage Areas.

66.4.4.1 Scope. Subsection 66.4.4 shall apply to inside areas where the primary function is the storage of liquids. This shall include inside rooms, cutoff rooms, attached buildings, liquid warehouses, and hazardous material storage lockers that are used as inside storage areas. *(See 66.4.5 for storage of liquids in other types of occupancies.)*[30:6.4.1]

66.4.4.2 Design and Construction Requirements.

66.4.4.2.1 All storage areas shall be constructed to meet the specified fire resistance ratings in Table 66.4.4.2.1. Such construction shall comply with the test specifications given in NFPA 251. [30:6.4.2.1]

66.4.4.2.2 Openings in interior walls to adjacent rooms or buildings and openings in exterior walls with fire resistance ratings shall be provided with normally closed, listed fire doors with fire protection ratings corresponding to the fire resistance rating of the wall as specified in Table 66.4.4.2.2. Such doors shall be permitted to be arranged to stay open during material handling operations if the doors are designed to close automatically in a fire emergency by provision of listed closure devices. Fire doors shall be installed in accordance with NFPA 80, *Standard for Fire Doors and Fire Windows.* [30:6.4.2.2]

66.4.4.2.3 Exterior walls shall be constructed to provide ready access for fire-fighting operations by means of access openings, windows, or lightweight noncombustible wall panels.

Exception: This shall not apply to inside rooms. [30:6.4.2.3]

Table 66.4.4.2.1 Fire Resistance Ratings for Inside Liquid Storage Areas

Type of Storage Area	Fire Resistance Rating (hr)		
	Interior Walls,[a] Ceilings, Intermediate Floors	Roofs	Exterior Walls
Inside rooms			
Floor area ≤150 ft^2 (≤14 m^2)	1	—	—
Floor area >150 ft^2 and ≤500 ft^2 (>14 m^2 and ≤46 m^2)	2	—	—
Cutoff rooms and attached buildings			
Floor area ≤300 ft^2 (≤28 m^2)	1	1[b]	—
Floor area >300 ft^2 (≤28 m^2)	2	2[b]	2[c]
Liquid warehouses[d,e]	4[f]	—	2[g] or 4[h]

Note: For SI units, 1 ft^2 = 0.09 m^2.

[a]Between liquid storage areas and any adjacent areas not dedicated to liquid storage.

[b]Roofs of attached buildings, one story in height, shall be permitted to be of lightweight, noncombustible construction if the separating interior walls have minimum 3 ft (0.9 m) parapets.

[c]Where other portions of buildings or other properties are exposed.

[d]Fire resistance ratings for liquid warehouses storing only Class IIIB liquids, which are not heated above their flash point, shall be permitted to be reduced to 2 hours.

[e]Fire resistance ratings for liquid warehouses protected in accordance with 66.4.8.2 shall be permitted to be reduced to 2 hours.

[f]This shall be a fire wall as defined in NFPA 221, *Standard for Fire Walls and Fire Barrier Walls.*

[g]For exposing walls that are located more than 10 ft (3 m) but less than 50 ft (15 m) from an important building or line of adjoining property that can be built upon.

[h]For exposing walls that are located 10 ft (3 m) or less from an important building or line of adjoining property that can be built upon. [30:Table 6.4.2.1]

Table 66.4.4.2.2 Fire Protection Ratings for Fire Doors

Fire Resistance Rating of Wall[a] (hr)	Fire Protection Rating of Door (hr)
1	¾
2	1½
4	3[b]

[a] As required by Table 66.4.4.2.1.

[b] One fire door required on each side of interior openings for attached liquid warehouses. [30:Table 6.4.2.2]

66.4.4.2.4* Where Class IA liquids or unstable liquids are dispensed or stored in containers larger than 1 gal (3.8 L), rooms shall be designed to direct flame, combustion gases, and pressures resulting from a deflagration away from important buildings or occupied areas through the use of damage-limiting construction. The damage-limiting construction design shall be in accordance with recognized engineering standards and shall be acceptable to the AHJ.

*Exception: This shall not apply to inside rooms. [**30**:6.4.2.4]*

66.4.4.2.5* Curbs, scuppers, special drains, or other suitable means shall be provided to prevent the flow of liquids under emergency conditions into adjacent building areas. If a drainage system is used, it shall have sufficient capacity to carry the expected discharge of water from fire protection systems and hose streams.

Exception No. 1: Where none of the containers stored in a storage area exceed 10 gal (38 L), the storage area need not meet this requirement.

Exception No. 2: Where only Class IIIB liquids are stored in a storage area, regardless of container size, the storage area need not meet this requirement.

*Exception No. 3: Where unsaturated polyester resins (UPRs) containing not more than 50 percent by weight of Class IC, Class II, or Class IIIA liquid constituents are protected in accordance with Table 66.4.8.2(k), the storage area need not meet this requirement. [**30**:6.4.2.5]*

66.4.4.2.6 In inside storage rooms, electrical wiring and utilization equipment for Class I liquid storage shall be Class I, Division 2, and electrical wiring and utilization equipment in inside storage rooms used for the storage of Class II and Class III liquids shall be suitable for general purpose.

*Exception: Class I, Division 2 requirements shall apply to Class II and III liquids when stored at temperatures above their flash points. [**30**:6.4.2.6]*

66.4.4.2.6.1 Installation of electrical wiring and utilization equipment shall meet the requirements of Chapter 8 of NFPA 30. [**30**:6.4.2.6.1]

66.4.4.2.7 Liquid storage areas where dispensing is conducted shall be provided with either a gravity or a continuous mechanical exhaust ventilation system. Mechanical ventilation shall be used if Class I liquids are dispensed within the room. [**30**:6.4.2.7]

66.4.4.2.7.1 Exhaust air shall be taken from a point near a wall on one side of the room and within 12 in. (300 mm) of the floor, with one or more make-up inlets located on the opposite side of the room within 12 in. (300 mm) of the floor. The location of both the exhaust and inlet air openings shall be arranged to provide, as far as practicable, air movements across all portions of the floor to prevent accumulation of flammable vapors. Exhaust from the room shall be directly to the exterior of the building without recirculation.

*Exception: Recirculation is permitted where it is monitored continuously using a fail-safe system that is designed to automatically sound an alarm, stop recirculation, and provide full exhaust to the outside in the event that vapor–air mixtures in concentrations over one-fourth of the lower flammable limit are detected. [**30**:6.4.2.7.1]*

66.4.4.2.7.1.1 If ducts are used, they shall not be used for any other purpose and shall comply with NFPA 91. If make-up air to a mechanical system is taken from within the building, the opening shall be equipped with a fire door or damper, as required in NFPA 91. For gravity systems, the make-up air shall be supplied from outside the building. [**30**:6.4.2.7.1.1]

66.4.4.2.7.2 Mechanical ventilation systems shall provide at least 1 cfm of exhaust air for each ft^2 of floor area (0.3 $m^3/min/m^2$), but not less than 150 cfm (4 $m^3/min/m^2$). The mechanical ventilation system for dispensing areas shall be equipped with an airflow switch or other equally reliable method that is interlocked to sound an audible alarm upon failure of the ventilation system. [**30**:6.4.2.7.2]

66.4.4.3 General Storage Requirements.

66.4.4.3.1 The storage of any liquids shall not physically obstruct means of egress. [**30**:6.4.3.1]

66.4.4.3.2 Wood at least 1 in. (25 mm) nominal thickness shall be permitted to be used for shelving, racks, dunnage, scuffboards, floor overlay, and similar installations. [**30**:6.4.3.2]

66.4.4.3.3 Where storage on racks exists as permitted in this *Code*, a minimum 4 ft (1.2 m) wide aisle shall be provided between adjacent rack sections and any adjacent storage of liquids. Main aisles shall be a minimum of 8 ft (2.4 m) wide. [**30**:6.4.3.3]

66.4.4.3.4 Solid pile and palletized storage in liquid warehouses shall be arranged so that piles are separated from each other by at least 4 ft (1.2 m). Aisles shall be provided and arranged so that no container or portable tank is more than 20 ft (6 m) from an aisle. Main aisles shall be a minimum of 8 ft (2.4 m) wide.

*Exception: For Class IIIB liquids in containers, the distance between piles shall be permitted to be reduced from 4 ft (1.2 m) to 2 ft (0.6 m) in proportion to commensurate reductions in maximum quantity per pile and maximum storage height, as given in Table 66.4.4.4.1. [**30**:6.4.3.4]*

66.4.4.3.5 Class I liquids shall not be permitted in basement areas. Class II and Class IIIA liquids shall be permitted to be stored in basements provided that automatic sprinkler protection and other fire protection facilities are provided in accordance with Section 6.8 of NFPA 30. [**30**:6.4.3.5]

66.4.4.3.6 Limited quantities of combustible commodities, as defined in this *Code*, shall be permitted to be stored in liquid storage areas if the ordinary combustibles, other than those used for packaging the liquids, are separated from the liquids in storage by a minimum of 8 ft (2.4 m) horizontally, either by aisles or by open racks, and if protection is provided in accordance with Section 6.8 of NFPA 30. [**30**:6.4.3.6]

66.4.4.3.7 Storage of empty or idle combustible pallets inside an unprotected liquid storage area shall be limited to a maximum pile size of 2500 ft^2 (230 m^2) and to a maximum storage height of 6 ft (1.8 m). Storage of empty or idle combustible pallets inside a protected liquid storage area shall comply with this *Code*. Pallet storage shall be separated from liquid storage by aisles that are at least 8 ft (2.4 m) wide. [**30**:6.4.3.7]

66.4.4.3.8 Containers in piles shall be stacked in such a manner as to provide stability and to prevent excessive stress on container walls. Portable tanks stored over one tier high shall be designed to nest securely, without dunnage. Materials handling equipment shall be suitable to handle containers and tanks safely at the upper tier level. [**30**:6.4.3.8]

66.4.4.3.9 Containers or portable tanks in unprotected liquid storage areas shall not be stored closer than 36 in. (914 mm) to the nearest beam, chord, girder, or other roof member. [**30**:6.4.3.9]

Table 66.4.4.4.1 Indoor Unprotected Storage of Liquids in Containers, Portable Tanks, and Intermediate Bulk Containers

	Container Storage			Portable Tank/Metallic IBC Storage			Rigid Plastic and Composite IBCs		
Class	Maximum Pile Height (ft)	Maximum Quantity per Pile (gal)	Maximum Total Quantity (gal)*	Pile Maximum Height (ft)	Maximum Quantity per Pile (gal)	Maximum Total Quantity (gal)*	Maximum Pile Height (ft)	Maximum Quantity per Pile (gal)	Maximum Total Quantity (gal)*
IA	5	660	660	—	NP	—	—	—	—
IB	5	1,375	1,375	7	2,000	2,000	—	—	—
IC	5	2,750	2,750	7	4,000	4,000	—	—	—
II	10	4,125	8,250	7	5,500	11,000	7	4,125	8,250
IIIA	15	13,750	27,500	7	22,000	44,000	7	13,750	27,500
IIIB	15	13,750	55,000	7	22,000	88,000	7	13,750	55,000

Notes:
(1) For SI units, 1 ft = 0.3 m; 1 gal = 3.8 L.
(2) NP — Not permitted.
*Applies only to cut-off rooms and attached buildings, not to liquid warehouses.
[30:Table 6.4.4.1]

66.4.4.4 Allowable Quantities and Storage Heights.

66.4.4.4.1* Except as provided for in 6.4.3.4 and in 6.4.4.2 through 6.4.4.4 of NFPA 30 indoor unprotected liquid storage shall comply with Table 66.4.4.4.1. Where storage of liquids is protected as defined in 6.1.3.2 of NFPA 30 the protection shall meet the requirements of Section 6.8 of NFPA 30.

Exception: Other quantities and arrangements of storage shall be permitted to be used where the storage is suitably protected and approved by the AHJ. [30:6.4.4.1]

66.4.4.4.2 Storage in inside rooms shall meet the requirements specified in Table 66.4.4.4.2. In addition, containers over 30 gal (114 L) capacity that contain Class I or Class II liquids shall not be stored more than one container high in inside rooms.

Exception: This requirement shall not apply to inside rooms and hazardous materials storage lockers that are located in a liquid warehouse and are provided with equal or greater fire protection as is provided for the warehouse itself. [30:6.4.4.2]

Table 66.4.4.4.2 Storage Limitations for Inside Rooms

Total Floor Area (ft^2)	Automatic Fire Protection Provided?[a]	Total Allowable Quantity (gal/ft^2 of floor area)
<150	No	2
	Yes	5
>150 and ≤500	No	4[b]
	Yes	10

Note: For SI units, 1 ft^2 = 0.09 m^2; 1 gal = 3.8 L.
[a] The fire protection system shall be automatic sprinklers, water spray, carbon dioxide, dry chemical, or other approved system. *(See 66.4.8.)*
[b] Total allowable quantities of Class IA and IB liquids shall not exceed the quantities permitted in Table 66.4.4.4.1 or those permitted by 66.4.4.4.4.
[30:Table 6.4.4.2]

66.4.4.4.3 Unprotected storage of liquids in racks shall not exceed the maximum total quantities allowed by Table 66.4.4.4.1.

Exception: Liquid warehouses do not need to comply with this requirement. [30:6.4.4.3]

66.4.4.4.4 The total quantity of liquids stored in a liquid warehouse shall not be restricted. However, the storage heights and maximum quantity per pile or rack section for unprotected storage shall comply with Table 66.4.4.4.1.

Exception: An unprotected liquid warehouse that is located a minimum of 100 ft (30 m) from exposed buildings or any property line that is or can be built upon does not need to comply with 6.4.3.9 of NFPA 30 and Table 66.4.4.4.1 if there is protection for exposures. Where protection for exposures is not provided, this minimum distance shall be increased to 200 ft (60 m). [30:6.4.4.4]

66.4.4.4.5 Where two or more classes of liquids are stored in a single pile or rack section, the maximum total quantity and the maximum storage height permitted in that pile or rack section shall be the smallest of the individual maximum total quantities and maximum storage heights for the specific classes present, respectively. The maximum total quantity permitted shall be limited to a sum of the proportional amounts that each class of liquid present bears to the maximum total quantity permitted for its respective class. The sum of the proportional amounts shall not exceed 100 percent.

Exception: The maximum total quantities in liquid warehouses shall not be restricted. (See also 66.4.4.4.3.) [30:6.4.4.5]

66.4.4.5 Operations.

66.4.4.5.1 Dispensing of Class I liquids or Class II or Class III liquids at temperatures at or above their flash points shall not be permitted in cutoff rooms or attached buildings that exceed 1000 ft^2 (93 m^2) in floor area or in liquid warehouses unless the dispensing area is suitably cut off from the storage areas in accordance with Table 66.4.4.2.1 and meets all other requirements of 6.4.2 of NFPA 30. [30:6.4.5.1]

66.4.4.5.2 Dispensing operations shall comply with the applicable requirements of Chapter 7 of NFPA 30. [30:6.4.5.2]

66.4.5 Requirements for Liquid Storage Areas in Other Occupancies.

66.4.5.1 Scope. Subsection 66.4.5 shall apply to areas where the storage of liquids is incidental and not the primary purpose of the area.

Exception: See Chapter 7 of NFPA 30 for incidental storage of liquids used in processing, blending, and packaging areas, including areas where liquids in containers are staged after filling and prior to further use, warehousing, or shipment. [30:6.5.1]

66.4.5.1.1 Where inside liquid storage areas are required in other occupancies, they shall meet all applicable requirements of 66.4.4 and all applicable requirements of 66.4.5. Where other factors substantially increase or decrease the hazard, the AHJ shall be permitted to modify the quantities specified. [**30:**6.5.1.1]

66.4.5.1.2 Storage of liquids shall not physically obstruct a means of egress. Class I liquids shall be placed so that a fire in the liquid storage area would not prevent egress from the area. [**30:**6.5.1.2]

66.4.5.1.3 Liquids used for building maintenance, painting, or other similar infrequent maintenance purposes shall be permitted to be stored temporarily in closed containers outside of storage cabinets or inside liquid storage areas, if limited to an amount that does not exceed a 10-day supply at anticipated rates of use. [**30:**6.5.1.3]

66.4.5.1.4 Class I liquids shall not be stored in basements. [**30:**6.5.1.4]

66.4.5.2 General-Purpose Warehouses.

66.4.5.2.1 General. General-purpose warehouses, as defined in 3.3.249.1, that store liquids shall be separate, detached buildings or shall be separated from other occupancies by a 4-hour fire wall as defined in NFPA 221 or, if approved, by a fire partition having a fire resistance rating of not less than 2 hours. Each opening shall be protected as provided for in 6.4.2.2 of NFPA 30. [**30:**6.5.2.1]

66.4.5.2.2 Operations Involving Storage of Liquids. Warehousing operations that involve storage of liquids shall be restricted to inside liquid storage areas in accordance with Section 6.4 of NFPA 30.

Exception: As provided for in 66.4.5.2.3. [30:6.5.2.2]

66.4.5.2.3 Basic Requirements. Class IB and IC liquids in containers of 1.3 gal (5 L) or less capacity, Class II liquids in containers of 5.3 gal (20 L) or less capacity, and Class III liquids in containers of 60 gal (230 L) or less capacity shall be permitted to be stored in warehouses that handle combustible commodities, as defined in NFPA 13, provided that the storage area is protected with automatic sprinklers in accordance with the provisions of NFPA 13 for 20 ft (6 m) high storage of Class IV commodities and the quantities and height of liquid storage are limited to the following:

(1) Class IA liquids: not permitted
(2) Class IB and IC liquids: 660 gal (2500 L), maximum 5 ft (1.5 m) high pile stored on floor, with no rack or other storage above
(3) Class II liquid: 1375 gal (5200 L), maximum 5 ft (1.5 m) high pile stored on floor, with no rack or other storage above
(4) Class IIIA liquid: 2750 gal (10,400 L), maximum 10 ft (3 m) high pile stored on floor, with no rack or other storage above or in storage racks to a maximum height of 10 ft (3 m)
(5) Class IIIB liquid: 13,750 gal (52,000 L), maximum 15 ft (4.6 m) high pile stored on floor, with no rack or other storage above or in storage racks to a maximum height of 15 ft (4.6 m) [**30:**6.5.2.3]

66.4.5.2.3.1 The liquid storage shall also comply with 66.4.5.2.3 through 66.4.5.2.9. [**30:**6.5.2.3.1]

66.4.5.2.4* Liquids in Plastic Containers. Class I and Class II liquids in plastic containers shall not be stored in general-purpose warehouses but shall be stored in inside liquid storage areas that meet the requirements of Section 6.4 of NFPA 30.

Exception No. 1: The following liquids, packaged in plastic containers, shall be permitted to be stored in general-purpose warehouses in accordance with the protection and storage limitations specified in 66.4.5.2 as follows:

(1) Products containing not more than 50 percent by volume of water-miscible liquids, with the remainder of the solution not being a Class I liquid, where packaged in individual containers
(2) Products containing more than 50 percent water-miscible liquids in individual containers not exceeding 16 oz (0.5 L) capacity in cartons

Exception No. 2: Class I and Class II liquids in plastic containers shall be permitted to be stored in a general-purpose warehouse if the packaging systems are listed and labeled for use with these materials. All other provisions of 66.4.5.2 shall also apply. [30:6.5.2.4]

66.4.5.2.5 Palletized, Solid Pile, or Rack Storage. Liquids in containers shall be permitted to be stored on pallets, in solid piles, or on racks, subject to the maximum total quantity and maximum storage height provisions of 66.4.5.2.3. [**30:**6.5.2.5]

66.4.5.2.6 Basement Storage Areas. Storage of liquids in basement areas of general-purpose warehouses shall only be permitted as provided for in 6.4.3.5 of NFPA 30. [**30:**6.5.2.6]

66.4.5.2.7 Mixed Liquid Storage. Where two or more classes of liquids are stored in a single pile or single rack section, the maximum total quantity and maximum storage height permitted shall be as provided for in 6.4.4.5 of NFPA 30. [**30:**6.5.2.7]

66.4.5.2.8 Separation and Aisles. Storage of liquids in general-purpose warehouses shall be arranged as provided for in 6.4.3.3 and 6.4.3.4 of NFPA 30. [**30:**6.5.2.8]

66.4.5.2.9 Liquids and Ordinary Combustible Storage. The following shall apply to the storage of liquids and ordinary combustible commodities:

(1) Liquids shall not be stored in the same pile or in the same rack sections as ordinary combustible commodities. *[See 66.4.5.2.9(2).]* Where liquids are packaged together with ordinary combustibles, as in kits, the storage shall be considered on the basis of whichever commodity predominates.
(2) Except as provided for in 66.4.5.2.9(1), ordinary combustible commodities shall be separated from liquids in containers by a minimum distance of 8 ft (2.4 m). [**30:**6.5.2.9]

66.4.5.2.10 Operations. Dispensing of Class I and Class II liquids in general-purpose warehouses shall not be permitted unless the dispensing area is suitably cut off from other ordinary combustible or liquid storage areas, as specified in 6.4.2, and otherwise complies with the applicable provisions of 6.4.2 of NFPA 30. [**30:**6.5.2.10]

66.4.5.3 Dwellings and Residential Buildings Containing Not More than Three Dwelling Units and Accompanying Attached and Detached Garages. Storage in excess of 25 gal (95 L) of Class I and Class II liquids combined shall be prohibited. In addition, storage in excess of 60 gal (230 L) of Class IIIA liquid shall be prohibited. [30:6.5.3]

66.4.5.4 Assembly Occupancies, Buildings Containing More than Three Dwelling Units, and Hotels. Storage in excess of 10 gal (38 L) of Class I and Class II liquids combined or 60 gal (230 L) of Class IIIA liquids shall be in containers stored in storage cabinets, in safety cans, or in an inside storage area that does not have openings that communicate with that portion of the building used by the public. [30:6.5.4]

66.4.5.5 Office, Educational, and Institutional Occupancies, and Day Care Centers. The requirements of 66.4.5.5.1 through of 66.4.5.5.5 shall apply to office, educational, and institutional occupancies and day care centers. [30:6.5.5]

66.4.5.5.1 Storage shall be limited to that required for operation of office equipment, maintenance, demonstration, and laboratory work. This storage shall comply with the provisions of 66.4.5.5.2 through 66.4.5.5.5, except that the storage for industrial and educational laboratory work shall comply with NFPA 45. [30:6.5.5.1]

66.4.5.5.2 Containers of Class I liquids that are stored outside of an inside liquid storage area shall not exceed a capacity of 1.3 gal (5 L).

Exception: Safety cans shall be permitted up to a 2.6 gal (10 L) capacity. [30:6.5.5.2]

66.4.5.5.3 The combined volume of Class I and Class II liquids stored in a single fire area outside of a storage cabinet or an inside liquid storage area not stored in safety cans shall not exceed 10 gal (38 L). [30:6.5.5.3]

66.4.5.5.4 The combined volume of Class I and Class II liquids stored in a single fire area in safety cans outside of an inside liquid storage area or storage cabinet shall not exceed 25 gal (95 L). [30:6.5.5.4]

66.4.5.5.5 The volume of Class IIIA liquids stored outside of an inside liquid storage area or storage cabinet shall not exceed 60 gal (230 L). [30:6.5.5.5]

66.4.5.6 Mercantile Occupancies.

66.4.5.6.1 Paragraph 66.4.5.6 shall apply to mercantile occupancies that handle, store, and display liquids, as defined in this *Code*. [30:6.5.6.1]

66.4.5.6.2 The display arrangement, storage arrangement, and maximum total quantity of liquids allowed shall meet the requirements of 66.4.5.6 and Table 66.4.5.6.2. [30:6.5.6.2]

66.4.5.6.3 On floors above the ground level, the storage or display of Class I and Class II liquids shall be limited to 60 gal (230 L) in unprotected occupancies and 120 gal (454 L) in protected occupancies. [30:6.5.6.3]

66.4.5.6.4 Class I and Class II liquids shall not be permitted to be stored or displayed in basements. [30:6.5.6.4]

66.4.5.6.5 Liquids in containers of greater than 5.3 gal (20 L) capacity shall not be stored or displayed in areas that are accessible to the public.

Exception: This shall not apply to any liquid that is exempt from the requirements of Section 66.4, as set forth in 66.4.1.1.2. [30:6.5.6.5]

Table 66.4.5.6.2 Allowable Storage and Display Amounts for Mercantile Occupancies

Level of Protection	Storage Limits	Liquid Classification: IA[a]	Liquid Classification: IB, IC, II, and IIIA (Any Combination)	Liquid Classification: IIIB
Unprotected	Maximum quantity allowed[c]	60 gal (227 L)	3750 gal (14,200 L) per building area; a maximum of two areas permitted per occupancy when separation is provided by a minimum 1-hour-rated fire separation wall	15,000 gal (56,800 L)
	Maximum storage density		2 gal/ft^2 (7.5 L/m^2) in storage or display areas and adjacent aisles	
NFPA 13, Ordinary Hazard (Group 2) Sprinkler System[b]	Maximum quantity allowed[c]	120 gal (454 L)	7500 gal (28,400 L) per building area; a maximum of two areas permitted per occupancy when separation is provided by a minimum 1-hour-rated fire separation wall	Unlimited
	Maximum storage density		4 gal/ft^2 (15 L/m^2) in storage or display areas and adjacent aisles	
NFPA 30, Section 6.8	Maximum quantity allowed[c]	120 gal (454 L)	30,000 gal (113,600 L) per occupancy	Unlimited

Notes:
(1) For SI units, 1 gal = 3.8 L; 1 ft^2 = 0.09 m^2.
(2) Existing unprotected mercantile occupancies in operation prior to January 1, 1997, are permitted to store or display up to 7500 gal (28,400 L) of Class IB, IC, II, and IIIA liquids (any combination) in each area.
[a]Ground level floor only.
[b]For storage heights that do not exceed 12 ft (3.6 m).
[c]Does not include liquids exempted by 66.4.1.1.1.
[30:Table 6.5.6.2]

66.4.5.6.6 Class II liquids that are not water-miscible and are packaged in plastic containers of 1 gal (3.8 L) capacity or greater shall be limited to a maximum total quantity of 30 gal (114 L) per pile. Adjacent piles shall be separated by a minimum distance of 50 ft (15 m). This maximum total quantity shall be permitted to be doubled to 60 gal (230 L), if the liquids are stored in listed flammable liquids storage cabinets or are in areas protected by an automatic sprinkler system having a design density of 0.60 gpm per ft^2 over 2500 ft^2 (24.4 mm/min over 230 m^2) and using high temperature, extra-large orifice quick-response sprinklers. [**30:**6.5.6.6]

66.4.5.6.7 Protection systems for storage and display of liquids that are designed and developed based on full-scale fire tests performed at an approved test facility shall be considered an acceptable alternative to the protection criteria set forth in Section 6.8 of NFPA 30. Such alternative protection systems shall be approved by the AHJ. [**30:**6.5.6.7]

66.4.5.6.8 Means of egress from mercantile occupancies shall meet applicable requirements of NFPA *101*. [**30:**6.5.6.8]

66.4.5.6.9 Power-operated industrial trucks used to move Class I liquids shall be selected, operated, and maintained in accordance with NFPA 505, *Fire Safety Standard for Powered Industrial Trucks Including Type Designations, Areas of Use, Conversions, Maintenance, and Operations.* [**30:**6.5.6.9]

66.4.6* Hazardous Materials Storage Lockers.

66.4.6.1 Hazardous materials storage lockers that are used as inside rooms shall be considered inside liquid storage rooms and shall meet the requirements for inside rooms as set forth in Section 6.4 of NFPA 30 as applicable. [**30:**6.6.1]

66.4.6.2 Subsections 6.6.3 and 6.6.4 of NFPA 30 shall apply to storage of flammable and combustible liquids in containers, in hazardous materials storage lockers (hereinafter referred to as lockers) that are located outside. [**30:**6.6.2]

66.4.6.3 The design and construction of a locker shall meet all applicable local, state, and federal regulations and requirements and shall be subject to the approval of the AHJ. Movable prefabricated structures that have been examined, listed, or labeled by an organization acceptable to the AHJ for use as a hazardous materials storage facility shall be acceptable. [**30:**6.6.3]

66.4.6.3.1 Lockers governed by Section 6.6 of NFPA 30 shall not exceed 1500 ft^2 (140 m^2) gross floor area. Vertical stacking of lockers shall not be permitted. [**30:**6.6.3.1]

66.4.6.3.2 Where electrical wiring and equipment is required, it shall comply with 6.4.2.6 of NFPA 30. [**30:**6.6.3.2]

66.4.6.3.3 Where dispensing or filling is permitted inside a locker, operations shall comply with the provisions of Chapter 7 of NFPA 30. [**30:**6.6.3.3]

66.4.6.3.4 Ventilation shall be provided in accordance with 6.4.2.7 of NFPA 30. [**30:**6.6.3.4]

66.4.6.3.5 Lockers shall include a spill containment system to prevent the flow of liquids from the structure under emergency conditions. The containment system shall have sufficient capacity to contain 10 percent of the volume of containers allowed or the volume of the largest container, whichever is greater. [**30:**6.6.3.5]

66.4.6.4 Designated sites shall be provided for the location and use of lockers and shall be subject to the approval of the AHJ. The designated sites shall be arranged to provide at least the minimum separation distance between individual lockers, distance from locker to property line that is or can be built upon, and distance from locker to nearest side of public ways or to important buildings on the same property, as given in Table 66.4.6.4 and explanatory notes 1, 2, 3, and 4, as applicable. [**30:**6.6.4]

66.4.6.4.1 Once the designated site is approved, it shall not be changed without the approval of the AHJ. [**30:**6.6.4.1]

66.4.6.4.2 More than one locker shall be permitted on a designated site, provided that the separation distance between individual lockers is maintained in accordance with Table 66.4.6.4. [**30:**6.6.4.2]

66.4.6.4.3 Where the approved designated storage site is accessible to the general public, it shall be protected from tampering or trespassing. [**30:**6.6.4.3]

66.4.6.4.4 Storage Practices.

66.4.6.4.4.1 Containers of liquid in their original shipping packages shall be permitted to be stored either palletized or solid piled. Unpackaged containers shall be permitted to be stored on shelves or directly on the floor of the locker. Containers over 30 gal (114 L) capacity storing Class I or Class II liquids shall not be stored in arrangements more than two containers high. In all cases, the storage arrangement shall provide unrestricted access to and egress from the locker. [**30:**6.6.4.4.1]

66.4.6.4.4.2 No other flammable or combustible materials storage shall be permitted within the designated site approved for lockers. [**30:**6.6.4.4.2]

66.4.6.4.4.3 Placarding or warning signs for lockers shall be in accordance with applicable local, state, and federal regulations or with NFPA 704. [**30:**6.6.4.4.3]

66.4.7 Outdoor Storage.

66.4.7.1 Outdoor storage of liquids in containers, intermediate bulk containers, and portable tanks shall be in accordance with Table 66.4.7.1, 6.7.1.1 through 6.7.1.4, and 6.7.2 through 6.7.4 of NFPA 30. [**30:**6.7.1]

66.4.7.1.1 Where two or more classes of materials are stored in a single pile, the maximum gallonage in that pile shall be the smallest of the two or more separate gallonages. [**30:**6.7.1.1]

66.4.7.1.2 No container, intermediate bulk container, or portable tank in a pile shall be more than 200 ft (60 m) from a minimum 20 ft (6 m) wide accessway to permit approach of fire control apparatus under all weather conditions. [**30:**6.7.1.2]

66.4.7.1.3 The distances listed in Table 66.4.7.1 shall apply to properties that have protection for exposures as defined. If there are exposures, and such protection for exposures does not exist, the distance to property line that is or can be built upon shall be doubled. [**30:**6.7.1.3]

66.4.7.1.4 Where total quantity stored does not exceed 50 percent of the maximum per pile given in Table 66.4.7.1, the distances to a property line that is or can be built upon and to streets, alleys, or public ways shall be permitted to be reduced by 50 percent but not to less than 3 ft (0.9 m). [**30:**6.7.1.4]

66.4.7.2 A maximum of 1100 gal (4160 L) of liquids in closed containers, intermediate bulk containers, and portable tanks shall be permitted to be stored adjacent to a building under the same management provided the following conditions apply:

Table 66.4.6.4 Designated Sites

Area of Designated Site[a] (ft^2)	Minimum Separation Distance (ft)		
	Between Individual Lockers	From Locker to Property Line that Is or Can Be Built Upon[b]	From Locker to Nearest Side of Public Ways or to Important Buildings on Same Property[b,c]
≤100	5	10	5
>100 and ≤500	5	20	10
>500 and ≤1500[d]	5	30	20

Notes:
(1) For SI units, 1 ft = 0.3 m; 1 ft^2 = 0.09 m^2.
(2) If the locker is provided with a fire resistance rating of not less than 4 hours and deflagration venting is not required in accordance with 6.4.2.4 of NFPA 30, all distances required by Table 66.4.6.4 shall be permitted to be waived.
[a]Site area limits are intended to differentiate the relative size and thus the number of lockers that are permitted in one designated site.
[b]Distances apply to properties that have protection for exposures, as defined. If there are exposures and such protection for exposures does not exist, the distances shall be doubled.
[c]When the exposed building has an exterior wall, facing the designated site, that has a fire resistance rating of at least 2 hours and has no openings to abovegrade areas within 10 ft (3 m) horizontally and no openings to belowgrade areas within 50 ft (15 m) horizontally of the designated area, the distances can be reduced to half of those shown in the table, except they shall never be less than 5 ft (1.5 m).
[d]When a single locker has a gross single story floor area that will require a site area limit of greater than 1500 ft^2 (140 m^2) or when multiple units exceed the area limit of 1500 ft^2 (140 m^2), the AHJ shall be consulted for approval of distances.
[**30**:Table 6.6.4]

Table 66.4.7.1 Outdoor Liquid Storage in Containers and Portable Tanks

Class	Maximum Capacity and Height of a Pile						Minimum Separation Distance (ft)		
	Containers		Rigid Plastic and Composite IBCs		Portable Tanks and Metal IBCs		Between Piles or Racks	To Property Line that Is or Can Be Built Upon[c,e]	To Street, Alley, or a Public Way[c]
	Capacity (gal)[b,c,d]	Height (ft)	Capacity (gal)	Height (ft)	Capacity (gal)[b,d]	Height (ft)			
IA	1,100	10	—	—	2,200	7	5	50	10
IB	2,200	12	—	—	4,400	14	5	50	10
IC	4,400	12	—	—	8,800	14	5	50	10
II	8,800	12	8,800	12	17,600	14	5	25	5
III	22,000	18	22,000	18	44,000	14	5	10	5

Note: For SI units, 1 ft = 0.3 m; 1 gal = 3.8 L.
[a]Storage of Class I liquids in rigid plastic and composite IBCs not permitted.
[b]See 66.4.7.1.1 regarding mixed-class storage.
[c]See 66.4.7.1.4 for smaller pile sizes.
[d]For storage in racks, the quantity limits per pile do not apply, but the rack arrangements shall be limited to a maximum of 50 ft (15 m) in length and two rows or 9 ft (2.7 m) in depth.
[e]See 66.4.7.1.3, regarding protection for exposures.
[**30**:Table 6.7.1]

(1) The adjacent building wall has an exterior fire resistance rating of 2 hours.
(2) There are no openings to areas at grade or above grade that are within 10 ft (3 m) horizontally of the storage.
(3) There are no openings directly above the storage.
(4) There are no openings to areas below grade within 50 ft (15 m) horizontally of the storage.

Exception: The provisions in 66.4.7.2(1) through 66.4.7.2(4) are not necessary if the building in question is limited to one story, is of fire-resistive or noncombustible construction, is devoted principally to the storage of liquids, and is acceptable to the AHJ. [30:6.7.2]

66.4.7.2.1 The quantity of liquids stored adjacent to a building protected in accordance with 66.4.7.2 shall be permitted to exceed that permitted in 66.4.7.2, provided the maximum quantity per pile does not exceed 1100 gal (4160 L) and each pile is separated by a 10 ft (3 m) minimum clear space along the common wall. [**30**:6.7.2.1]

66.4.7.2.2 Where the quantity stored exceeds the 1100 gal (4160 L) permitted adjacent to the building given in 66.4.7.2, or the provisions of 66.4.7.2 cannot otherwise be met, a minimum distance equal to that shown in Table 66.4.7.1 for distance to property line shall be maintained between buildings and the nearest container or portable tank. [**30:**6.7.2.2]

66.4.7.3 The storage area shall be graded in a manner to divert possible spills away from buildings or other exposures or shall be surrounded by a curb at least 6 in. (150 mm) high. Where curbs are used, provisions shall be made for draining of accumulations of groundwater or rainwater or spills of liquids. Drains shall terminate at a safe location and shall be accessible to operation under fire conditions. [**30:**6.7.3]

66.4.7.4 The storage area shall be protected against tampering or trespassers where necessary and shall be kept free of weeds, debris, and other combustible materials not necessary to the storage. [**30:**6.7.4]

66.4.7.5 Outdoor storage of containers that are protected from the weather by a canopy or roof that does not limit the dissipation of heat or dispersion of flammable vapors and does not restrict fire-fighting access and control shall be treated as outside storage in accordance with 66.4.7 and shall not be considered an inside storage area subject to the requirements of Section 6.4 of NFPA 30. [**30:**6.7.5]

66.4.8* Automatic Fire Protection for Inside Storage.

66.4.8.1 Scope. Subsection 66.4.8 shall apply to all storage of liquids in containers and portable tanks as specified in Section 6.2 through Section 6.5 of NFPA 30. [**30:**6.8.1]

66.4.8.1.1 Where different classes of liquids and container types are stored in the same protected area, protection shall meet the requirements of 66.4.8 for the most severe hazard class present. [**30:**6.8.1.1]

66.4.8.1.2 Where storage is on racks as permitted by this *Code*, racks storing Class I, Class II, or Class IIIA liquids shall be either single row or double row, as described in this *Code*. Unless otherwise specified by 66.4.8, single-row racks shall be not more than 4.5 ft (1.4 m) wide and double-row racks shall be not more than 9 ft (2.8 m) wide. [**30:**6.8.1.2]

66.4.8.1.3* For the purpose of 66.4.8, a relieving-style container shall mean a metal container, a metal intermediate bulk container, or a metal portable tank that is equipped with at least one pressure-relieving mechanism at its top that is designed, sized, and arranged to relieve the internal pressure generated due to exposure to fire so that violent rupture is prevented. [**30:**6.8.1.3]

66.4.8.1.3.1 The pressure-relieving mechanism for containers shall be listed and labeled in accordance with Factory Mutual Research Corporation Class 6083, *Examination Program for Fusible Closures for Steel Drums*, or equivalent. The pressure-relieving mechanism shall not be painted. Cap seals, if used, shall be made of thermoplastic material. [**30:**6.8.1.3.1]

66.4.8.1.3.2 For metal containers greater than 6 gal (23 L) capacity, the pressure-relieving mechanism shall be unobstructed or an additional pressure-relieving mechanism shall be provided. [**30:**6.8.1.3.2]

66.4.8.1.4 For new fire protection systems installed after January 1, 1997, fire protection systems shall meet the requirements of Section 6.8 of NFPA 30. [**30:**6.8.1.4]

66.4.8.1.5 When applying the fire protection criteria of 66.4.8, a minimum aisle space of 6 ft (1.8 m) shall be provided between adjacent piles or adjacent rack stations, unless otherwise specified in the tables in 66.4.8.2. [**30:**6.8.1.5]

66.4.8.1.6* For the purposes of 66.4.8, any liquid that gels, thickens, or solidifies when heated; or whose viscosity at room temperature versus weight percent content of Class I, Class II, or Class III liquids is in the shaded portion of Figure 66.4.8.1.6 shall be permitted to be protected using either the criteria for a Class IIIB liquid in accordance with Figure 66.4.8.2(a) or Figure 66.4.8.2(b) or the criteria for Group A plastics in accordance with Figure 66.4.8.2(b), whichever is applicable. [**30:**6.8.1.6]

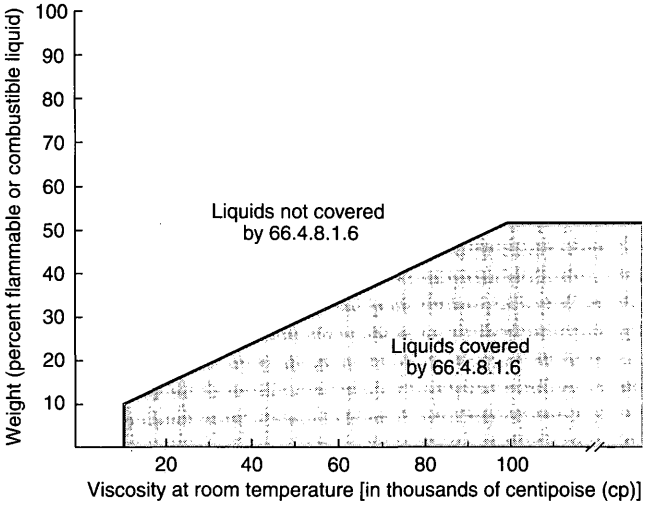

FIGURE 66.4.8.1.6 Viscosity Versus Weight Percent Flammable or Combustible Component. [30:Figure 6.8.1.6]

66.4.8.1.7* For the purposes of 66.4.8, an unsaturated polyester resin (UPR) shall mean any such resin that contains up to 50 percent by weight of Class IC, Class II, or Class IIIA liquid, but no Class IA or Class IB liquid. [**30:**6.8.1.7]

66.4.8.2* Automatic Sprinkler and Foam-Water Fire Protection Systems. Where automatic sprinklers or low-expansion foam-water sprinkler systems are used, the protection criteria of Table 66.4.8.2(a) through Table 66.4.8.2(k) shall be followed for the applicable liquid class, container type, and storage arrangement. Figure 66.4.8.2(a), Figure 66.4.8.2(b), and Figure 66.4.8.2(c) shall be used to specify protection criteria for liquid classes, container types, and storage arrangements not specifically covered in Table 66.4.8.2(a) through Table 66.4.8.2(k). All automatic sprinkler and foam-water fire protection systems shall be wet pipe, deluge, or preaction systems. If preaction systems are used, they shall be designed so that water or foam solution will immediately discharge from the sprinkler upon sprinkler actuation. Foam-water sprinkler systems that meet the design criteria specified in the water sprinkler tables in 66.4.8.2 shall be acceptable.

Exception No. 1: Except as otherwise permitted in Section 6.2 through Section 6.7 of NFPA 30.

Exception No. 2: Table 66.4.8.2(a) through Table 66.4.8.2(j) shall not apply to unstable liquids. [30:6.8.2]

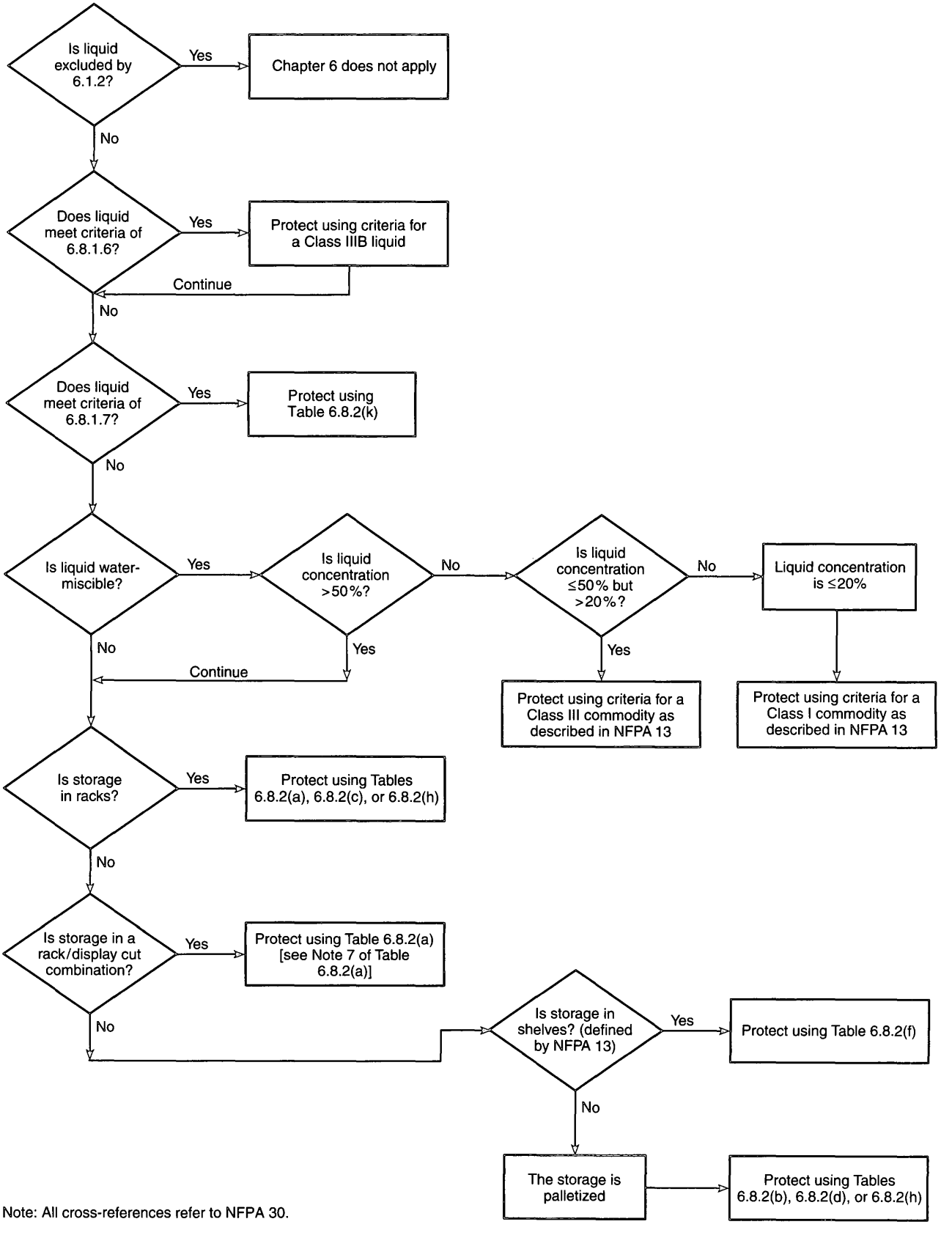

Note: All cross-references refer to NFPA 30.

FIGURE 66.4.8.2(a) Fire Protection Criteria Decision Tree for Flammable and Combustible Liquids in Metal Containers. [30:Figure 6.8.2(a)]

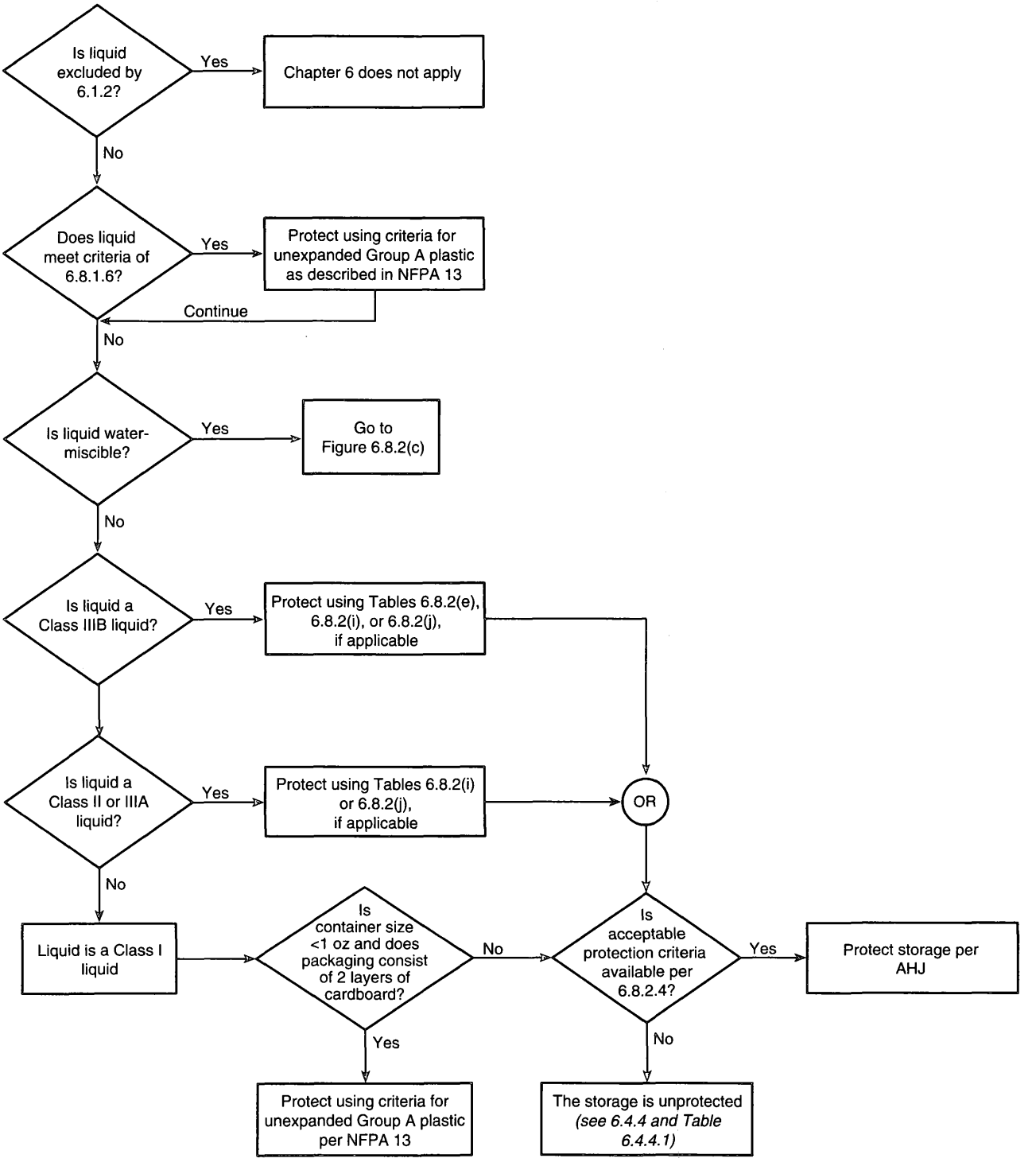

Note: All cross-references refer to NFPA 30.

FIGURE 66.4.8.2(b) Fire Protection Criteria Decision Tree for Flammable and Combustible Liquids in Glass, Plastic, or Fiberboard Containers. [30:Figure 6.8.2(b)]

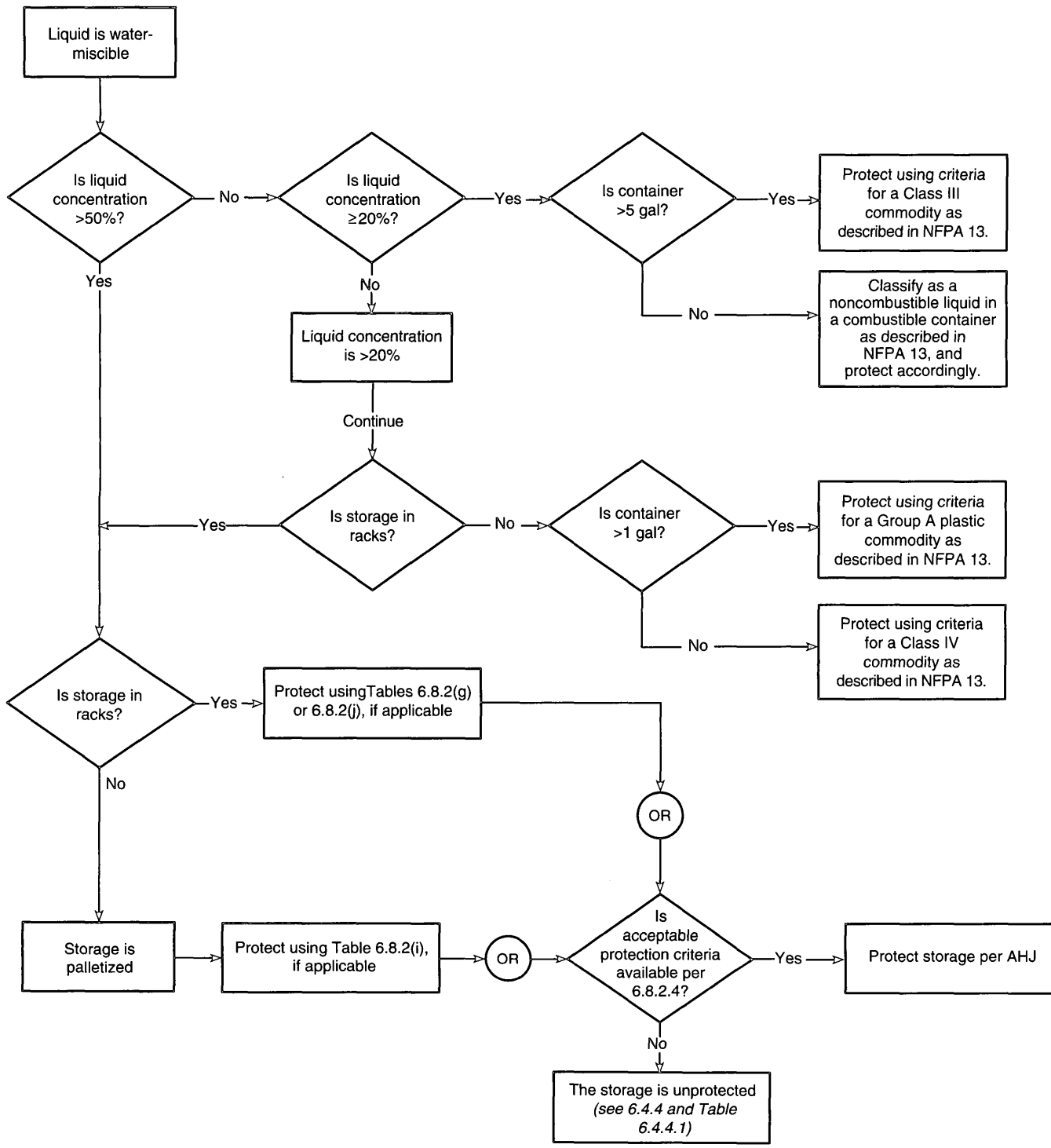

Note: All cross-references refer to NFPA 30.
For SI units, 1 gal = 3.8 L.

FIGURE 66.4.8.2(c) Fire Protection Criteria Decision Tree for Water-Miscible Flammable and Combustible Liquids in Glass, Plastic, or Fiberboard Containers. [30:Figure 6.8.2(c)]

Table 66.4.8.2(a) Water Sprinkler Protection for Single- or Double-Row Rack Storage of Metal Containers, Portable Tanks, and Intermediate Bulk Containers (for Nonmiscible Liquids or Miscible Liquids with Flammable Liquid Concentration >50% by Volume)

Liquid Class	Container Size (gal)	Maximum Storage Height (ft)	Maximum Ceiling Height (ft)	Ceiling Sprinkler Type: Nominal K-Factor[a]	Ceiling Sprinkler Type: Response[a]	Ceiling Density (gpm/ft²)	Ceiling Design Area (ft²)[b]	In-Rack Sprinkler Protection	Notes	Fire Test Ref.[c]
Nonrelieving-Style Container										
IB, IC, II, or III	≤1	16	30	≥11.2	QR	0.60	2000	One line 8 ft above floor	3, 6	1
	≤1	20	30	≥11.2	SR or QR	0.60	2000	One line 6 ft above floor; one line 12 ft above floor	3, 6	2
IB, IC, II, or IIIA	≤5	25	30	≥8.0	SR or QR	0.30	3000	Every level	3	3
IIIB	≤5	40	50	≥8.0	SR or QR	0.30	2000	One line every other level, beginning above first storage level	3, 7	4
IB, IC, II, or IIIA	>5 and ≤60	25	30	≥11.2	SR	0.40	3000	Every level in the flue space. Face sprinklers at the first level at each upright	5	5
IIIB	>5 and ≤60	40	50	≥8.0	SR	0.30	3000	One line every other level, beginning above first storage level	3, 7	6
Relieving-Style Containers[d]										
IB, IC, II, or IIIA	≤5	14	18	≥11.2	QR	0.65	2000	None	2, 4	7
	≤5	25	30	≥8.0	SR or QR	0.30	3000	One line every other level, beginning above first storage level	3, 8	8
IIIB	≤5	40	50	≥8.0	SR or QR	0.30	2000	One line every other level, beginning above first storage level	3, 7	9
IB, IC, II, or IIIA	>5 and ≤60	25	30	≥11.2	SR	0.60	3000	One line every other level, in the flue space, beginning above first storage level Face sprinklers at the first level at each upright	3	10
IIIB	>5 and ≤60	40	50	≥8.0	SR	0.30	3000	One line every other level, beginning above first storage level	3, 7	11
IB, IC, II, or IIIA	Portable tanks, IBCs	25	30	≥11.2	SR	0.60	3000	Every level in the flue space Face sprinklers at the first level at each upright	5	12
IIIB	Portable tanks, IBCs	40	50	≥8.0	SR	0.30	3000	One line every other level, beginning above first storage level	5	13

Notes:
(1) For SI units, 1 gal = 3.8 L; 1 ft = 0.3 m; 1 ft² = 0.09 m²; 1 gpm/ft² = 40.7 L/min/m² = 40.7 mm/min.
(2) Double-row racks 6 ft (1.8 m) wide maximum.
(3) Space in-rack sprinklers on maximum 10 ft (3 m) centers, staggered vertically. Base design on 30 gpm per sprinkler, with six hydraulically most remote sprinklers operating in each of upper three levels, or eight hydraulically most remote sprinklers if only one level. In-rack sprinklers are K-5.6 or K-8.0, QR, ordinary temperature, with shields.
(4) Use pendent-style K-11.2 ceiling sprinklers.
(5) Space in-rack sprinklers on maximum 9 ft centers staggered vertically, 30 gpm (115 L/min) per sprinkler K-5.6 or K-8.0, QR or SR, with shield, ordinary temperature, six hydraulically most remote sprinklers each level (upper three levels) operating. Eight sprinklers operating, if only one level.
(6) Protection for uncartoned or case-cut nonsolid shelf display up to 6½ ft (2 m) and storage above in pallets on racking, shelf material, open wire mesh, or 2 in. × 6 in. (50 mm × 150 mm) wooden slats, spaced a minimum of 2 in. (50 mm) apart.
(7) A density of 0.60 gpm/ft² over 2000 ft² (24.4 mm/min over 186 m²) shall be used if more than one level of storage exists above the top level of in-rack sprinklers (K-8.0 or K-11.2 for ceiling sprinklers).
(8) A density of 0.60 gpm/ft² over 2000 ft² (24.4 mm/min over 186 m²) shall be used if more than one level of storage exists above the top level of in-rack sprinklers (K-8.0 or K-11.2 for ceiling sprinklers).
[a]SR = standard response and QR = quick response, where both are listed.
[b]High temperature ceiling sprinklers.
[c]See Table D.2(a) of NFPA 30 for references to fire tests on which the protection criteria given in this table are based.
[d]Both ¾ in. (20 mm) and 2 in. (50 mm) listed and labeled pressure-relieving mechanisms are required on containers greater than 6 gal (23 L) capacity.
[**30**:Table 6.8.2(a)]

Table 66.4.8.2(b) Water Sprinkler Protection for Bulk or Palletized Storage of Metal Containers, Intermediate Bulk Containers, and Portable Tanks (for Nonmiscible Liquids or Miscible Liquids with Flammable Liquid Concentration >50% by Volume)

				Ceiling					
				Sprinkler Type					
Liquid Class	Container Size (gal)	Maximum Storage Height (ft)	Maximum Ceiling Height (ft)	Nominal K-factor	Response[a]	Density (gpm/ft^2)	Design Area (ft^2)[b]	Notes	Fire Test Ref.[c]
				Nonrelieving-Style Container					
IB, IC, II, or IIIA	≤5	4	18	≥8.0	SR or QR	0.21	1500	2	1
	≤5	5	18	≥8.0	SR or QR	0.30	3000	—	2
	≤5	6½	30	≥11.2	QR	0.45	3000	—	3
	>5 and ≤60	5	18	≥11.2	SR	0.40	3000	—	4
IIIB	≤5	18	30	≥8.0	SR or QR	0.25	3000	—	5
	>5 and ≤60	10	20	≥8.0	SR	0.25	3000	—	6
		18	30	≥8.0	SR	0.35	3000	—	7
				Relieving-Style Containers[d]					
IB, IC, II, or IIIA	≤5	12	30	≥11.2	QR	0.60	3000	3, 4	8
	>5 and ≤60	5	30	≥11.2	SR	0.40	3000	—	9
	>5 and ≤60	6½	30	≥11.2	SR	0.60	3000	5	10
IIIB	≤5	18	30	≥8.0	SR or QR	0.25	3000	—	11
	>5 and ≤60	10	20	≥8.0	SR	0.25	3000	—	12
		18	30	≥8.0	SR	0.35	3000	—	13
IB, IC, II, or IIIA	Portable tanks, IBCs	1 high	30	≥8.0	SR	0.30	3000	—	14
		2 high	30	≥11.2	SR	0.60	3000	—	15
IIIB	Portable tanks, IBCs	1 high	30	≥8.0	SR	0.25	3000	—	16
		2 high	30	≥11.2	SR	0.50	3000	—	17

Notes:
(1) For SI units, 1 gal = 3.8 L; 1 ft = 0.3 m; 1 ft^2 = 0.09 m^2; 1 gpm/ft^2 = 40.7 L/min/m^2 = 40.7 mm/min.
(2) Minimum hose stream demand: 250 gpm for 2 hours.
(3) Sprinklers shall also be hydraulically calculated to provide a density of 0.80 gpm/ft^2 over 1000 ft^2 (32.6 mm/min over 93 m^2).
(4) Use pendent-style K-11.2 ceiling sprinklers.
(5) Drums placed on open slatted pallet, not nested, to allow pressure relief from drums on lower levels.
[a]SR = standard response and QR = quick response, where both are listed.
[b]High-temperature ceiling sprinklers.
[c]See Table D.2(b) of NFPA 30 for references to fire tests on which the protection criteria given in this table are based.
[d]Both ¾ in. (20 mm) and 2 in. (50 mm) listed and labeled pressure-relieving mechanisms are required on containers greater than 6 gal (23 L) capacity.
[**30**:Table 6.8.2(b)]

66.4.8.2.1 When foam or foam-water fire protection systems are provided, discharge densities shall be determined based on the listing criteria of the foam discharge devices selected, the foam concentrate, the specific liquids to be protected, and the criteria in Table 66.4.8.2(c) and Table 66.4.8.2(d). Where the discharge densities given in Table 66.4.8.2(c) and Table 66.4.8.2(d) differ from those in the listing criteria for the discharge devices, the greater of the two shall be used. [**30**:6.8.2.1]

66.4.8.2.2 In-rack sprinklers shall be installed in accordance with the provisions of NFPA 13.

Exception: As modified as follows:

(1) Alternate lines of in-rack sprinklers shall be staggered vertically in the longitudinal flue space.
(2) Sprinkler heads of multiple-level sprinkler systems shall be provided with water shields unless they are separated by horizontal barriers or are specifically listed for installation without water shields.
(3) A vertical clear space of at least 6 in. (150 mm) shall be maintained between the sprinkler deflector and the top of the tier of storage.
(4) Sprinkler discharge shall not be obstructed by horizontal rack structural members.
(5) Longitudinal and transverse flue spaces of at least 6 in. (150 mm) shall be maintained between each rack load. [30:6.8.2.2]

66.4.8.2.3 Ceiling sprinklers shall be installed in accordance with NFPA 13 and shall be permitted to have the following maximum head spacing:

(1) Classes I, II, and IIIA liquids: 100 ft^2 (9.3 m^2) per sprinkler head
(2) Class IIIB liquids: 120 ft^2 (11.1 m^2) per sprinkler head [**30**:6.8.2.3]

66.4.8.2.3.1 If ordinary or intermediate temperature–rated K-25 extended-coverage sprinklers are used, the maximum area per sprinkler shall be governed by the listing of the sprinkler, rather than by the limitations of 66.4.8.2.3. [**30**:6.8.2.3.1]

Table 66.4.8.2(c) Foam-Water Sprinkler Protection for Single- or Double-Row Rack Storage of Metal Containers, Intermediate Bulk Containers, and Portable Tanks (for Nonmiscible Liquids or Miscible Liquids with Flammable Liquid Concentration >50% by Volume)

				Ceiling						
				Sprinkler Type						
Liquid Class	Container Size (gal)	Maximum Storage Height (ft)	Maximum Ceiling Height (ft)	Nominal K-Factor	Response[a]	Density (gpm/ft^2)	Design Area (ft^2)[b]	In-Rack Sprinkler Protection	Notes	Fire Test Ref.[c]
Nonrelieving-Style Container										
IB, IC, II, or IIIA	≤5	25	30	≥8.0	SR or QR	0.30	2000	Every level	2, 3	1
	>5 and ≤60	25	30	≥8.0	SR	0.30	3000	Every level	2, 4	2
IIIB	≤60	40	50	≥8.0	SR	0.30	2000	One line every other level, beginning above first storage level	2	3
Relieving-Style Containers[d]										
IB, IC, II, IIIA	≤5	25	30	≥8.0	SR or QR	0.30	2000	One line every other level, beginning above first storage level	2, 3	4
	>5 and ≤60, portable tanks, IBCs	25	30	≥8.0	SR	0.30	3000	One line every other level, beginning above first storage level	2, 4	5
IIIB	≤60	40	50	≥8.0	SR	0.30	2000	One line every other level, beginning above first storage level	2	6

Notes:

(1) For SI units, 1 gal = 3.8 L; 1 ft = 0.3 m; 1 ft^2 = 0.09 m^2; 1 gpm/ft^2 = 40.7 L/min/m^2 = 40.7 mm/min.

(2) Space in-rack sprinklers on maximum 10 ft centers, staggered vertically. Base design in 30 gpm per sprinkler, with six hydraulically most remote sprinklers operating in each of upper three levels. Sprinklers are K-5.6 or K-8.0, SR or QR, ordinary temperature, with shields. Hydraulic design can be reduced to three sprinklers operating per level — three levels operating simultaneously when using a pre-primed foam-water system installed in accordance with NFPA 16, *Standard for the Installation of Foam-Water Sprinkler and Foam-Water Spray Systems,* and maintained according to NFPA 25, *Standard for the Inspection, Testing, and Maintenance of Water-Based Fire Protection Systems.*

(3) Design area can be reduced to 1500 ft^2 (140 m^2) when using a pre-primed foam-water system installed in accordance with NFPA 16 and maintained according to NFPA 25.

(4) Design area can be reduced to 2000 ft^2 (186 m^2) when using a pre-primed foam-water system installed in accordance with NFPA 16 and maintained according to NFPA 25.

[a]SR = standard response and QR = quick response, where both are listed.

[b]High-temperature ceiling sprinklers.

[c]See Table D.2(c) of NFPA 30 for references to fire tests on which the protection criteria given in this table are based.

[d]Both ¾ in. (20 mm) and 2 in. (50 mm) listed and labeled pressure-relieving mechanisms are required on containers greater than 6 gal (23 L) capacity.

[**30**:Table 6.8.2(c)]

Table 66.4.8.2(d) Foam-Water Sprinkler Protection for Bulk or Palletized Storage of Metal Containers, Intermediate Bulk Containers, and Portable Tanks (for Nonmiscible Liquids or Miscible Liquids with Flammable Liquid Concentration > 50% by Volume)

Liquid Class	Container Size and Arrangement (gal)	Maximum Storage Height (ft)	Maximum Ceiling Height (ft)	Ceiling: Sprinkler Type: Nominal K-Factor	Ceiling: Sprinkler Type: Response[a]	Ceiling: Density (gpm/ft^2)	Ceiling: Design Area (ft^2)[b]	Notes	Fire Test Ref.[c]
				Nonrelieving-Style Container					
IB, IC, II, or IIIA	≤5 cartoned	11	30	≥11.2	SR or QR	0.40	3000	3	1
	≤5 uncartoned	12	30	≥8.0	SR or QR	0.30	3000	3	2
	>5 and ≤60	5[d]	30	≥8.0	SR	0.30	3000	3	3
				Relieving-Style Containers					
IB, IC, II, or IIIA	>5 and ≤60	6½	30	≥8.0	SR	0.30	3000	2, 4	4
	>5 and ≤60	10[e]	33	≥11.2	SR	0.45	3000	2, 4	6
	>5 and ≤60	13 ft 9 in.[f]	33	≥11.2	SR	0.60	3000	2, 4	7
	Portable tanks, IBCs	2-high maximum	30	≥8.0	SR	0.30	3000	2	5

Notes:
(1) For SI units, 1 gal = 3.8 L; 1 ft = 0.3 m; 1 ft^2 = 0.09 m^2; 1 gpm/ft^2 = 40.7 L/min/m^2 = 40.7 mm/min.
(2) Drums placed on open slatted pallet, not nested, to allow pressure relief from drums on lower levels.
(3) Design area can be reduced to 2000 ft^2 (186 m^2) when using a pre-primed foam-water system installed in accordance with NFPA 16 and maintained according to NFPA 25.
(4) Both ¾ in. (20 mm) and 2 in. (50 mm) listed pressure-relieving mechanisms are required on containers greater than 6 gal (23 L) capacity.
[a]SR = standard response and QR = quick response, where both are listed.
[b]High-temperature ceiling sprinklers.
[c]See Table D.2(d) of NFPA 30 for references to fire tests on which the protection criteria given in this table are based.
[d]1 high.
[e]3 high.
[f]4 high.
[**30**:Table 6.8.2(d)]

Table 66.4.8.2(e) Water Sprinkler Protection for Single-, Double-, and Multi-Row Open Frame Rack Storage of Class IIIB Liquids in Plastic Containers (for Nonmiscible Flammable and Combustible Liquids or Miscible Flammable and Combustible Liquids with Concentration >50% of Volume)

Liquid Type or Closed-Cup Flash Point (°F)	Container Size (gal)	Maximum Building or Ceiling Height	Packaging Type	Maximum Storage Height	Minimum Aisle Width (ft)	Rack Width	Sprinkler Protection Criteria: Ceiling Sprinkler Type	Sprinkler Protection Criteria: Fire Protection Scheme	Sprinkler Protection Criteria: Fire Test Ref.*
≥200	≤5	Unlimited	Cartoned or uncartoned	Unlimited	4	Any	Any	Scheme A *(see 66.4.8.6.1)*	1

Note: For SI units, 1 gal = 3.8 L; 1 ft = 0.3 m.
*See Table D.2(e) of NFPA 30 for reference to the fire test on which the protection criteria given in this table are based.
[**30**:Table 6.8.2(e)]

Table 66.4.8.2(f) Water Sprinkler Protection for Shelf Storage of Metal Containers (for Nonmiscible Liquids or Miscible Liquids with Flammable Liquid Concentration >50% by Volume)

				Nonrelieving-Style Container					
				Ceiling					
				Sprinkler Type					
Liquid Class	Container Size (gal)	Maximum Storage Height (ft)	Maximum Ceiling Height (ft)	Nominal K-Factor	Response[a]	Density (gpm/ft^2)	Design Area (ft^2)[b]	Notes	Fire Test Ref.[c]
IB, IC, II, or III	≤1	6	18	≥8.0	SR or QR	0.19	1500	2, 3	1

Notes:
(1) For SI units, 1 gal = 3.8 L; 1 ft = 0.3 m; 1 ft^2 = 0.09 m^2; 1 gpm/ft^2 = 40.7 L/min/m^2 = 40.7 mm/min.
(2) Protection for mercantile shelving that is 2 ft (600 mm) or less in depth per side, with backing between each side.
(3) Minimum hose stream demand 250 gpm (950 L/min) for 2 hours.
[a]SR = standard response and QR = quick response, where both are listed.
[b]High-temperature ceiling sprinklers.
[c]See Table D.2(f) of NFPA 30 for references to fire tests on which the protection criteria given in this table are based.
[**30**:Table 6.8.2(f)]

Table 66.4.8.2(g) Water Sprinkler Protection for Single- and Double-Row Open Frame Rack Storage of Water-Miscible Liquids in Plastic Containers (Flammable Liquid Concentration >50% by Volume)

							Sprinkler Protection Criteria		
Liquid Class	Container Size (gal)	Maximum Building or Ceiling Height (ft)	Packaging Type	Maximum Storage Height (ft)	Minimum Aisle Width (ft)	Rack Width (ft)	Ceiling Sprinkler Type	Fire Protection Scheme	Fire Test Ref.*
IB, IC, II, III	≤1	Unlimited	Cartoned	Unlimited	8	≤9	Any	Scheme B *(see 66.4.8.6.2)*	1
	≤60	30	Uncartoned or cartoned	25	8	≤9	Standard spray sprinklers	Scheme B *(see 66.4.8.6.2)*	2
	≤16 oz	Unlimited	Cartoned	Unlimited	8	9	Any	Scheme A *(see 66.4.8.6.1)*	3

Note: For SI units, 1 gal = 3.8 L; 1 ft = 0.3 m.
*See Table D.2(g) of NFPA 30 for reference to the fire test on which the protection criteria given in this table are based.
[**30**:Table 6.8.2(g)]

Table 66.4.8.2(h) Water Sprinkler Protection for Rack and Palletized Storage of Class IB, IC, II, IIIA, and IIIB Liquids in Relieving-Style Metal Containers with Aisles a Minimum of 7.5 ft Wide (for Nonmiscible Flammable or Combustible Liquids or Miscible Flammable or Combustible Liquids with Concentrations >50% by Volume)

							Ceiling Sprinkler Protection Criteria		In-Rack Sprinkler Protection Criteria					
										Sprinkler Type				
Storage Arrangement	Rack Width (ft)	Shelf Type	Building Height (ft)	Max. Storage Height (ft)	Container Size (gal)	Packaging Type	Sprinkler Type/ K-Factor/ Temp. Rating[a]	Design (No. of Sprinklers @ Pressure)	In-Rack Layout[b]	Nominal K-factor	Response Temp. Rating[c]	In-Rack End Sprinkler Design Pressure *(see Notes 1 and 2)*	Notes	Fire Test Ref.[d]
Rack with 7.5 ft aisle	≤6	Open wire mesh and/or none	24	14	≤5 *(see Note 3)*	Uncartoned or cartoned	Pendent ESFR, K-14.0, Ordinary	12 @ 50 psig	Figure 66.4.8.6.3(a)	11.2	QR, Ordinary	10 psig	1–5	1
							Pendent ESFR, K-25.0, Ordinary	12 @ 25 psig	None	None	None	None	3, 4, 5	2
Rack with 8 ft aisle	≤9	None	30	20	≤1	Cartoned only	Pendent ESFR, K-14.0, Ordinary	12 @ 75 psig	None	None	None	None	6	3
				25	≤1	Cartoned only	Pendent ESFR, K-14.0, Ordinary	12 @ 50 psig	Figure 66.4.8.6.3 (d) or Figure 66.4.8.6.3 (e)	8.0	QR, Ordinary	15 psig	2, 3, 6	4
				25	≤5	Uncartoned or cartoned	Pendent ESFR, K-14.0, Ordinary	12 @ 75 psig	Figure 66.4.8.6.3 (b) or Figure 66.4.8.6.3 (c)	8.0	QR, Ordinary	30 psig	2, 3, 6	5
Palletized	DNA[e]	DNA	30	8	≤1	Cartoned only	Pendent ESFR, K-14.0, Ordinary	12 @ 50 psig	DNA	DNA	DNA	DNA	6	6
				12	≤5	Uncartoned or cartoned	Pendent ESFR, K-14.0, Ordinary	12 @ 75 psig	DNA	DNA	DNA	DNA	6	7

Notes:
(1) For SI units, 1 gal = 3.8 L; 1 in. = 25 mm; 1 ft = 0.3 m; 1 psig = 6.9 kPa.
(2) The in-rack sprinkler water demand shall be based on the simultaneous operation of the most hydraulically remote sprinklers as follows:
(a) Seven sprinklers where only one level of in-rack sprinklers is installed.
(b) Fourteen sprinklers (seven on each two top levels) where more than one level of in-rack sprinklers is installed.
(c) The in-rack end sprinkler design pressure as provided in the table.
(3) The in-rack sprinkler water demand shall be balanced with the ceiling sprinkler water demand at their point of connection.
(4) Nom. 1 gal (5 L) and 1 qt (1 L) containers do not need to be relieving style.
(5) Provide minimum 3 in. (76 mm) transverse flue at rack uprights.
[a]ESFR = early suppression fast response.
[b]Figure 66.4.8.6.3(a) through Figure 66.4.8.6.3(e) can be found in 66.4.8.6.3.
[c]QR = quick response, ordinary temperature range.
[d]See Table D.2(h) of NFPA 30 for references to fire tests on which the protection criteria given in this table are based.
[e]DNA = does not apply.
[30:Table 6.8.2(h)]

Table 66.4.8.2(i) Water Sprinkler Protection[a] for Bulk or Palletized Storage of Container Construction — Rigid Nonmetallic IBC[b] (for Nonmiscible Combustible Liquids or Miscible Combustible Liquids with Liquid Concentrations >50% by Volume)

				Ceiling				
				Sprinkler Type				
Liquid Class	Container Size[c] (gal)	Maximum Storage Height	Maximum Ceiling Height (ft)	Nominal K-Factor	Response	Density (gpm/ft^2)	Design Area (ft^2)	Fire Test Ref.[d]
II, III	≤793	1 high	30	≥11.2	High temp., SR[e]	0.45	3000	1
	≤793	2 high	30	≥11.2	High temp., SR	0.60[f]	3000	2

Note: For SI units, 1 gal = 3.8 L; 1 ft = 0.3 m; 1 ft^2 = 0.09 m^2; 1 gpm /ft^3 = 40.7 L/min/m^2 = 40.7 mm/min.
[a]Foam-water sprinkler protection shall be permitted to be substituted for water sprinkler protection, provided the same design criteria are used.
[b]Rigid nonmetallic IBC — A rigid nonmetallic IBC that is listed and labeled in accordance with UL 2368, *Standard for Fire Exposure Testing of Intermediate Bulk Containers for Flammable and Combustible Liquids*, or equivalent.
[c]See Annex E.1 of NFPA 30.
[d]See Table D.2(i) of NFPA 30 for reference to fire test on which the protection criteria given in this table are based.
[e]SR = standard response.
[f]Sprinkler-operating pressure shall be a minimum 30 psig (gauge pressure of 207 kPa).
[**30**:Table 6.8.2(i)]

Table 66.4.8.2(j) Water Sprinkler Protection for Single- and Double-Row, Open-Frame Rack Storage of Rigid Nonmetallic Intermediate Bulk Containers[a] (for Nonmiscible Class II and Class III Liquids and for Miscible Class II and Class III Liquids with >50% Class II and Class III Concentration by Volume)

						Sprinkler Protection Criteria		
Liquid Class	Container Capacity[b] (gal)	Maximum Building or Ceiling Height (ft)	Maximum Storage Height[c] (ft)	Minimum Aisle Width (ft)	Rack Width (ft)	Ceiling Sprinkler Type	Fire Protection Scheme	Fire Test Ref.
II, III	≤793	30	25	8	9	Standard spray	Scheme B *(see 66.4.8.6.2)*	1[d]

Note: For SI units, 1 gal = 3.8 L; 1 ft = 0.3 m.
[a]Rigid nonmetallic IBC—A rigid nonmetallic IBC that is listed and labeled in accordance with UL 2368, *Standard for Fire Exposure Testing of Intermediate Bulk Containers for Flammable and Combustible Liquids*, or equivalent.
[b]See Annex E.1 of NFPA 30.
[c]Tier height shall not exceed 6 ft (1.8 m). (*See 66.4.8.6.2.*)
[d]See Table D.2(j) of NFPA 30 for references to fire tests on which protection criteria are based.
[**30**:Table 6.8.2(j)]

66.4.8.2.4 Protection systems that are designed and developed based on full-scale fire tests performed at an approved test facility or on other engineered protection schemes shall be considered an acceptable alternative to the protection criteria set forth in 66.4.8. Such alternative protection systems shall be approved by the AHJ. [**30**:6.8.2.4]

66.4.8.2.5 Water-based fire protection systems shall be inspected, tested, and maintained in accordance with NFPA 25. [**30**:6.8.2.5]

66.4.8.2.6 The ceiling heights given in Table 66.4.8.2(a) through Table 66.4.8.2(k) shall be permitted to be increased by a maximum of 10 percent if an equivalent percent increase in ceiling sprinkler design density is provided. [**30**:6.8.2.6]

66.4.8.2.7 Low-expansion foam-water sprinkler systems shall be designed and installed in accordance with NFPA 16. The system shall have at least 15 minutes of foam concentrate, based on the required design flow rate. [**30**:6.8.2.7]

66.4.8.2.8* Foam-water sprinkler systems shall be designed to provide foam-water solution at the design concentration with as few as four sprinklers flowing. [**30**:6.8.2.8]

66.4.8.3 Other Automatic Fire Protection Systems. Alternate fire protection systems, such as automatic water spray systems, automatic water mist systems, high-expansion foam systems, dry chemical extinguishing systems, alternate sprinkler system configurations, or combinations of systems shall be permitted if approved by the AHJ. Such alternate systems shall be designed and installed in accordance with the appropriate NFPA standard and with manufacturer's recommendations for the system(s) selected. [**30**:6.8.3]

66.4.8.4 Water Supply. Water supplies for automatic sprinklers, other water-based protection systems, hose streams, and hydrants shall be capable of supplying the anticipated water flow demand for a minimum of 2 hours. [**30**:6.8.4]

Table 66.4.8.2(k) Water Sprinkler Protection for Bulk or Palletized Metal Containers of Unsaturated Polyester Resins (UPRs), Containing up to 50% by Volume Class IC, Class II, or Class IIIA Liquid Constituents *(See 66.4.8.1.7.)*

Container Size (gal)	Maximum Storage Height (ft)	Maximum Ceiling Height (ft)	Ceiling: Sprinkler Type: Nominal K-Factor	Ceiling: Sprinkler Type: Response	Ceiling: Density (gpm/ft^2)	Ceiling: Design Area (ft^2)	Notes	Fire Test Ref.[b]
Relieving-Style Containers[a]								
>5 and <60	10	33	11.2	Standard Response, 165°F or 286°F	0.45	3000	1, 2	1

Notes:
(1) For SI units, 1 gal = 3.8 L; 1 ft = 0.3 m; 1 gpm/ft^2 = 40.7 L/min/m^2 = 40.7 mm/min; 1 ft^2 = 0.09 m^2.
(2) Drums placed on open, slatted pallet, not nested, to allow pressure relief from drums on lower levels.
(3) Storage areas containing unsaturated polyester resin (UPR) shall not be located in the same spill containment area or drainage path of other Class I or Class II liquids, unless protected as required for such other liquids.
[a]Both ¾ in. (20 mm) and 2 in. (50 mm) listed and labeled pressure-relieving devices are required on containers that exceed 6 gal (23 L) capacity.
[b]See Table D.2(k) of NFPA 30 for references to fire tests on which the protection criteria given in this table are based.
[30:Table 6.8.2(k)]

66.4.8.5 Containment and Drainage. Containment and drainage shall be provided in accordance with Figure 66.4.8.5, when protection systems are installed in accordance with the provisions of Table 66.4.8.2(a) through Table 66.4.8.2(k). [30:6.8.5]

66.4.8.5.1* Where control of liquid spread is required, means to limit the spread of liquid to an area not greater than the design discharge area of the ceiling sprinkler system shall be provided. [30:6.8.5.1]

66.4.8.6 Fire Protection Schemes.

66.4.8.6.1 Fire Protection Scheme A.

66.4.8.6.1.1 Plywood of minimum ⅜ in. (10 mm) or sheet metal of minimum 22 gauge barriers and in-rack sprinklers shall be installed in accordance with Figure 66.4.8.6.1.1(a) and Figure 66.4.8.6.1.1(b). Figure 66.4.8.6.1.1(c) shall be used for storage of Class IIIB liquids. Vertical baffles shall not be provided between in-rack sprinklers. [30:6.8.6.1.1]

66.4.8.6.1.2 Listed or approved K-8.0, ordinary temperature–rated quick-response in-rack sprinklers shall be installed below each barrier level. The in-rack sprinklers shall be designed to provide a minimum end head pressure of 50 psig (345 kPa gauge) out of the hydraulically most remote six sprinklers (three on two lines) if one barrier level, or the most remote eight sprinklers (four on two lines) if two or more barrier levels, are provided. [30:6.8.6.1.2]

66.4.8.6.1.3 If there are adjacent bays of in-rack arrays not dedicated to storage of liquids, the barrier and in-rack sprinkler protection shall be extended at least 8 ft (2.4 m) beyond the area devoted to liquid storage. In addition, adjacent racks across the aisles on each side of the liquid storage shall be protected in accordance with this protection scheme. [30:6.8.6.1.3]

66.4.8.6.1.4 Ceiling sprinkler demand shall not be included in the hydraulic calculations for in-rack sprinklers. Water demand at point of supply shall be calculated separately for in-rack and ceiling sprinklers and shall be based on the greater demand. [30:6.8.6.1.4]

66.4.8.6.1.5 Ceiling sprinkler protection shall meet the following:

(1) The ceiling sprinkler protection shall be designed to protect the surrounding occupancy.
(2) Any sprinkler type shall be acceptable for the ceiling sprinkler protection.
(3) If standard spray sprinklers are used, they shall be capable of providing not less than 0.20 gpm/ft^2 over 3000 ft^2 (8.1 L/min over 270 m^2).
(4) If the liquid storage does not extend to the full height of the rack, protection for commodities stored above the top horizontal barrier shall meet the requirements of NFPA 13 for the commodities stored, based on the full height of the rack. [30:6.8.6.1.5]

66.4.8.6.1.6 Barriers shall not be required for storage of liquids with a closed-cup flash point of 450°F (230°C) or greater. If barriers are omitted, the following modifications to the protection scheme shall be provided:

(1) Ceiling sprinkler protection shall provide a minimum density of 0.3 gpm/ft^2 over the most hydraulically remote 2000 ft^2 (12.2 L/min/m^2 over 180 m^2), using ordinary temperature, standard-response sprinklers with a nominal K-factor equal to or greater than 8.0.
(2) The ceiling sprinkler water demand and the in-rack water demand shall be balanced at their point of connection. [30:6.8.6.1.6]

66.4.8.6.1.7 A 500 gpm (1900 L/min) hose stream allowance shall be provided. [30:6.8.6.1.7]

66.4.8.6.2 Fire Protection Scheme B.

66.4.8.6.2.1 Horizontal barriers of plywood of minimum ⅜ in. (10 mm) thickness or sheet metal of minimum 22 gauge and in-rack sprinklers shall be installed in accordance with Figure 66.4.8.6.2.1(a), Figure 66.4.8.6.2.1(b), or Figure 66.4.8.6.2.1(c). Vertical baffles shall not be provided between in-rack sprinklers. [30:6.8.6.2.1]

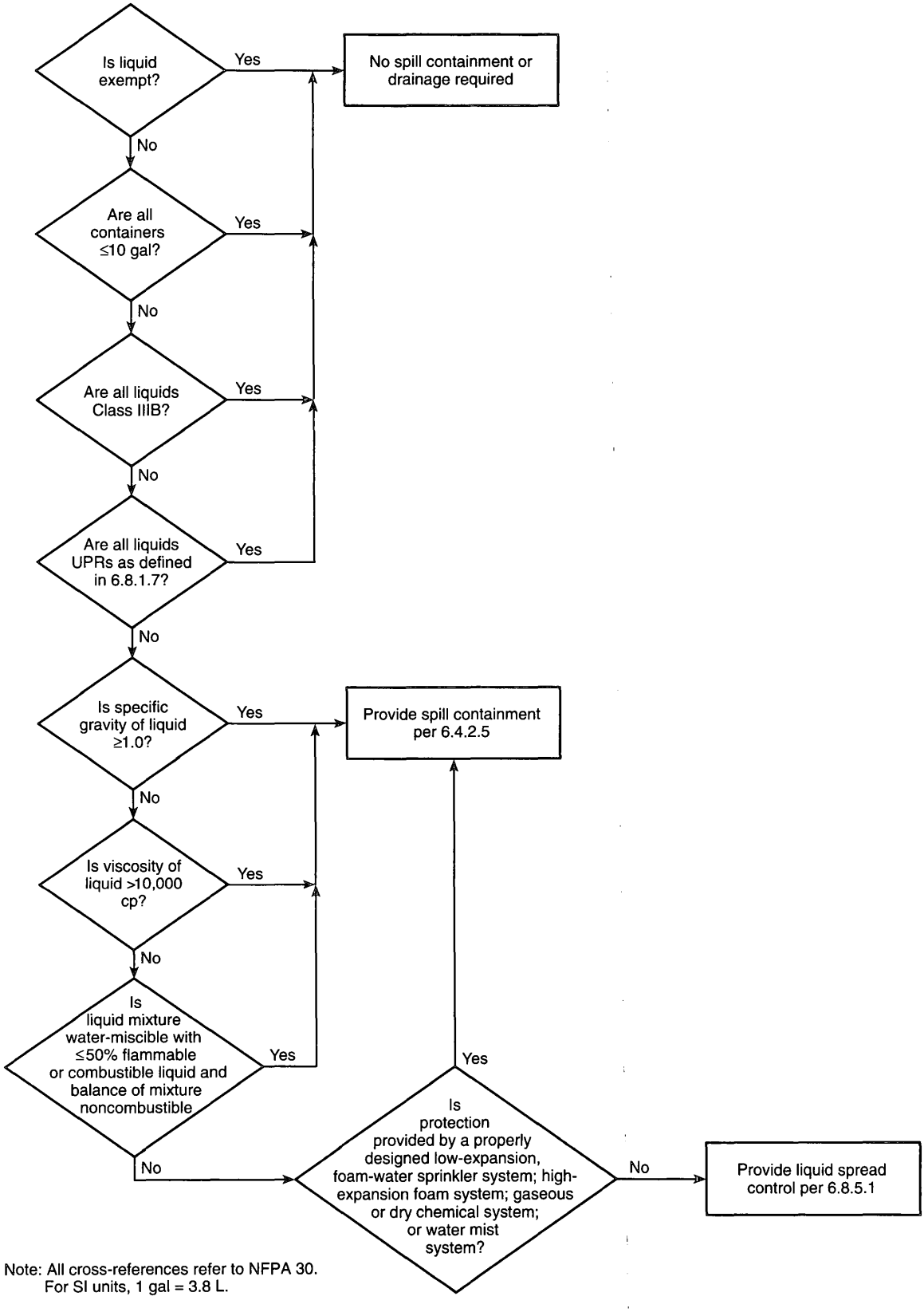

Note: All cross-references refer to NFPA 30.
For SI units, 1 gal = 3.8 L.

FIGURE 66.4.8.5 Spill Containment and Liquid Spread Control for Protected Storage. [30:Figure 6.8.5]

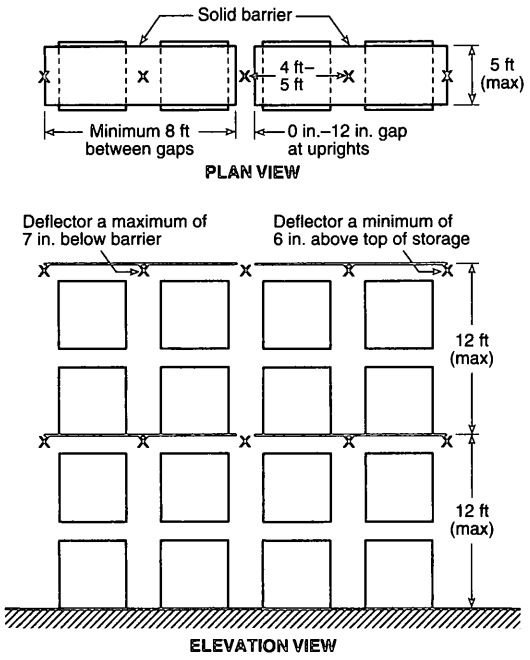

Notes: (1) For SI units, 1 in. = 25 mm; 1 ft = 0.3 m.
(2) X denotes K-8.0, ordinary, QR in-rack sprinkler.

FIGURE 66.4.8.6.1.1(a) Single-Row Rack Sprinkler Layout. [30:Figure 6.8.6.1.1(a)]

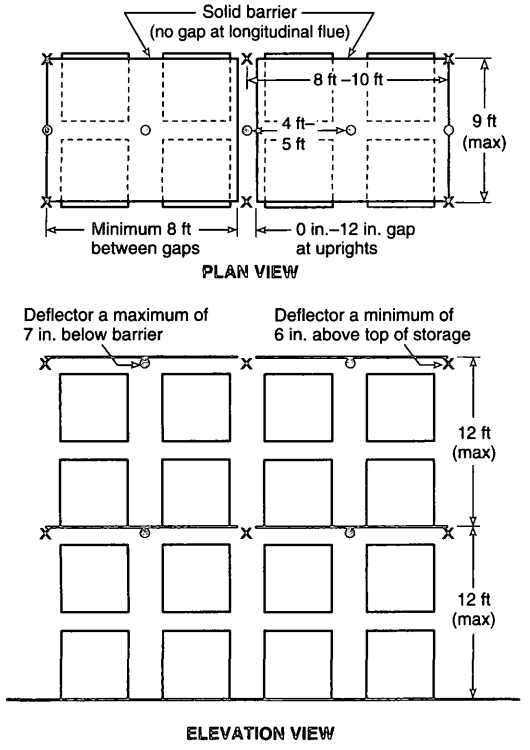

Notes: (1) For SI units, 1 in. = 25 mm; 1 ft = 0.3 m.
(2) ⊙ denotes K-8.0, ordinary, QR longitudinal flue sprinkler.
(3) X denotes K-8.0, ordinary, QR face sprinkler.

FIGURE 66.4.8.6.1.1(b) Double-Row Rack Sprinkler Layout. [30:Figure 64.8.6.1.1(b)]

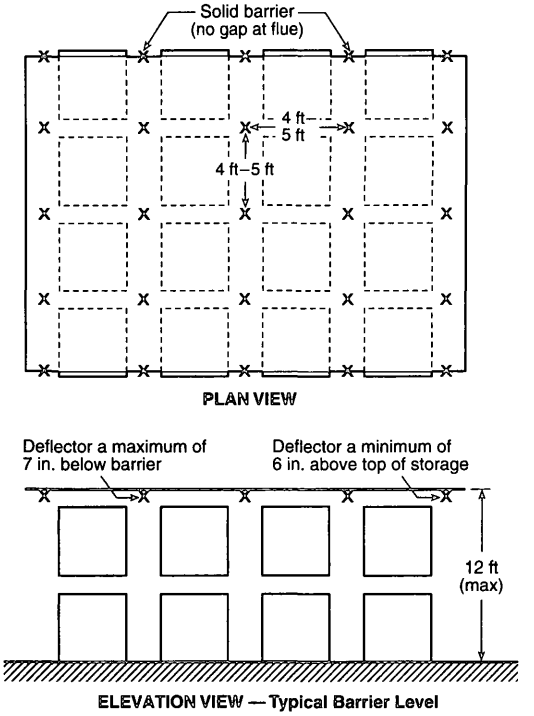

Notes: (1) For SI units, 1 in. = 25 mm; 1 ft = 0.3 m.
(2) X denotes K-8.0, ordinary, QR in-rack sprinkler.

FIGURE 66.4.8.6.1.1(c) Multiple-Row Rack Sprinkler Layout. [30:Figure 6.8.6.1.1(c)]

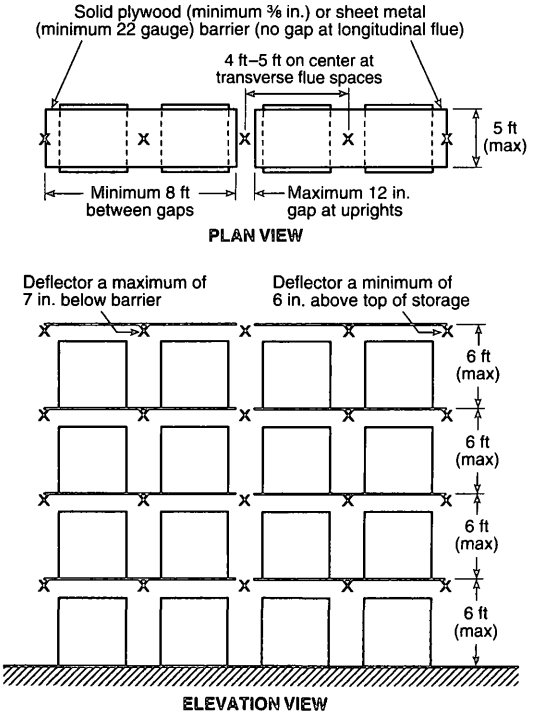

Notes: (1) For SI units, 1 in. = 25 mm; 1 ft = 0.3 m.
(2) X denotes K-8.0, ordinary, QR in-rack sprinkler.

FIGURE 66.4.8.6.2.1(a) Single-Row Rack Sprinkler Layout, Sprinklers in Center of Rack. [30:Figure 6.8.6.2.1(a)]

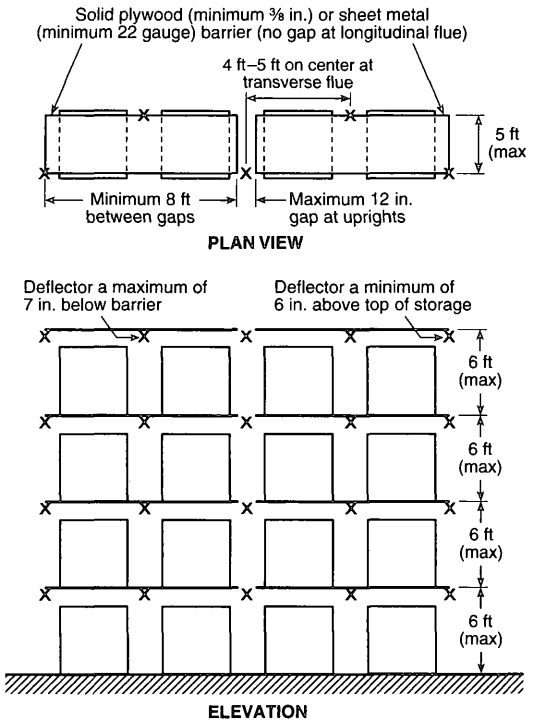

Notes: (1) For SI units, 1 in. = 25 mm; 1 ft = 0.3 m.
(2) X denotes K-8.0, ordinary, QR in-rack sprinkler.

FIGURE 66.4.8.6.2.1(b) Single-Row Rack Sprinkler Layout, Sprinkler on Face of Rack. [30:Figure 6.8.6.2.1(b)]

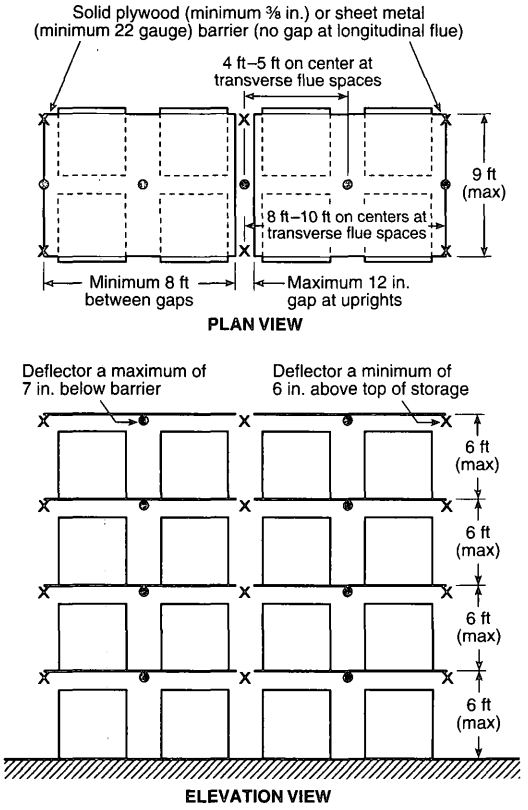

Notes: (1) For SI units, 1 in. = 25 mm; 1 ft = 0.3 m.
(2) ® denotes K-8.0, ordinary, QR longitudinal flue sprinkler.
(3) X denotes K-8.0, ordinary, QR face sprinkler.

FIGURE 66.4.8.6.2.1(c) Double-Row Rack Sprinkler Layout. [30:Figure 6.8.6.2.1(c)]

66.4.8.6.2.2 In-rack sprinklers shall be nominal K-factor of 8.0, ordinary temperature–rated, quick-response sprinklers and shall be installed below each horizontal barrier. The design criteria of the in-rack sprinkler system shall meet the following:

(1) For containers that do not exceed 60 gal (230 L) capacity and where there is only one horizontal barrier, the in-rack sprinkler system shall provide a minimum head pressure of 50 psig (345 kPa gauge) from the hydraulically most remote six sprinklers, three each on two lines. Where there are two or more horizontal barriers, the in-rack sprinkler system shall provide a minimum head pressure of 50 psig (345 kPa gauge) from the hydraulically most remote eight sprinklers, four each on two lines.
(2) For containers that exceed 60 gal (230 L) capacity, but do not exceed 793 gal (3000 L), the in-rack sprinkler system shall provide a minimum head pressure of 50 psig (345 kPa gauge) from the hydraulically most remote 12 sprinklers, six each on two lines. [**30:**6.8.6.2.2]

66.4.8.6.2.3 If there are adjacent bays or racks that are not dedicated to storage of liquids, the barrier and in-rack sprinkler system shall be extended beyond the area devoted to liquid storage as follows:

(1) For containers that do not exceed 1 gal (3.8 L) capacity, the protection shall be extended at least 8 ft (2.4 m) beyond the area devoted to liquid storage. In addition, adjacent racks across the aisles on each side of the liquid storage shall be protected in accordance with NFPA 13 for the commodity stored.
(2) For containers that exceed 1 gal (3.8 L) capacity, but do not exceed 793 gal (3000 L), the protection shall be extended at least 8 ft (2.4 m) beyond the area devoted to liquid storage. In addition, the protection shall be extended to protect adjacent racks across the aisles on each side of the liquid storage. [**30:**6.8.6.2.3]

66.4.8.6.2.4 Ceiling sprinkler protection for containers that do not exceed 1 gal (3.8 L) capacity shall meet the following:

(1) The ceiling sprinkler protection shall be designed to protect the surrounding occupancy.
(2) The ceiling sprinkler water demand shall not be included in the hydraulic calculations for the in-rack sprinkler protection. Water demand at the point of supply shall be calculated separately for the in-rack and ceiling protection and shall be based on the greater of the two.
(3) Any sprinkler type shall be acceptable for the ceiling sprinkler protection. If standard spray sprinklers are used, they shall be capable of providing not less than 0.20 gpm/ft^2 over 3000 ft^2 (8.1 L/min/m^2 over 270 m^2).
(4) If the liquid storage does not extend to the full height of the rack, protection for commodities stored above the top horizontal barrier shall meet the requirements of NFPA 13 for the commodities stored, based on the full height of the rack. [**30:**6.8.6.2.4]

66.4.8.6.2.5 Ceiling sprinkler protection for containers that exceed 1 gal (3.8 L) capacity, but do not exceed 60 gal (230 L), shall meet the following:

(1) The ceiling sprinkler protection shall provide a minimum density of 0.45 gpm/ft^2 over the most hydraulically remote 3000 ft^2 (18.3 mm/min/m^2 over 270 m^2), using high-temperature, standard-response sprinklers of nominal K-factor of 8.0 or 11.2. Other types of sprinklers shall not be used.
(2) The ceiling sprinkler water demand and the in-rack sprinkler demand shall be balanced at the point of connection. [30:6.8.6.2.5]

66.4.8.6.2.6 Ceiling sprinkler protection for containers that exceed 60 gal (230 L) capacity, but do not exceed 793 gal (3000 L), shall meet the following:

(1) The ceiling sprinkler protection shall be designed to provide a minimum density of 0.60 gpm/ft^2 over the most remote 3000 ft^2 (24.4 mm/min/m^2 over 270 m^2), using K-11.2 or K-8.0, high-temperature-rated, standard-response sprinklers. Other types of sprinklers shall not be accepted.
(2) The ceiling sprinkler water demand and the in-rack sprinkler demand shall be balanced at the point of connection. [30:6.8.6.2.6]

66.4.8.6.2.7 A 500 gpm (1900 L/min) water supply capacity shall be provided for hose streams. [30:6.8.6.2.7]

66.4.8.6.3 In-Rack Sprinkler Layouts for Table 66.4.8.2(h). Figure 66.4.8.6.3(a) through Figure 66.4.8.6.3(e) shall be used to determine layout of in-rack sprinklers for Table 66.4.8.2(h). [30:6.8.6.3]

66.4.9 Manual Fire Protection. Portable fire extinguishers or pre-connected hoselines, either 1½ in. (38 mm) lined fire hose or 1 in. (25 mm) hard rubber hose, shall be provided where liquids are stored. If 1½ in. (38 mm) lined fire hose is used, it shall be installed in accordance with NFPA 14, *Standard for the Installation of Standpipe and Hose Systems.* [30:6.9]

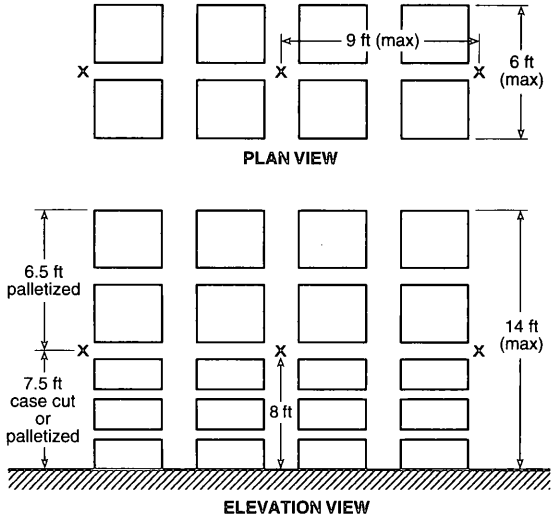

Notes: (1) For SI units, 1 in. = 25 mm; 1 ft = 0.3 m.
(2) X denotes K-11.2, ordinary, QR in-rack sprinkler.

FIGURE 66.4.8.6.3(a) Modified Double-Row Rack Sprinkler Layout. [30:Figure 6.8.6.3(a)]

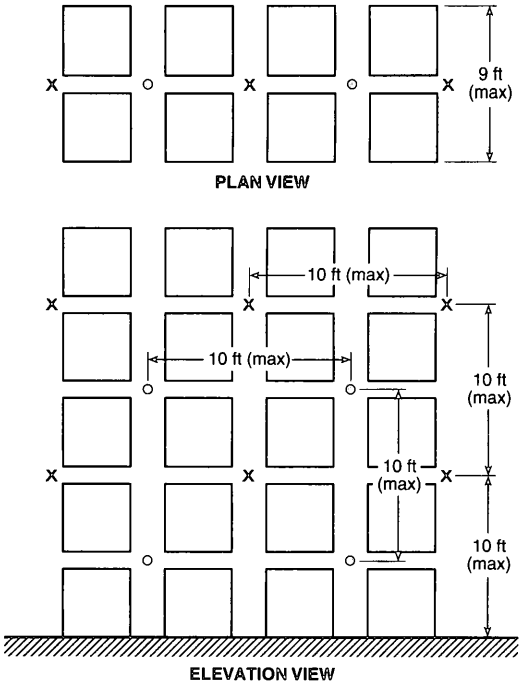

Notes: (1) For SI units, 1 in. = 25 mm; 1 ft = 0.3 m.
(2) O and X denote K-8.0, QR in-rack sprinklers.

FIGURE 66.4.8.6.3(b) Double-Row Rack Sprinkler Layout. [30:Figure 6.8.6.3(b)]

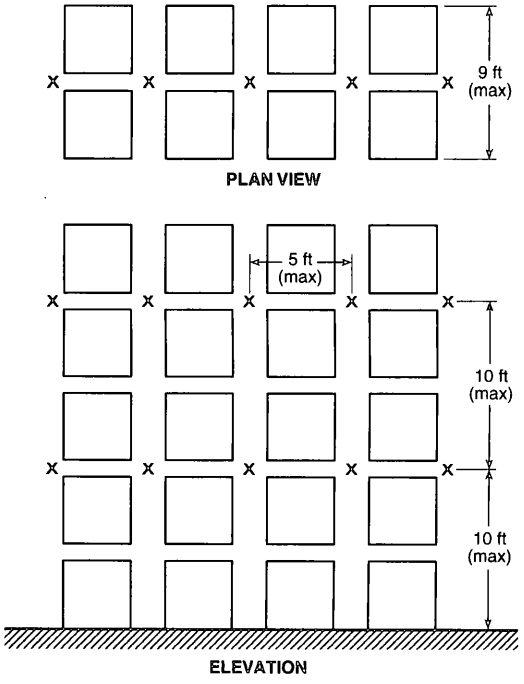

Notes: (1) For SI units, 1 in. = 25 mm; 1 ft = 0.3 m.
(2) X denotes K-8.0, QR in-rack sprinkler.

FIGURE 66.4.8.6.3(c) Double-Row Rack Sprinkler Layout. [30:Figure 6.8.6.3(c)]

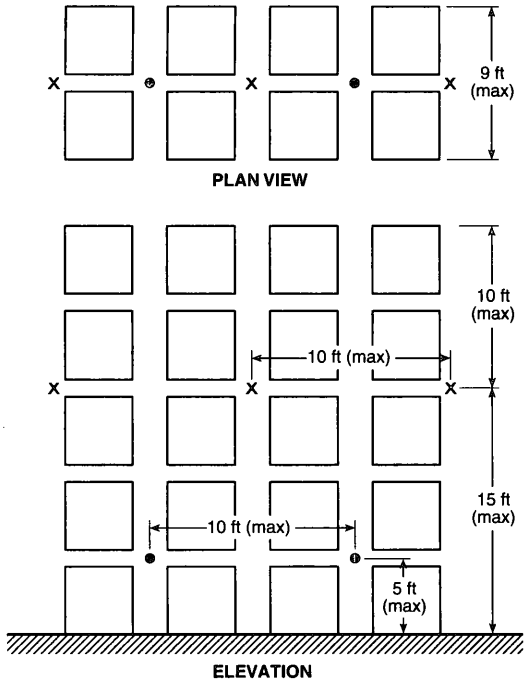

Notes: (1) For SI units, 1 in. = 25 mm; 1 ft = 0.3 m.
(2) ● and X denote K-8.0, QR in-rack sprinklers.

FIGURE 66.4.8.6.3(d) Double-Row Rack Sprinkler Layout. [30:Figure 6.8.6.3(d)]

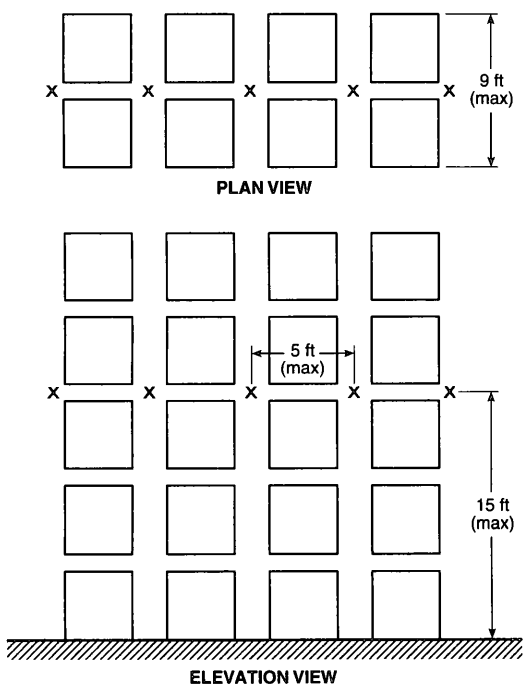

Notes: (1) For SI units, 1 in. = 25 mm; 1 ft = 0.3 m.
(2) X denotes K-8.0, QR in-rack sprinkler.

FIGURE 66.4.8.6.3(e) Double-Row Rack Sprinkler Layout. [30:Figure 6.8.6.3(e)]

66.4.9.1 Portable fire extinguishers shall meet the following requirements:

(1) At least one portable fire extinguisher having a capability of not less than 40:B shall be located outside of, but not more than 10 ft (3 m) from, the door opening into an inside liquid storage area.
(2) At least one portable fire extinguisher having a capability of not less than 40:B shall be located within 30 ft (9 m) of any Class I or Class II liquid storage area that is located outside of an inside liquid storage area or liquid warehouse.

Exception: An acceptable alternative is at least one portable fire extinguisher having a capacity of 80:B located within 50 ft (15 m) of such a storage area. [30:6.9.1]

66.4.9.2 Hoseline connections shall meet the following requirements:

(1) In protected general-purpose warehouses and in protected liquid storage areas, hoseline connections shall be provided as appropriate.
(2) The water supply for hoseline connections shall be sufficient to meet the fixed fire protection demand plus a total of at least 500 gpm (1900 L/min) for inside and outside hoseline connections, unless otherwise specified in Table 66.4.8.2(a) through Table 66.4.8.2(k).
(3) Water supplies for hose connections and hydrants shall be capable of supplying the demand for at least 2 hours. [**30:**6.9.2]

66.4.10 Control of Ignition Sources. Precautions shall be taken to prevent the ignition of flammable vapors from sources of ignition that include, but are not limited to, the following:

(1) Open flames
(2) Lightning
(3) Smoking
(4) Cutting or welding
(5) Hot surfaces
(6) Frictional heat
(7) Static electricity
(8) Electrical or mechanical sparks
(9) Spontaneous heating, including heat-producing chemical reactions
(10) Radiant heat [**30:**6.10]

66.4.10.1* Materials that are water-reactive, as described in NFPA 704, shall not be stored in the same area with other liquids. [**30:**6.10.1]

66.4.10.2* Power-operated industrial trucks used to move Class I liquids shall be selected, operated, and maintained in accordance with NFPA 505. [**30:**6.10.2]

66.5 Operations.

66.5.1 Scope.

66.5.1.1 Section 66.5 shall apply to operations involving the use or handling of liquids either as a principal or incidental activity, except as covered elsewhere in this chapter or in other NFPA standards. [**30:**7.1.1]

66.5.1.2* The provisions of Section 66.5 shall relate to the control of hazards of fire involving liquids. [**30:**7.1.2]

66.5.1.3 Provisions of Section 66.5 shall not prohibit the use of movable tanks in conjunction with the dispensing of flammable or combustible liquids into fuel tanks of motorized equipment outside on premises not accessible to the public. Such uses shall only be made with the approval of the AHJ. [**30:**7.1.3]

66.5.2 General.

66.5.2.1 Liquid processing operations shall be located and operated so that they do not constitute a significant fire or explosion hazard to life, to property of others, or to important buildings or facilities within the same plant. Specific requirements shall be dependent on the inherent risk in the operations themselves, including the liquids being processed, operating temperatures and pressures, and the capability to control any liquid or vapor releases or fire incidents that could occur. The interrelationship of the many factors involved shall be based on good engineering and management practices to establish suitable physical and operating requirements. [**30**:7.2.1]

66.5.2.2 Requirements for specific operations shall be covered in Section 7.4 through Section 7.8 and Section 7.10 and Section 7.11 of NFPA 30. Requirements for procedures and practices for fire prevention, fire protection, and fire control in these operations shall be covered in Section 7.9 through Section 7.12 of NFPA 30 and shall be applied as appropriate. [**30**:7.2.2]

66.5.3 Facility Design.

66.5.3.1 Scope. Subsection 66.5.3 shall apply to operations where the handling and use of liquids is a principal activity. This section shall not apply to operations where the handling and use of liquids is incidental to the principal activity. *(See Section 7.5 of NFPA 30.)* [**30**:7.3.1]

66.5.3.2 Location. Liquid processing vessels and equipment shall be located in accordance with the requirements of this subsection. [**30**:7.3.2]

66.5.3.2.1 Processing vessels and buildings containing such processing vessels shall be located so that a fire involving the vessels does not constitute an exposure hazard to other occupancies. The minimum distance of a processing vessel to a property line that is or can be built upon, including the opposite side of a public way; to the nearest side of a public way; or to the nearest important building on the same property shall be as follows:

(1) In accordance with Table 66.5.3.2.1
(2) Determined by an engineering evaluation of the process, followed by application of sound fire protection and process engineering principles

*Exception: Where process vessels are located in a building and the exterior wall facing the exposure (line of adjoining property that is or can be built upon or nearest important building on the same property) is greater than 25 ft (7.6 m) from the exposure and is a blank wall having a fire resistance rating of not less than 2 hours, any greater distances required by Table 66.5.3.2.1 shall be permitted to be waived. If the exterior wall is a blank wall having a fire resistance rating of not less than 4 hours, all distances required by Table 66.5.3.2.1 shall be permitted to be waived. [**30**:7.3.2.1]*

66.5.3.2.2 Where Class IA liquids or unstable liquids, regardless of class, are handled or processed, the exposing walls shall have explosion resistance in accordance with recognized engineering standards. *(See 7.3.3.7 of NFPA 30 for information on explosion relief of other building walls.)*[**30**:7.3.2.2]

66.5.3.2.3* Other liquid-processing equipment, such as pumps, heaters, filters, and exchangers, shall not be located closer than 25 ft (7.6 m) to property lines where the adjoining property is or can be built upon or to the nearest important building on the same property that is not an integral part of the process. This spacing requirement shall be permitted to be waived where exposures are protected as outlined in 66.5.3.2.1. [**30**:7.3.2.3]

66.5.3.2.4 Processing equipment in which unstable liquids are handled shall be separated from unrelated plant facilities that use or handle liquids by either of the following:

(1) 25 ft (7.6 m) clear spacing
(2) A wall having a fire resistance rating of not less than 2 hours and explosion resistance consistent with the expected hazard [**30**:7.3.2.4]

Table 66.5.3.2.1 Location of Processing Vessels from Property Lines and Nearest Important Building on the Same Property Where Protection for Exposures Is Provided

	Minimum Distance (ft)							
	From Property Line that Is or Can Be Built Upon, Including Opposite Side of Public Way				From Nearest Side of Any Public Way or from Nearest Important Building on Same Property that Is Not an Integral Part of the Process			
	Stable Liquid Emergency Relief		Unstable Liquid Emergency Relief		Stable Liquid Emergency Relief		Unstable Liquid Emergency Relief	
Vessel Maximum Operating Liquid Capacity (gal)	Not Over 2.5 psig	Over 2.5 psig	Not Over 2.5 psig	Over 2.5 psig	Not Over 2.5 psig	Over 2.5 psig	Not Over 2.5 psig	Over 2.5 psig
275 or less	5	10	15	20	5	10	15	20
276 to 750	10	15	25	40	5	10	15	20
751 to 12,000	15	25	40	60	5	10	15	20
12,001 to 30,000	20	30	50	80	5	10	15	20
30,001 to 50,000	30	45	75	120	10	15	25	40
50,001 to 100,000	50	75	125	200	15	25	40	60
Over 100,000	80	120	200	300	25	40	65	100

Notes:
(1) For SI units, 1 gal = 3.8 L; 1 ft = 0.3 m; 1 psig = a gauge pressure of 6.9 kPa.
(2) Double all of above distances where protection for exposures is not provided.
[**30**:Table 7.3.2.1]

66.5.3.2.5 Each process unit or building containing liquid-processing equipment shall be accessible from at least one side for fire fighting and fire control. [**30:**7.3.2.5]

66.5.3.3 Construction.

66.5.3.3.1* Process buildings or structures used for liquid operations shall be constructed consistent with the operations being conducted and with the classes of liquids handled. They shall be constructed in accordance with the requirements of 66.5.3 and in accordance with Table 66.5.3.3.1. [**30:**7.3.3.1]

Table 66.5.3.3.1 Construction of Buildings or Structures Used for Liquid Handling and Operations

	Minimum Separation Distance (ft)		
Liquid Class	To Adjacent Property Line that Is or Can Be Built Upon	To Street, Alley, or Public Way	Minimum Type Construction*
Class I liquids, unstable	50	10	II(000)
liquid of any class, and	25	5	II(111)
liquids of any class heated above their flash points	10	5	II(222)
Class II	25	5	II(000)
	10	5	II(111)
Class III	10	5	II(000)

Notes:
(1) For SI units, 1 ft = 0.3 m.
(2) Distances apply to properties that have protection for exposures, as defined in NFPA 30. If there are exposures for which protection does not exist, the distances shall be doubled.
*Construction types are defined in NFPA 220.
[**30:**Table 7.3.3.1]

66.5.3.3.1.1 Buildings or structures used solely for blending, mixing, or dispensing of Class IIIB liquids at temperatures below their flash points shall be permitted to be constructed of combustible construction, subject to the approval of the AHJ. [**30:**7.3.3.1.1]

66.5.3.3.1.2 Buildings or structures used for processing or handling of liquids where the quantities of liquids do not exceed 360 gal (1360 L) of Class I and Class II liquids and 720 gal (2725 L) of Class III liquids shall be permitted to be constructed of combustible construction, subject to the approval of the AHJ. [**30:**7.3.3.1.2]

66.5.3.3.1.3 Buildings or structures used for processing or handling of liquids protected with automatic sprinklers or equivalent fire protection systems shall be permitted to be constructed of combustible construction, subject to the approval of the AHJ. [**30:**7.3.3.1.3]

66.5.3.3.2* Load-bearing building supports and load-bearing supports of vessels and equipment capable of releasing appreciable quantities of liquids so as to result in a fire of sufficient intensity and duration to cause substantial property damage shall be protected by one or more of the following:

(1) Drainage to a safe location to prevent liquids from accumulating under vessels or equipment
(2) Fire-resistive construction
(3) Fire-resistant protective coatings or systems
(4) Water spray systems designed and installed in accordance with NFPA 15
(5) Other alternate means acceptable to the AHJ [**30:**7.3.3.2]

66.5.3.3.3 Class I liquids shall not be handled or used in basements. Where Class I liquids are handled or used above grade within buildings with basements or closed pits into which flammable vapors can travel, such belowgrade areas shall be provided with mechanical ventilation designed to prevent the accumulation of flammable vapors. Means shall be provided to prevent liquid spills from running into basements. [**30:**7.3.3.3]

66.5.3.3.4* Smoke and heat venting shall be permitted to be used where it assists access for fire fighting. [**30:**7.3.3.4]

66.5.3.3.5* Areas shall have exit facilities arranged to prevent occupants from being trapped in the event of fire. Exits shall not be exposed by the drainage facilities described in 7.3.5 of NFPA 30. [**30:**7.3.3.5]

66.5.3.3.6 Adequate aisles shall be maintained for unobstructed movement of personnel and fire protection equipment. [**30:**7.3.3.6]

66.5.3.3.7* Areas where Class IA or unstable liquids are processed shall be designed to direct flame, combustion gases, and pressures resulting from a deflagration away from important buildings or occupied areas through the use of damage-limiting construction. The damage-limiting construction design shall be in accordance with recognized standards and shall be acceptable to the AHJ. *(See A.6.4.2.4 of NFPA 30.)* [**30:**7.3.3.7]

66.5.3.4 Ventilation.

66.5.3.4.1 Enclosed processing areas handling or using Class I liquids or Class II or Class III liquids, heated to temperatures at or above their flash points, shall be ventilated at a rate sufficient to maintain the concentration of vapors within the area at or below 25 percent of the lower flammable limit. Compliance with 66.5.3.4.2 through 66.5.3.4.5 shall be deemed as meeting the requirements of 66.5.3.4.1. [**30:**7.3.4.1]

66.5.3.4.2* Ventilation requirements shall be confirmed by one of the following:

(1) Calculations based on the anticipated fugitive emissions *(see Annex F of NFPA 30 for calculation method).*
(2) Sampling of the actual vapor concentration under normal operating conditions. The sampling shall be conducted at a 5 ft (1.5 m) radius from each potential vapor source extending to or toward the bottom and the top of the enclosed processing area. The vapor concentration used to determine the required ventilation rate shall be the highest measured concentration during the sampling procedure.

*Exception: Where a ventilation rate of not less than 1 $ft^3/min/ft^2$ (0.3 $m^3/min/m^2$) of solid floor area is provided, the ventilation confirmation requirement of 66.5.3.4.2 shall not apply. [**30:**7.3.4.2]*

66.5.3.4.3 Ventilation shall be accomplished by mechanical or natural exhaust ventilation. Exhaust ventilation discharge shall be to a safe location outside the building, without recirculation of the exhaust air.

Exception: Recirculation is permitted where it is monitored continuously using a fail-safe system that is designed to automatically sound an alarm, stop recirculation, and provide full exhaust to the outside in

the event that vapor–air mixtures in concentrations over one-fourth of the lower flammable limit are detected. [30:7.3.4.3]

66.5.3.4.4* Provision shall be made for introduction of make-up air in such a manner as to avoid short-circuiting the ventilation. Ventilation shall be arranged to include all floor areas or pits where flammable vapors can collect. Local or spot ventilation to control special fire or health hazards, if provided, shall be permitted to be utilized for up to 75 percent of the required ventilation. [30:7.3.4.4]

66.5.3.4.5 Where equipment such as dispensing stations, open centrifuges, plate and frame filters, and open vacuum filters is used in a building, the equipment and ventilation of the building shall be designed to limit flammable vapor–air mixtures under normal operating conditions to the interior of equipment and to not more than 5 ft (1.5 m) from equipment that exposes Class I liquids to the air. [30:7.3.4.5]

66.5.3.5 Drainage.

66.5.3.5.1* Emergency drainage systems shall be provided to direct liquid leakage and fire protection water to a safe location. [30:7.3.5.1]

66.5.3.5.2 Emergency drainage systems, if connected to public sewers or discharged into public waterways, shall be equipped with traps or separators. [30:7.3.5.2]

66.5.3.5.3 A facility shall be designed and operated to prevent the discharge of liquids to public waterways, public sewers, or adjoining property. [30:7.3.5.3]

66.5.3.6 Electrical Equipment. Electrical wiring and utilization equipment shall meet the requirements of Chapter 8 of NFPA 30. [30:7.3.6]

66.5.3.7 Liquid Handling, Transfer, and Use.

66.5.3.7.1 Class I liquids shall be kept in closed tanks or containers when not actually in use. Class II and Class III liquids shall be kept in closed tanks or containers when ambient or process temperature is at or above their flash point. [30:7.3.7.1]

66.5.3.7.2 Where liquids are used or handled, provisions shall be made to promptly and safely dispose of leakage or spills. [30:7.3.7.2]

66.5.3.7.3 Class I liquids shall not be used outside closed systems where there are open flames or other ignition sources within the classified areas set forth in Chapter 8 of NFPA 30. [30:7.3.7.3]

66.5.3.7.4 Transfer of liquids among vessels, containers, tanks, and piping systems by means of air or inert gas pressure shall be permitted only under all of the following conditions:

(1) The vessels, containers, tanks, and piping systems shall be designed for such pressurized transfer and shall be capable of withstanding the anticipated operating pressure.
(2) Safety and operating controls, including pressure-relief devices, shall be provided to prevent overpressure of any part of the system.
(3) Only inert gas shall be used to transfer Class I liquids. Inert gas shall be used to transfer Class II and Class III liquids that are heated above their flash points. [30:7.3.7.4]

66.5.3.7.5 Positive displacement pumps shall be provided with pressure relief discharging back to the tank, pump suction, or other suitable location or shall be provided with interlocks to prevent overpressure. [30:7.3.7.5]

66.5.3.7.6 Piping, valves, and fittings shall be in accordance with Chapter 5 of NFPA 30. [30:7.3.7.6]

66.5.3.7.7 Listed flexible connectors shall be permitted to be used where vibration exists. Approved hose shall be permitted to be used at transfer stations. [30:7.3.7.7]

66.5.3.7.8* The staging of liquids in containers, intermediate bulk containers, and portable tanks shall be limited to the following:

(1) Containers, intermediate bulk containers, and portable tanks that are in use
(2) Containers, intermediate bulk containers, and portable tanks that were filled during a single shift
(3) Containers, intermediate bulk containers, and portable tanks needed to supply the process for one continuous 24-hour period
(4) Containers, intermediate bulk containers, and portable tanks that are stored in accordance with Chapter 6 of NFPA 30. [30:7.3.7.8]

66.5.3.7.9 Intermediate bulk containers and portable tanks that contain Class I, Class II, or Class IIIA liquids used in a process and staged in the process area shall not be filled in the process area.

Exception No. 1: Intermediate bulk containers and portable tanks that meet the requirements of Chapter 6 of NFPA 30.

Exception No. 2: Intermediate products that are manufactured in the process area. [30:7.3.7.9]

66.5.3.8* Equipment. Equipment shall be designed and arranged to prevent the unintentional escape of liquids and vapors and to minimize the quantity escaping in the event of accidental release. [30:7.3.8]

66.5.4 Incidental Operations.

66.5.4.1* Subsection 66.5.4 shall apply to areas where the use, handling, and storage of liquids is only a limited activity to the established occupancy classification. [30:7.5.1]

66.5.4.2 Class I liquids or Class II or Class III liquids that are heated up to or above their flash points shall be drawn from or transferred into vessels, containers, or portable tanks as follows:

(1) From original shipping containers with a capacity of 5.3 gal (20 L) or less
(2) From safety cans
(3) Through a closed piping system
(4) From portable tanks or containers by means of a device that has antisiphoning protection and that draws through an opening in the top of the tank or container
(5) By gravity through a listed self-closing valve or self-closing faucet [30:7.5.2]

66.5.4.2.1 If hose is used in the transfer operation, it shall be equipped with a self-closing valve without a hold-open latch in addition to the outlet valve. Only listed or approved hose shall be used. [30:7.5.2.1]

66.5.4.2.2 Means shall be provided to minimize generation of static electricity. Such means shall meet the requirements of 7.9.4 of NFPA 30. [30:7.5.2.2]

66.5.4.2.3 Where pumps are used for liquid transfer, means shall be provided to deactivate liquid transfer in the event of a liquid spill or fire. [30:7.5.2.3]

66.5.4.3 All storage of liquids shall comply with Chapter 6 of NFPA 30.

*Exception: As provided in 66.5.4.4 and 66.5.4.5. [**30:**7.5.3]*

66.5.4.4 The quantity of liquid located outside of identified storage areas, such as storage cabinets, other inside liquid storage areas, general-purpose warehouses, or other specific processing areas that are cut off from the general plant area by at least a 2-hour fire separation, shall meet the requirements of 66.5.4.4.1. [**30:**7.5.4]

66.5.4.4.1 The aggregate of the sum of all incidental operations in each single fire area shall not exceed the sum of the following:

(1) 25 gal (95 L) of Class IA liquids in containers
(2) 120 gal (454 L) of Class IB, Class IC, Class II, or Class III liquids in containers
(3) 1586 gal (6000 L) of any combination of the following:
  (a) Class IB, IC, II, or IIIA liquids in metal portable tanks or metal intermediate bulk containers, each not exceeding 793 gal (3000 L)
  (b) Class II or Class IIIA liquids in nonmetallic intermediate bulk containers, each not exceeding 793 gal (3000 L)
(4) 20 portable tanks or intermediate bulk containers each not exceeding 793 gal (3000 L) of Class IIIB liquids

*Exception: Where quantities of liquid in excess of the limits in 66.5.4.4.1(1) through 66.5.4.4.1(4) are needed to supply an incidental operation for one continuous 24-hour period, that greater quantity shall be allowed. [**30:**7.5.4.1]*

66.5.4.4.2 Where quantities of liquids in excess of the limits in 66.5.4.4.1 are necessary, storage shall be in tanks that meet all applicable requirements of Chapter 4 and Section 7.3 of NFPA 30. [**30:**7.5.4.2]

66.5.4.5 Areas in which liquids are transferred from one tank or container to another container shall be provided with the following:

(1) Separation from other operations that can represent an ignition source by distance or by fire-resistant construction
(2) Drainage or other means to control spills
(3) *Natural or mechanical ventilation that meets the requirements of 7.3.4 of NFPA 30 [**30:**7.5.5]

66.5.5 Loading and Unloading Operations and Facilities.

66.5.5.1 Subsection 66.5.5 shall apply to operations involving the loading or unloading of tank cars and tank vehicles and the areas in facilities where these operations are conducted. [**30:**7.6.1]

66.5.5.2 Bonding requirements, as specified as follows, shall not be required:

(1) Where tank cars and tank vehicles are loaded exclusively with products that do not have static-accumulating properties, such as asphalts (including cutback asphalts), most crude oils, residual oils, and water-soluble liquids
(2) Where no Class I liquids are handled at the loading facility and where the tank cars and tank vehicles loaded are used exclusively for Class II and Class III liquids
(3) Where tank cars and tank vehicles are loaded or unloaded through closed connections [**30:**7.6.2]

66.5.5.3* Tank vehicle and tank car loading and unloading facilities shall be separated from aboveground tanks, warehouses, other plant buildings, or the nearest line of adjoining property that can be built upon by a distance of at least 25 ft (7.6 m) for Class I liquids and at least 15 ft (4.6 m) for Class II and Class III liquids, measured from the nearest fill spout or transfer connection. These distances shall be permitted to be reduced if there is suitable protection for exposures. Buildings for pumps or shelters for personnel shall be permitted to be a part of the facility. [**30:**7.6.3]

66.5.5.4* Loading and unloading facilities shall be provided with drainage systems or other means to contain spills. [**30:**7.6.4]

66.5.5.5 A loading or unloading facility that has a canopy or roof that does not limit the dissipation of heat or dispersion of flammable vapors and does not restrict fire-fighting access and control shall be treated as an outdoor facility. [**30:**7.6.5]

66.5.5.6* Loading and unloading facilities that are used to load liquids into tank vehicles through open domes shall be provided with a means for electrically bonding to protect against static electricity hazards. Such means shall consist of a metallic bond wire that is permanently electrically connected to the fill pipe assembly or to some part of the rack structure that is in electrical contact with the fill pipe assembly. The free end of this wire shall be provided with a clamp or an equivalent device for convenient attachment to some metallic part that is in electrical contact with the cargo tank of the tank vehicle. All parts of the fill pipe assembly, including the drop tube, shall form a continuous electrically conductive path. [**30:**7.6.6]

66.5.5.7 Tank car facilities where flammable and combustible liquids are loaded or unloaded through open domes shall be protected against stray currents by permanently bonding the fill pipe to at least one rail and to the facility structure, if of metal. Multiple pipelines that enter the area shall be permanently bonded together. In addition, in areas where excessive stray currents are known to exist, all pipelines entering the area shall be provided with insulating sections to electrically isolate them from the facility piping.

*Exception: These precautions shall not be required where only Class II or Class III liquids are handled and where there is no probability that tank cars will contain vapors from previous cargoes of Class I liquids. [**30:**7.6.7]*

66.5.5.8 Equipment such as piping, pumps, and meters used for the transfer of Class I liquids between storage tanks and the fill stem of the loading facility shall not be used for the transfer of Class II or Class III liquids.

Exception No. 1: This provision shall not apply to water-miscible liquid mixtures where the class of the mixture is determined by the concentration of liquid in water.

*Exception No. 2: This provision shall not apply where the equipment is cleaned between transfers. [**30:**7.6.8]*

66.5.5.9 Remote pumps located in underground tanks shall have a listed leak detection device installed on the pump discharge side that will indicate if the piping system is not essentially liquidtight. This device shall be checked and tested at least annually according to the manufacturer's specifications to ensure proper installation and operation. [**30:**7.6.9]

66.5.5.10 Loading and Unloading of Tank Vehicles.

66.5.5.10.1 Liquids shall be loaded only into cargo tanks whose material of construction is compatible with the chemical characteristics of the liquid. The liquid being loaded shall also be chemically compatible with the liquid hauled on the previous load unless the cargo tank has been cleaned. [**30:**7.6.10.1]

66.5.5.10.2 Before loading tank vehicles through open domes, a bonding connection shall be made to the vehicle or tank before dome covers are raised and shall remain in place until filling is completed and all dome covers have been closed and secured.

Exception: As modified by 7.6.2 of NFPA 30. [30:7.6.10.2]

66.5.5.10.3 When transferring Class I liquids, engines of tank vehicles or motors of auxiliary or portable pumps shall be shut down during making and breaking hose connections. If loading or unloading is done without requiring the use of the motor of the tank vehicle, the motor shall be shut down throughout any transfer operations involving Class I liquids. [30:7.6.10.3]

66.5.5.10.4* Filling through open domes into the tank cars that contain vapor–air mixtures within the flammable range or where the liquid being filled can form such a mixture shall be by means of a downspout that extends to within 6 in. (150 mm) of the bottom of the tank. This precaution shall not be required when loading liquids that are not accumulators of static electric charges. [30:7.6.10.4]

66.5.5.10.5 When top loading a tank vehicle with Class I or Class II liquids without a vapor control system, valves used for the final control of flow shall be of the self-closing type and shall be manually held open except where automatic means are provided for shutting off the flow when the vehicle is full. Automatic shutoff systems shall be provided with a manual shutoff valve located at a safe distance from the loading nozzle to stop the flow if the automatic system fails. When top loading a tank vehicle with vapor control, flow control shall be in accordance with 66.5.5.10.7 and 66.5.5.10.8. [30:7.6.10.5]

66.5.5.10.6 When bottom loading a tank vehicle, a positive means shall be provided for loading a predetermined quantity of liquid, together with a secondary automatic shutoff control to prevent overfill. The connecting components between the loading rack and the tank vehicle that are required to operate the secondary control shall be functionally compatible. The connection between the liquid loading hose or pipe and the truck piping shall be by means of a dry disconnect coupling. [30:7.6.10.6]

66.5.5.10.7 When bottom loading a tank vehicle that is equipped for vapor control, but when vapor control is not used, the tank shall be vented to the atmosphere, at a height not lower than the top of the cargo tank of the vehicle, to prevent pressurization of the tank. Connections to the facility's vapor control system shall be designed to prevent the escape of vapor to the atmosphere when not connected to a tank vehicle. [30:7.6.10.7]

66.5.5.10.8 When bottom loading is used, reduced flow rates (until the fill opening is submerged), splash deflectors, or other devices shall be used to prevent splashing and to minimize turbulence. [30:7.6.10.8]

66.5.5.10.9 Metal or conductive objects, such as gauge tapes, sample containers, and thermometers, shall not be lowered into or suspended in a compartment while the compartment is being filled or immediately after cessation of pumping to permit the relaxation of charge. [30:7.6.10.9]

66.5.5.11 Loading and Unloading of Tank Cars.

66.5.5.11.1 Liquids shall be loaded only into tank cars whose material of construction is compatible with the chemical characteristics of the liquid. The liquid being loaded shall also be chemically compatible with the liquid hauled on the previous load unless the tank car has been cleaned. [30:7.6.11.1]

66.5.5.11.2* Filling through open domes into the tanks of tank vehicles that contain vapor–air mixtures within the flammable range, or where the liquid being filled can form such a mixture, shall be by means of a downspout that extends to within 6 in. (150 mm) of the bottom of the tank. This precaution shall not be required when loading liquids that are not accumulators of static electric charges. [30:7.6.11.2]

66.5.5.11.3 When bottom loading is used, reduced flow rates (until the fill opening is submerged), splash deflectors, or other devices shall be used to prevent splashing and to minimize turbulence. [30:7.6.11.3]

66.5.5.11.4 Metal or conductive objects, such as gauge tapes, sample containers, and thermometers, shall not be lowered into or suspended in a compartment while the compartment is being filled or immediately after cessation of pumping to permit the relaxation of charge. [30:7.6.11.4]

66.5.5.12* Switch Loading. To prevent hazards due to a change in flash point of liquids, no tank car or tank vehicle that has previously contained a Class I liquid shall be loaded with a Class II or Class III liquid unless proper precautions are taken. [30:7.6.12]

66.5.6 Control of Ignition Sources.

66.5.6.1 General. Precautions shall be taken to prevent the ignition of flammable vapors by sources such as the following:

(1) Open flames
(2) Lightning
(3) Hot surfaces
(4) Radiant heat
(5) Smoking
(6) Cutting and welding
(7) Spontaneous ignition
(8) Frictional heat or sparks
(9) Static electricity
(10) Electrical sparks
(11) Stray currents
(12) Ovens, furnaces, and heating equipment [30:7.9.1]

66.5.6.2 Smoking. Smoking shall be permitted only in designated and properly identified areas. [30:7.9.2]

66.5.6.3* Hot Work. Welding, cutting, and similar spark-producing operations shall not be permitted in areas containing flammable liquids until a written permit authorizing such work has been issued. The permit shall be issued by a person in authority following his/her inspection of the area to assure that proper precautions have been taken and will be followed until the job is completed. [30:7.9.3]

66.5.6.4* Static Electricity. All equipment such as tanks, machinery, and piping shall be designed and operated to prevent electrostatic ignitions. [30:7.9.4]

66.5.6.4.1 All metallic equipment such as tanks, machinery, and piping where an ignitable mixture could be present shall be bonded or grounded. The bond or ground or both shall be physically applied or shall be inherently present by the nature of the installation. Any electrically isolated section of metallic piping or equipment shall be bonded or grounded to prevent hazardous accumulation of static electricity. [30:7.9.4.1]

66.5.6.4.2 Nonmetallic equipment and piping shall be designed to provide equivalent safeguards against static electricity. [30:7.9.4.2]

66.5.6.5 Electrical Installations. Electrical equipment and wiring installations shall be in accordance with Chapter 8 of NFPA 30. [30:7.9.5]

66.5.7 Solvent Distillation Units.

66.5.7.1 Scope.

66.5.7.1.1 Subsection 66.5.7 shall apply to solvent distillation units having distillation chambers or still pots that do not exceed 60 gal (230 L) nominal capacity and are used to recycle Class I, Class II, and Class IIIA liquids. [**30:**7.11.1.1]

66.5.7.1.2 Subsection 66.5.7 shall not apply to research, testing, or experimental processes; to distillation processes carried out in petroleum refineries, chemical plants, or distilleries; or to distillation equipment used in dry cleaning operations. [**30:**7.11.1.2]

66.5.7.2 Equipment. Solvent distillation units shall be approved or shall be listed in accordance with UL 2208, *Standard for Solvent Distillation Units.* [**30:**7.11.2]

66.5.7.3 Solvents. Solvent distillation units shall only be used to distill liquids for which they have been investigated and which are indicated on the unit's marking or instruction manual. Unstable or reactive liquids or materials shall not be processed unless they have been specifically indicated on the system's markings or in the instruction manual. [**30:**7.11.3]

66.5.7.4 Location. Solvent distillation units shall only be used in locations in accordance with their approval or listing. They shall not be used in basements. They shall be located away from potential sources of ignition, as indicated on the unit's marking. [**30:**7.11.4]

66.5.7.5 Liquid Storage. Distilled liquids and liquids awaiting distillation shall be stored in accordance with Chapter 1 through Chapter 6 of NFPA 30. [**30:**7.11.5]

66.5.8 Management of Fire Hazards.

66.5.8.1 Subsection 66.5.8 shall apply to the management methodology used to identify, evaluate, and control the hazards involved in processing and handling of flammable and combustible liquids. Theses hazards include, but are not limited to, preparation, separation, purification, and change of state, energy content, or composition. [**30:**7.12.1]

66.5.8.2 Operations involving flammable and combustible liquids shall be reviewed to ensure that fire and explosion hazards resulting from loss of containment of liquids are provided with corresponding fire prevention and emergency action plans.

Exception No. 1: Operations where liquids are used solely for on-site consumption as fuels.

Exception No. 2: Operations where Class II or Class III liquids are stored in atmospheric tanks or transferred at temperatures below their flash points.

Exception No. 3: Mercantile occupancies, crude petroleum exploration, drillings, and well servicing operations, and normally unoccupied facilities in remote locations. [30:7.12.2]

66.5.8.3 The extent of fire prevention and control that is provided shall be determined by means of an engineering evaluation of the operation and application of sound fire protection and process engineering principles. This evaluation shall include, but not be limited to, the following:

(1) Analysis of the fire and explosion hazards of the operation
(2) Analysis of emergency relief from process vessels, taking into consideration the properties of the materials used and the fire protection and control measures taken
(3) Analysis of applicable facility design requirements in Section 7.3 through Section 7.7 of NFPA 30
(4) Analysis of applicable requirements for liquid handling, transfer, and use, as covered in Section 7.3 through Section 7.7 of NFPA 30
(5) Analysis of local conditions, such as exposure to and from adjacent properties and exposure to floods, earthquakes, and windstorms
(6) Analysis of the emergency response capabilities of the local emergency services [**30:**7.12.3]

66.5.8.4 A written emergency action plan that is consistent with available equipment and personnel shall be established to respond to fires and related emergencies. This plan shall include the following:

(1) Procedures to be followed in case of fire, such as sounding the alarm, notifying the fire department, evacuating personnel, and controlling and extinguishing the fire.
(2) Procedures and schedules for conducting drills of these procedures.
(3) Appointment and training of personnel to carry out assigned duties. These duties shall be reviewed at the time of initial assignment, as responsibilities or response actions change, and whenever anticipated duties change.
(4) Maintenance of fire protection equipment.
(5) Procedures for shutting down or isolating equipment to reduce the release of liquid. This shall include assigning personnel responsible for maintaining critical plant functions or shutdown of plant processes.
(6) Alternate measures for the safety of occupants. [**30:**7.12.4]

66.5.8.5 The fire hazards management review conducted in accordance with 66.5.8.2 shall be repeated whenever the hazards leading to a fire or explosion change significantly. Conditions that might require repeating a review shall include, but are not limited to, the following:

(1) When changes occur in the materials in process
(2) When changes occur in process equipment
(3) When changes occur in process control
(4) When changes occur in operating procedures or assignments [**30:**7.12.5]

66.5.9 Fire Protection and Fire Suppression.

66.5.9.1 General.

66.5.9.1.1* Subsection 66.5.9 shall cover the commonly recognized management control systems and methods used to prevent or minimize the loss from fire or explosion in liquid-processing facilities. [**30:**7.13.1.1]

66.5.9.1.2* The AHJ shall be consulted on specific cases or qualified engineering judgment shall be exercised. [**30:**7.13.1.2]

66.5.9.2 Portable Fire Control Equipment.

66.5.9.2.1* Listed portable fire extinguishers shall be provided for facilities in such quantities, sizes, and types as could be needed for the special hazards of operation and storage. [**30:**7.13.2.1]

66.5.9.2.2 When the need is indicated in accordance with 7.12.3 of NFPA 30, standpipe and hose systems, installed in accordance with NFPA 14, or hose connections from sprinkler systems using combination spray and straight stream nozzles, installed in accordance with NFPA 13, shall be used. [**30:**7.13.2.2]

66.5.9.2.3 When the need is indicated in accordance with 7.12.3 of NFPA 30 mobile foam apparatus shall be provided. [**30:**7.13.2.3]

66.5.9.2.4 Automotive and trailer-mounted fire apparatus, where determined necessary, shall not be used for any purpose other than fire fighting. [30:7.13.2.4]

66.5.9.3 Fixed Fire Control Equipment.

66.5.9.3.1 A reliable water supply or other suitable fire control agent shall be available in pressure and quantity to meet the fire demands indicated by the special hazards of operation, storage, or exposure. [30:7.13.3.1]

66.5.9.3.2* Permanent connections between the fire water system and any process system shall be prohibited to prevent contamination of fire water with process fluids. [30:7.13.3.2]

66.5.9.3.3* Hydrants, with or without fixed monitor nozzles, shall be provided in accordance with accepted practice. The number and placement shall depend on the hazard of the liquid-processing facility. [30:7.13.3.3]

66.5.9.3.4* Where the need is indicated by the hazards of liquid processing, storage, or exposure as determined by 7.12.3 of NFPA 30 fixed protection shall be provided by means of approved sprinkler systems, water spray systems, deluge systems, fire-resistive materials, or a combination of these. [30:7.13.3.4]

66.5.9.3.5 Where provided, fire control systems shall be designed, installed, and maintained in accordance with the following NFPA standards:

(1) NFPA 11, *Standard for Low-, Medium-, and High-Expansion Foam*
(2) NFPA 12, *Standard on Carbon Dioxide Extinguishing Systems*
(3) NFPA 12A, *Standard on Halon 1301 Fire Extinguishing Systems*
(4) NFPA 16, *Standard for the Installation of Foam-Water Sprinkler and Foam-Water Spray Systems*
(5) NFPA 17, *Standard for Dry Chemical Extinguishing Systems* [30:7.13.3.5]

66.5.9.4 Detection and Alarm.

66.5.9.4.1* An approved means for prompt notification of fire or emergency to those within the plant and to the available public or mutual aid fire department shall be provided. [30:7.13.4.1]

66.5.9.4.2 Those areas, including buildings, where a potential exists for a flammable liquid spill shall be monitored as appropriate. Some methods shall include the following:

(1) Personnel observation or patrol
(2) Process-monitoring equipment that would indicate a spill or leak could have occurred
(3) Provision of gas detectors to continuously monitor the area where facilities are unattended [30:7.13.4.2]

66.5.9.5 Emergency Planning and Training.

66.5.9.5.1 Personnel responsible for the use and operation of fire protection equipment shall be trained in the use of that equipment. Refresher training shall be conducted at least annually. [30:7.13.5.1]

66.5.9.5.2 Planning of effective fire control measures shall be coordinated with local emergency response agencies. [30:7.13.5.2]

66.5.9.5.3 Procedures shall be established to provide for safe shutdown of operations under emergency conditions. Provisions shall be made for periodic training, inspection, and testing of associated alarms, interlocks, and controls. [30:7.13.5.3]

66.5.9.5.4 The emergency procedure shall be kept readily available in an operating area and updated regularly. [30:7.13.5.4]

66.5.9.5.5 Where premises are likely to be unattended for considerable periods of time, a summary of the emergency plan shall be posted or located in a strategic and accessible location. [30:7.13.5.5]

66.5.9.6 Inspection and Maintenance.

66.5.9.6.1 All fire protection equipment shall be properly maintained, and periodic inspections and tests shall be done in accordance with both standard practice and the equipment manufacturer's recommendations. Water-based fire protection systems shall be inspected, tested, and maintained in accordance with NFPA 25. [30:7.13.6.1]

66.5.9.6.2 Maintenance and operating practices shall control leakage and prevent spillage of flammable liquids. [30:7.13.6.2]

66.5.9.6.3 Combustible waste material and residues in operating areas shall be kept to a minimum, stored in covered metal containers, and disposed of daily. [30:7.13.6.3]

66.5.9.6.4 Ground areas around facilities where liquids are stored, handled, or used shall be kept free of weeds, trash, or other unnecessary combustible materials. [30:7.13.6.4]

66.5.9.6.5 Aisles established for movement of personnel shall be maintained clear of obstructions to permit orderly evacuation and ready access for manual fire-fighting activities. [30:7.13.6.5]

66.6 Electrical Equipment and Installations.

66.6.1 Scope. Section 66.6 shall apply to areas where Class I liquids are stored or handled and to areas where Class II or Class III liquids are stored or handled at or above their flash points. [30:8.1]

66.6.2 General. Any electrical equipment provided shall not constitute a source of ignition for the flammable vapor that might be present under normal operation or during a spill. Compliance with 66.6.2.1 through 66.6.2.4 shall be deemed as meeting the requirements of 66.6.2. [30:8.2]

66.6.2.1 All electrical equipment and wiring shall be of a type specified by and installed in accordance with NFPA 70. [30:8.2.1]

66.6.2.2* So far as it applies, Table 66.6.2.2 shall be used to delineate and classify areas for the purpose of installation of electrical equipment under normal conditions. In the application of classified areas, a classified area shall not extend beyond a floor, wall, roof, or other solid partition that has no openings within the classified area. The designation of classes, divisions, and zones shall be as defined in NFPA 70, Chapter 5, Article 500. [30:8.2.2]

66.6.2.3 The area classifications listed in Table 66.6.2.2 are based on the premise that the installation shall meet the applicable requirements of this *Code* in all respects. Should this not be the case, the AHJ shall have the authority to classify the extent of the area. [30:8.2.3]

66.6.2.4* Where the provisions of 66.6.2.1 through 66.6.2.4 require the installation of electrical equipment suitable for Class I, Division 1 or 2 or Zone 1 or 2 locations, ordinary electrical equipment, including switchgear, shall be permitted to be used if installed in a room or enclosure that is maintained under positive pressure with respect to the classified area. Ventilation make-up air shall not be contaminated. [30:8.2.4]

66.7* Handling Underground Releases of Flammable and Combustible Liquids. Handling of a suspected escape of flammable or combustible liquid shall be conducted by a meansacceptable to the AHJ.

Table 66.6.2.2 Electrical Area Classifications

Location	*NEC* Class I Division	*NEC* Class I Zone	Extent of Classified Area
Indoor equipment installed in accordance with Section 7.3 of NFPA 30 where flammable vapor–air mixtures can exist under normal operation	1	0	The entire area associated with such equipment where flammable gases or vapors are present continuously or for long periods of time
	1	1	Area within 5 ft (1.5 m) of any edge of such equipment, extending in all directions
	2	2	Area between 5 ft and 8 ft (1.5 m and 2.4 m) of any edge of such equipment, extending in all directions; also, space up to 3 ft (0.9 m) above floor or grade level within 5 ft to 25 ft (1.5 m to 7.6 m) horizontally from any edge of such equipment*
Outdoor equipment of the type covered in Section 7.3 of NFPA 30 where flammable vapor–air mixtures can exist under normal operation	1	0	The entire area associated with such equipment where flammable gases or vapors are present continuously or for long periods of time
	1	1	Area within 3 ft (0.9 m) of any edge of such equipment, extending in all directions
	2	2	Area between 3 ft and 8 ft (0.9 m to 2.4 m) of any edge of such equipment, extending in all directions; also, space up to 3 ft (0.9 m) above floor or grade level within 3 ft to 10 ft (0.9 m to 3 m) horizontally from any edge of such equipment
Tank storage installations inside buildings	1	1	All equipment located below grade level
Tank — aboveground	2	2	Any equipment located at or above grade level
	1	0	Inside fixed-roof tank
	1	1	Area inside dike where dike height is greater than the distance from the tank to the dike for more than 50 percent of the tank circumference
Shell, ends, or roof and dike area	2	2	Within 10 ft (3 m) from shell, ends, or roof of tank; also, area inside dike up to top of dike wall
Vent	1	0	Area inside of vent piping or opening
	1	1	Within 5 ft (1.5 m) of open end of vent, extending in all directions
	2	2	Area between 5 ft and 10 ft (1.5 m and 3 m) from open end of vent, extending in all directions
Floating roof			
With fixed outer roof	1	0	Area between the floating and fixed-roof sections and within the shell
With no fixed outer roof	1	1	Area above the floating roof and within the shell
Underground tank fill opening	1	1	Any pit, box, or space below grade level, if any part is within a Division 1 or 2 or Zone 1 or 2 classified location
	2	2	Up to 18 in. above grade level within a horizontal radius of 10 ft (3 m) from a loose fill connection and within a horizontal radius of 5 ft (1.5 m) from a tight fill connection
Vent — discharging upward	1	0	Area inside of vent piping or opening
	1	1	Within 3 ft (0.9 m) of open end of vent, extending in all directions
	2	2	Area between 3 ft and 5 ft (0.9 m and 1.5 m) of open end of vent, extending in all directions
Tank Vault — Interior	1	1	Entire interior volume, if Class I liquids are stored within

Table 66.6.2.2 *Continued*

Location	*NEC* Class I Division	*NEC* Class I Zone	Extent of Classified Area
Drum and container filling — outdoors or indoors	1	0	Area inside the drum or container
	1	1	Within 3 ft (0.9 m) of vent and fill openings, extending in all directions
	2	2	Area between 3 ft and 5 ft (0.9 m and 1.5 m) from vent or fill opening, extending in all directions; also, up to 18 in. (458 mm) above floor or grade level within a horizontal radius of 10 ft (3 m) from vent or fill opening
Pumps, bleeders, withdrawal fittings			
Indoor	2	2	Within 5 ft (1.5 m) of any edge of such devices, extending in all directions; also, up to 3 ft (0.9 m) above floor or grade level within 25 ft (7.6 m) horizontally from any edge of such devices
Outdoor	2	2	Within 3 ft (0.9 m) of any edge of such devices, extending in all directions; also, up to 18 in. (458 mm) above grade level within 10 ft (3 m) horizontally from any edge of such devices
Pits and sumps			
Without mechanical ventilation	1	1	Entire area within a pit or sump if any part is within a Division 1 or 2 or Zone 1 or 2 classified location
With adequate mechanical ventilation	2	2	Entire area within a pit or sump if any part is within a Division 1 or 2 or Zone 1 or 2 classified location
Containing valves, fittings, or piping, and not within a Division 1 or 2 or Zone 1 or 2 classified location	2	2	Entire pit or sump
Drainage ditches, separators, impounding basins			
Outdoor	2	2	Area up to 18 in. (458 mm) above ditch, separator, or basin; also, area up to 18 in. (458 mm) above grade within 15 ft (4.6 m) horizontally from any edge
Indoor			Same classified area as pits
Tank vehicle and tank car†			
Loading through open dome	1	0	Area inside of the tank
	1	1	Within 3 ft (0.9 m) of edge of dome, extending in all directions
	2	2	Area between 3 ft and 15 ft (0.9 m and 4.6 m) from edge of dome, extending in all directions
Loading through bottom connections with atmospheric venting	1	0	Area inside of the tank
	1	1	Within 3 ft (0.9 m) of point of venting to atmosphere, extending in all directions
	2	2	Area between 3 ft and 15 ft (0.9 m and 4.6 m) from point of venting to atmosphere, extending in all directions; also, up to 18 in. (458 mm) above grade within a horizontal radius of 10 ft (3 m) from point of loading connection
Office and rest rooms	Ordinary		If there is any opening to these rooms within the extent of an indoor classified location, the room shall be classified the same as if the wall, curb, or partition did not exist

(continues)

Table 66.6.2.2 *Continued*

Location	*NEC* Class I Division	*NEC* Class I Zone	Extent of Classified Area
Loading through closed dome with atmospheric venting	1	1	Within 3 ft (0.9 m) of open end of vent, extending in all directions
	2	2	Area between 3 ft and 15 ft (0.9 m and 4.6 m) from open end of vent, extending in all directions; also, within 3 ft (0.9 m) of edge of dome, extending in all directions
Loading through closed dome with vapor control	2	2	Within 3 ft (0.9 m) of point of connection of both fill and vapor lines, extending in all directions
Bottom loading with vapor control or any bottom unloading	2	2	Within 3 ft (0.9 m) of point of connections, extending in all directions; also, up to 18 in. (458 mm) above grade within a horizontal radius of 10 ft (3 m) from point of connections
Storage and repair garage for tank vehicles	1	1	All pits or spaces below floor level
	2	2	Area up to 18 in. (458 mm) above floor or grade level for entire storage or repair garage
Garages for other than tank vehicles	Ordinary		If there is any opening to these rooms within the extent of an outdoor classified location, the entire room shall be classified the same as the area classification at the point of the opening
Outdoor drum storage	Ordinary		
Inside rooms or storage lockers used for the storage of Class I liquids	2	2	Entire room
Indoor warehousing where there is no flammable liquid transfer	Ordinary		If there is any opening to these rooms within the extent of an indoor classified location, the room shall be classified the same as if the wall, curb, or partition did not exist
Piers and wharves			See Figure 7.7.16 of NFPA 30

Note: For SI units, 1 in. = 25 mm; 1 ft = 0.3 m.
*The release of Class I liquids can generate vapors to the extent that the entire building, and possibly an area surrounding it, should be considered a Class I, Division 2, or Zone 2 location.
†When classifying extent of area, consideration shall be given to the fact that tank cars or tank vehicles can be spotted at varying points. Therefore, the extremities of the loading or unloading positions shall be used.
[**30**:Table 8.2.2]

Chapter 67 Flammable Solids

67.1 General. The storage, use, and handling of flammable solids shall comply with the requirements of Chapter 60. The storage, use, and handling of flammable solids in amounts exceeding the maximum allowable quantity permitted in control areas as set forth in Chapter 60 shall also comply with the requirements of Chapter 67.

67.2 Outdoor Storage.

67.2.1 Location. The outdoor storage area for flammable solids shall not be located within 20 ft (6.1 m) of any building, property line, street, alley, public way, or means of egress to a public way, except as provided in 67.2.2.

67.2.2 Distance Reduction. An unpierced 2-hour fire-resistive wall extending not less than 30 in. (76 cm) above and to the sides of the storage area shall be permitted in lieu of the distance specified in 67.2.1.

67.2.3 Pile Size Limit. Flammable solids stored outdoors shall be separated into piles, not larger than 5000 ft^3 (141 m^3).

67.2.4 Aisles. Aisle widths between piles shall not be less than one-half the height of the piles or 10 ft (3 m), whichever is greater.

Chapter 68 Highly Toxic and Toxic Solids and Liquids

68.1 General. The storage, use, and handling of highly toxic and toxic solids and liquids shall comply with Chapter 60. The storage, use, and handling of highly toxic and toxic solids and liquids in amounts exceeding the maximum allowable quantity permitted in control areas as set forth in Chapter 60 shall also comply with the requirements of Chapter 68.

68.2 Indoor Storage. Highly toxic solids and liquids not stored in approved hazardous materials storage cabinets shall be isolated from other hazardous materials storage by a 1-hour rated fire barrier.

68.3 Outdoor Storage.

68.3.1 Location. The outdoor storage area for highly toxic or toxic solids and liquids shall not be within 20 ft (6.1 m) of buildings, property lines, streets, alleys, public ways, or means of egress to a public way, except as provided in 68.3.2.

68.3.2 Distance Reduction. An unpierced 2-hour fire-resistive wall extending not less than 30 in. (76 cm) above and to the sides of the storage area shall be permitted in lieu of the distance specified in 68.3.1.

68.3.3 Clearance from Combustibles. The area surrounding outdoor storage areas or tanks shall be kept clear of combustible materials and vegetation for a minimum distance of 30 ft (9.1 m).

68.3.4 Fire-Extinguishing Systems. The outdoor storage area for highly toxic solids and liquids shall consist of fire-resistive containers or shall comply with one of the following:

(1) The storage area shall be protected by an automatic, open head, deluge fire sprinkler system in accordance with NFPA 13.
(2) Storage shall be located under a noncombustible weather protection structure in accordance with 60.1.2.21, with the canopied area protected by an automatic fire sprinkler system in accordance with NFPA 13.

68.3.5 Storage Arrangement.

68.3.5.1 Pile Size Limit. Highly toxic solids and liquids stored outdoors shall be separated into piles, each not larger than 2500 ft^3 (70.79 m^3).

68.3.5.2 Aisles. Aisle widths between piles shall not be less than one-half the height of the pile or 10 ft (3 m), whichever is greater.

68.3.6 Treatment System.

68.3.6.1 The storage area for highly toxic liquids that liberate highly toxic vapors in the event of a spill or other accidental discharge shall not be located outside of a building unless effective collection and treatment systems are provided.

68.3.6.2 The treatment system shall comply with the design requirements of NFPA 55 for highly toxic gases.

Chapter 69 Liquefied Petroleum Gases and Liquefied Natural Gases

69.1 General Provisions.

69.1.1* Application.

69.1.1.1 The storage, use, and handling of liquefied petroleum gases (LP-Gas) shall comply with the requirements of this chapter; NFPA 58, *Liquefied Petroleum Gas Code*; and Sections 60.1 and 60.2 of this *Code*.

69.1.1.2 Where the provisions of Chapter 69 or NFPA 58 conflict with the provisions of Chapter 60, the provisions of this chapter and NFPA 58 shall apply.

69.1.1.3 Plans for stationary installations utilizing storage containers of over 2000 gal (7.6 m^3) individual water capacity, or with aggregate water capacity exceeding 4000 gal (15.1 m^3), and all rooftop installations of ASME containers shall be submitted to the AHJ by the person or company that either installs or contracts to have the containers installed before the installation is started. *[See also 6.17.11.1(F) of NFPA 58.]* [58:4.3.1]

69.1.2 Permits. Permits, where required, shall comply with Section 1.12.

69.2 LP-Gas Equipment and Appliances.

69.2.1 Containers.

69.2.1.1 General.

69.2.1.1.1* Containers shall be designed, fabricated, tested, and marked (or stamped) in accordance with the regulations of the U.S. Department of Transportation (DOT), the ASME *Boiler and Pressure Vessel Code*, Section VIII, "Rules for the Construction of Unfired Pressure Vessels," or the API-ASME *Code for Unfired Pressure Vessels for Petroleum Liquids and Gases*, except for UG-125 through UG-136. [58:5.2.1.1]

69.2.1.1.1.1 Adherence to applicable ASME Code case interpretations and addenda that have been adopted and published by ASME 180 calendar days prior to the effective date of NFPA 58 shall be considered as compliant with the ASME Code. [58:5.2.1.1(A)]

69.2.1.1.1.2 Containers fabricated to earlier editions of regulations, rules, or codes listed in 69.2.1.1.1 and of the Interstate Commerce Commission (ICC) *Rules for Construction of Unfired Pressure Vessels*, prior to April 1, 1967, shall be permitted to be continued to be used in accordance with Section 1.4 of NFPA 58. [58:5.2.1.1(B)]

69.2.1.1.2 Containers that have been involved in a fire and show no distortion shall be requalified for continued service before being used or reinstalled. [58:5.2.1.2]

69.2.1.1.2.1 Cylinders shall be requalified by a manufacturer of that type of cylinder or by a repair facility approved by DOT. [58:5.2.1.2(A)]

69.2.1.1.2.2 ASME or API-ASME containers shall be retested using the hydrostatic test procedure applicable at the time of the original fabrication. [58:5.2.1.2(B)]

69.2.1.1.2.3 All container appurtenances shall be replaced. [58:5.2.1.2(C)]

69.2.1.1.3 ASME paragraph U-68 or U-69 containers shall be permitted to be continued in use, installed, reinstalled, or placed back into service. Installation of containers shall be in accordance with all provisions listed in NFPA 58. *(See Section 5.2, Table 5.2.4.2 and Table 5.7.2.4(A), and Annex D of NFPA 58.)* [58:5.2.1.3]

69.2.1.1.4 Containers that show excessive denting, bulging, gouging, or corrosion shall be removed from service. [58:5.2.1.4]

69.2.1.1.5 Repairs or alteration of a container shall comply with the regulations, rules, or code under which the container was fabricated. Repairs or alteration to ASME containers shall be in accordance with the *National Board Inspection Code*. [58:5.2.1.5]

69.2.1.1.6 Field welding shall be permitted only on saddle plates, lugs, pads, or brackets that are attached to the container by the container manufacturer. [58:5.2.1.6]

69.2.1.1.7 Containers for general use shall not have individual water capacities greater than 120,000 gal (454 m^3). [58:5.2.1.7]

69.2.1.1.8 Containers in dispensing stations not located in LP-Gas bulk plants, industrial plants, or industrial applications shall have an aggregate water capacity not greater than 30,000 gal (114 m^3). [58:5.2.1.8]

69.2.1.1.9 Heating or cooling coils shall not be installed inside storage containers. [58:5.2.1.9]

69.2.1.2 Portable Container Appurtenance Physical Damage Protection.

69.2.1.2.1 Cylinders of 1000 lb (454 kg) water capacity [nominal 420 lb (191 kg) LP-Gas capacity] or less shall incorporate protection against physical damage to cylinder appurtenances and immediate connections to such appurtenances when not in use by either of the following means:

(1) A ventilated cap
(2) A ventilated collar [58:5.2.6.1]

69.2.1.2.2 Protection of appurtenances of portable containers, skid tanks, and tanks for use as cargo tanks of more than 1000 lb (454 kg) water capacity [nominal 420 lb (191 kg) LP-Gas capacity] shall comply with 69.2.1.2.2.1 through 69.2.1.2.2.3. [58:5.2.6.2]

69.2.1.2.2.1 Appurtenance protection from physical damage shall be provided by recessing, by protective housings, or by location on the vehicle. [58:5.2.6.2(A)]

69.2.1.2.2.2 Appurtenance protection shall comply with the provisions under which the containers are fabricated. [58:5.2.6.2(B)]

69.2.1.2.2.3 Appurtenance protection shall be designed to withstand static loadings in any direction equal to twice the weight of the container and attachments when filled with LP-Gas, using a minimum safety factor of 4, based on the ultimate strength of the material used. [58:5.2.6.2(C)]

69.2.1.3 Containers with Attached Supports.

69.2.1.3.1 Vertical ASME containers of over 125 gal (0.5 m^3) water capacity for use in permanent installations in stationary service shall be designed with steel supports that allow the container to be mounted on and fastened to concrete foundations or supports. [58:5.2.7.1]

69.2.1.3.1.1 Steel supports shall be designed to make the container self-supporting without guy wires and to withstand the wind and seismic (earthquake) forces anticipated at the site. [58:5.2.7.1(A)]

69.2.1.3.1.2 Steel supports shall be protected against fire exposure with a material having a fire resistance rating of at least 2 hours. [58:5.2.7.1(B)]

69.2.1.3.1.3 Continuous steel skirts having only one opening of 18 in. (460 m) or less in diameter shall have 2-hour fire protection applied to the outside of the skirt. [58:5.2.7.1(C)]

69.2.1.3.2 ASME containers to be used as portable storage containers including movable fuel storage tenders and farm carts for temporary stationary service (normally not more than 12 months duration at any location) shall comply with 69.2.1.3.2.1 through 69.2.1.3.2.4. [58:5.2.7.2]

69.2.1.3.2.1 Steel legs or supports shall be either welded to the container by the manufacturer at the time of fabrication or attached to lugs that have been welded to the container. [58:5.2.7.2(A)]

69.2.1.3.2.2 The legs or supports or the lugs for the attachment of legs or supports shall be secured to the container in accordance with NFPA 58 or rule under which the container was designed and built, using a minimum safety factor of 4, to withstand loading in any direction equal to twice the weight of the empty container and attachments. [58:5.2.7.2(B)]

69.2.1.3.2.3 The attachment of a container to either a trailer or semi-trailer running gear, or the attachments to the container to make it a vehicle, so that the unit can be moved by a conventional over-the-road tractor, shall comply with the DOT requirements for cargo tank service. The stress calculations for the design of the attachment shall be based on twice the weight of the empty container. [58:5.2.7.2(C)]

69.2.1.3.2.4 The unit shall be approved by the AHJ. [58:5.2.7.2(D)]

69.2.1.3.3 Portable tank design and construction, securing of skids or lugs for the attachment of skids, and protection of fittings shall be in accordance with DOT portable tank specifications. The bottom of the skids shall be not less than 2 in. (50 mm) or more than 12 in. (300 mm) below the outside bottom of the tank shell. [58:5.2.7.3]

69.2.1.3.4 Movable fuel storage tenders, including farm carts, shall be secured to the trailer support structure for the service involved. [58:5.2.7.4]

69.2.1.4 Container Marking.

69.2.1.4.1 Cylinders shall be marked as provided in the regulations, rules, or code under which they are fabricated. [58:5.2.8.1]

69.2.1.4.1.1 Where LP-Gas and one or more other compressed gases are to be stored or used in the same area, the cylinders shall be marked "Flammable" and either "LP-GAS," "Propane," or "Butane," or shall be marked in accordance with the requirements of 49 CFR, "Transportation." [58:5.2.8.1(A)]

69.2.1.4.1.2 When being transported, cylinders shall be marked and labeled in accordance with 49 CFR, "Transportation." [58:5.2.8.1(B)]

69.2.1.4.2* Cylinders shall be marked with the following information:

(1) The water capacity of the cylinder in pounds
(2) The tare weight of the cylinder in pounds, fitted for service [58:5.2.8.2]

69.2.1.4.3* The markings specified for ASME containers shall be on a stainless steel metal nameplate attached to the container, located to remain visible after the container is installed. [58:5.2.8.3]

69.2.1.4.3.1 The nameplate shall be attached in such a way as to minimize corrosion of the nameplate or its fastening means and not contribute to corrosion of the container. [58:5.2.8.3(A)]

69.2.1.4.3.2 Where the container is buried, mounded, insulated, or otherwise covered so the nameplate is obscured, the information contained on the nameplate shall be duplicated and installed on adjacent piping or on a structure in a clearly visible location. [58:5.2.8.3(B)]

69.2.1.4.3.3 ASME containers shall be marked with the following information:

(1) Service for which the container is designed (for example, underground, aboveground, or both)
(2) Name and address of container supplier or trade name of container
(3) Water capacity of container in pounds or U.S. gallons
(4) MAWP in pounds per square inch
(5) The wording "This container shall not contain a product that has a vapor pressure in excess of ___ psig at 100°F" *(See Table 5.2.4.2 of NFPA 58.)*
(6) Outside surface area in square feet
(7) Year of manufacture
(8) Shell thickness and head thickness
(9) OL (overall length), OD (outside diameter), HD (head design)
(10) Manufacturer's serial number
(11) ASME Code symbol
(12) Minimum design metal temperature ___°F at MAWP ___ psi
(13) Type of construction "W"
(14) Degree of radiography "RT-___" [58:5.2.8.3(C)]

69.2.1.4.4 Warning labels shall meet the following requirements:

(1) Warning labels shall be applied to all cylinders of 100 lb (45.4 kg) LP-Gas capacity or less that are not filled on site.
(2) Warning labels shall include information on the potential hazards of LP-Gas. [58:5.2.8.4]

69.2.1.4.5 All ASME containers that contain unodorized LP-Gas products shall be marked NOT ODORIZED in letters 4 in. (10 cm) in height with a contrasting background surrounded by a ½ in. (1.3 cm) rectangular border. [58:5.2.8.5]

69.2.2 Container Appurtenances. Container appurtenances shall be fabricated of materials that are suitable for LP-Gas service, and shall be resistant to the action of LP-Gas under service conditions, and shall comply with Section 5.7 of NFPA 58.

69.2.3 Piping (Including Hose), Fittings, and Valves. Piping (including hose), fittings, and valves shall comply with Section 5.8 of NFPA 58.

69.3 Installation of LP-Gas Systems.

69.3.1* Application. Section 69.3 shall apply to the following:

(1) The location and field installation of LP-Gas systems that use components, subassemblies, container assemblies, and container systems that are fabricated in accordance with Chapter 5 of NFPA 58
(2) The location of containers and liquid transfer systems
(3) The installation of container appurtenances and regulators
(4) The installation of piping (including flexible connectors and hose), hydrostatic relief valves, and piping service limitations
(5) The installation of equipment
(6) The testing of piping systems [58:6.1.1]

69.3.2 Location of Containers.

69.3.2.1 LP-Gas containers shall be located outside of buildings unless they are specifically allowed to be located inside of buildings. [58:6.2.1]

69.3.2.2 LP-Gas containers shall be allowed in buildings only for the following applications:

(1) Cylinders as specifically provided for in Section 6.17 of NFPA 58
(2) Containers of less than 125 gal (0.5 m^3) water capacity for the purposes of being filled in buildings or structures complying with Chapter 10 of NFPA 58
(3) Containers on LP-Gas vehicles complying with and parked or garaged in accordance with Chapter 9 of NFPA 58
(4) Containers used with LP-Gas stationary or portable engine fuel systems complying with Chapter 11 of NFPA 58
(5) Containers used with LP-Gas fueled industrial trucks complying with 11.12.4 of NFPA 58
(6) Containers on LP-Gas fueled vehicles garaged in accordance with Section 11.15 of NFPA 58
(7) Cylinders awaiting use, resale, or exchange when stored in accordance with Chapter 8 of NFPA 58 [58:6.2.2]

69.3.3 Container Separation Distances.

69.3.3.1 Containers installed outside of buildings, whether of the portable type replaced on a cylinder exchange basis or permanently installed and refilled at the installation, shall be located with respect to the adjacent containers, important building, group of buildings, or line of adjoining property that can be built upon, in accordance with Table 69.3.3.1, Table 69.3.4.2, Table 69.3.4.5.8, and 6.3.2 through 6.3.12 of NFPA 58. [58:6.3.1]

69.3.3.2 When the provisions of 6.24.3 through 6.24.5 of NFPA 58 are met, the minimum distance from an ASME container to a building shall be reduced by one-half for ASME containers of 2001 gal through 30,000 gal (7.6 m^3 through 114 m^3) water capacity. [58:6.3.2]

69.3.3.3 The 25 ft (7.6 m) distance from aboveground ASME containers of 501 gal to 2000 gal (1.9 m^3 to 7.6 m^3) water capacity to buildings, a group of buildings, or the line of adjoining property that can be built upon shall be reduced to 10 ft (3 m) for a single ASME container of 1200 gal (4.5 m^3) or less water capacity where such container is at least 25 ft (7.6 m) from any other LP-Gas container of more than 125 gal (0.5 m^3) water capacity. [58:6.3.3]

69.3.3.4 Minimum distances for underground or mounded ASME containers of 2001 gal through 30,000 gal (7.6 m^3 through 114 m^3) water capacity incorporating all the provisions of Section 6.24 of NFPA 58 shall be reduced to 10 ft (3 m). [58:6.3.4]

69.3.3.4.1 Distances for all underground and mounded ASME containers shall be measured from the pressure relief valve and the filling connection. [58:6.3.4.1]

69.3.3.4.2 No part of an underground ASME container shall be less than 10 ft (3 m) from a building or line of adjoining property that can be built upon. [58:6.3.4.2]

69.3.3.4.3 No part of a mounded ASME container that is installed above grade shall be less than 5 ft (1.5 m) from a building or line of adjoining property that can be built upon. [58:6.3.4.3]

69.3.3.5 The separation distances specified in Table 69.3.3.1 between containers and of buildings of other than wood-frame construction devoted exclusively to gas manufacturing and distribution operations shall be reduced to 10 ft (3 m). [58:6.3.5]

69.3.3.6 If the aggregate water capacity of a multicontainer installation is 501 gal (1.9 m^3) or more comprised of individual containers each with a water capacity of less than 125 gal (0.5 m^3), the minimum distance shall comply with Table 69.3.3.1 and the following:

(1) The aggregate capacity shall be used rather than the capacity per container.

Table 69.3.3.1 Separation Distances Between Containers, Important Buildings, and Other Properties

Water Capacity per Container		Minimum Distances					
		Mounded or Underground Containers[a]		Aboveground Containers[b]		Between Containers[c]	
gal	m^3	ft	m	ft	m	ft	m
<125[d]	<0.5[d]	10	3	0[e]	0[e]	0	0
125–250	0.5–1.0	10	3	10	3	0	0
251–500	1.0+–1.9	10	3	10	3	3	1
501–2000	1.9+–7.6	10	3	25[f]	7.6	3	1
2001–30,000	7.6+–114	50	15	50	15	5	1.5
30,001–70,000	114+–265	50	15	75	23	¼ of sum of diameters of adjacent containers	
70,001–90,000	265+–341	50	15	100	30		
90,001–120,000	341+–454	50	15	125	38		
120,001–200,000	454+–757	50	15	200	61		
200,001–1,000,000	757+–3785	50	15	300	91		
>1,000,000	>3785	50	15	400	122		

[a] See 6.3.4 of NFPA 58.
[b] See 6.3.12 of NFPA 58.
[c] See 6.3.11 of NFPA 58.
[d] See 6.3.9 of NFPA 58.
[e] See 6.3.7, 6.3.8, and 6.3.9 of NFPA 58.
[f] See 6.3.3 of NFPA 58.
[**58**:Table 6.3.9.]

(2) If more than one such installation is made, each installation shall be separated from any other installation by at least 25 ft (7.6 m).
(3) The minimum distances between containers shall not be applied to installations covered by 69.3.3.6. [**58**:6.3.6]

69.3.3.7 Cylinders installed alongside of buildings shall be positioned so that the discharge from the cylinder pressure relief device is located as follows:

(1) At least 3 ft (1 m) horizontally away from any building opening that is below the level of such discharge
(2) At least 5 ft (1.5 m) in any direction away from any exterior source of ignition, openings into direct-vent (sealed combustion system) appliances, or mechanical ventilation air intakes [**58**:6.3.7]

69.3.3.8 Cylinders shall not be located and installed underneath any building unless the space is open to the atmosphere for 50 percent of its perimeter or more. [**58**:6.3.8]

69.3.3.9 The distance measured horizontally from the point of discharge of a container pressure relief valve to any building opening below the level of such discharge shall be in accordance with Table 69.3.3.9. [**58**:6.3.9]

69.3.3.10 The distance measured in any direction from the point of discharge of a container pressure relief valve, vent of a fixed maximum liquid level gauge on a container, and the container filling connection to exterior sources of ignition, openings into direct-vent (sealed combustion system) appliances, and mechanical ventilation air intakes shall be in accordance with Table 69.3.3.9. [**58**:6.3.10]

Table 69.3.3.9 Separation Distance Between Container Pressure Relief Valve and Building Openings

Container Type	Exchange or Filled on Site	Distance Horizontally from Relief Valve Discharge to Opening Below Discharge		Discharge from Relief Valve, Vent Discharge, and Filling Connection to Exterior Source of Ignition, Openings into Direct-Vent Appliances, Mechanical Ventilation Air Intakes	
		ft	m	ft	m
Cylinder	Exchange	3	0.9	5	1.5
Cylinder	Filled on site	3	0.9	10	3.0
ASME	Filled on site	5	1.5	10	3.0

[**58**:Table 6.3.9]

69.3.3.11 Access at the ends or sides of individual underground containers having a water capacity of 125 gal (0.5 m^3) or more shall be provided in multicontainer installations to facilitate working with cranes or hoists. [**58**:6.3.11]

69.3.3.12 The horizontal distance between the portion of a building that overhangs out of the building wall and an ASME container of 125 gal. (0.5 m^3) or more water capacity shall comply with the following:

(1) The horizontal distance shall be measured from a point determined by projecting the outside edge of the overhanging structure vertically downward to grade or other level upon which the container is installed.
(2) This horizontal distance shall be at least 50 percent of the separation distance required in Table 69.3.3.1.
(3) This requirement shall apply only when the overhang extends more than 5 ft (1.5 m) from the building.
(4) This requirement shall not apply when the overhanging structure is 50 ft (15 m) or more above the relief valve discharge outlet.
(5) This requirement shall not apply to ASME containers, 2001 to 30,000 gal water capacity, where the container distance from a building is in accordance with 6.24.2 of NFPA 58. [58:6.3.12]

69.3.4 Other Container Location Requirements.

69.3.4.1 Where storage containers having an aggregate water capacity of more than 4000 gal (15.1 m^3) are located in heavily populated or congested areas, the siting provisions of 6.3.1 of NFPA 58 and Table 69.3.3.1 shall be permitted to be modified as indicated by the incident prevention review described in 6.23.3 of NFPA 58. [58:6.4.1]

69.3.4.2 Aboveground multicontainer installations comprised of ASME containers having an individual water capacity of 12,000 gal (45 m^3) or more and installed for use in a single location shall be limited to the number of containers in one group, with each group separated from the next group in accordance with the degree of fire protection provided in Table 69.3.4.2. [58:6.4.2]

69.3.4.3 Where the provisions of 6.24.3 and 6.24.4 of NFPA 58 are met, the minimum separation distance between groups of ASME containers protected by hose stream only shall be one-half the distances in Table 69.3.4.2. [58:6.4.3]

Table 69.3.4.2 Maximum Number of Containers in a Group and Their Separation Distances

Fire Protection Provided by	Maximum Number of Containers in One Group	Minimum Separation Between Groups	
		ft	m
Hose streams only (*see 6.4.2 and 6.23.3.1 of NFPA 58*)	6	50	15
Fixed monitor nozzles per 6.23.6.3 of NFPA 58	6	25	7.6
Fixed water spray per 6.23.3.1 of NFPA 58	9	25	7.6
Insulation per 6.23.5.1 of NFPA 58	9	25	7.6

[58:Table 6.4.2]

69.3.4.4 Underground or mounded ASME containers shall be located in accordance with 69.3.4.4.1 through 69.3.4.4.5. [58:6.4.4]

69.3.4.4.1 They shall be located outside of any buildings. [58:6.4.4.1]

69.3.4.4.2 Buildings shall not be constructed over any underground or mounded containers. [58:6.4.4.2]

69.3.4.4.3 The sides of adjacent containers shall be separated in accordance with Table 69.3.3.1 but shall not be separated less than 3 ft (1 m). [58:6.4.4.3]

69.3.4.4.4 Where containers are installed parallel with ends in line, the number of containers in one group shall not be limited. [58:6.4.4.4]

69.3.4.4.5 Where more than one row of containers is installed, the adjacent ends of the containers in each row shall be separated by not less than 10 ft (3 m). [58:6.4.4.5]

69.3.4.5 Additional container installation requirements shall comply with 69.3.4.5.1 through 69.3.4.5.12, 69.3.4.6, and 69.3.4.7. [58:6.4.5]

69.3.4.5.1 Containers shall not be stacked one above the other. [58:6.4.5.1]

69.3.4.5.2 Loose or piled combustible material and weeds and long dry grass shall be separated from containers by a minimum of 10 ft (3 m). [58:6.4.5.2]

69.3.4.5.3* The area under containers shall be graded or shall have dikes or curbs installed so that the flow or accumulation of flammable liquids with flash points below 200°F (93.4°C) is prevented. [58:6.4.5.3]

69.3.4.5.4 LP-Gas containers shall be located at least 10 ft (3 m) from the centerline of the wall of diked areas containing flammable or combustible liquids. [58:6.4.5.4]

69.3.4.5.5 The minimum horizontal separation between aboveground LP-Gas containers and aboveground tanks containing liquids having flash points below 200°F (93.4°C) shall be 20 ft (6 m). [58:6.4.5.5]

69.3.4.5.6 No horizontal separation shall be required between aboveground LP-Gas containers and underground tanks containing flammable or combustible liquids installed in accordance with NFPA 30. [58:6.4.5.6]

69.3.4.5.7 The requirements of 69.3.4.5.6 shall not apply where LP-Gas containers of 125 gal (0.5 m^3) or less water capacity are installed adjacent to fuel oil supply tanks of 660 gal (2.5 m^3) or less capacity. [58:6.4.5.7]

69.3.4.5.8* The minimum separation between LP-Gas containers and oxygen or gaseous hydrogen containers shall be in accordance with Table 69.3.4.5.8. [58:6.4.5.8]

69.3.4.5.9 Where protective structures having a minimum fire resistance rating of 2 hours interrupt the line of sight between uninsulated portions of the oxygen or hydrogen containers and the LP-Gas containers, no minimum distance shall apply. [58:6.4.5.9]

69.3.4.5.10 The minimum separation between LP-Gas containers and liquefied hydrogen containers shall be in accordance with NFPA 50B, *Standard for Liquefied Hydrogen Systems at Consumer Sites.* [58:6.4.5.10]

Table 69.3.4.5.8 Separation Distances of LP-Gas Containers and Oxygen and Hydrogen Containers

LP-Gas Containers Aggregate Water Capacity		Separation from Oxygen Containers Aggregate Capacity					Separation from Gaseous Hydrogen Containers Aggregate Capacity				
		400 ft³ (11 m³)* or Less	More than 400 ft³ (11 m³)* to 20,000 ft³ (566 m³)* Including Unconnected Reserves		More than 20,000 ft³ (566 m³)* Including Unconnected Reserves		Less than 400 ft³ (11 m³)*	400 ft³ (11 m³)* to 3000 ft³ (85 m³)*		More than 3000 ft³ (85 m³)*	
gal	m³		ft	m	ft	m		ft	m	ft	m
≤1200	≤4.5	None	20	6	25	7.6	—	—	—	—	—
>1200	>4.5	None	20	6	50	15	—	—	—	—	—
≤500	≤1.9	—	—	—	—	—	None	10	3	25	7.6
>500	>1.9	—	—	—	—	—	None	25	7.6	50	15

*Cubic feet (m³) measured at 70°F (21°C) and atmospheric pressure.
[**58**:Table 6.4.5.8]

69.3.4.5.11 Where LP-Gas cylinders are to be stored or used in the same area with other compressed gases, the cylinders shall be marked to identify their content in accordance with ANSI/CGA C-7, *Guide to the Preparation of Precautionary Labeling and Marking of Compressed Gas Containers.* [**58**:6.4.5.11]

69.3.4.5.12 An aboveground LP-Gas container and any of its parts shall not be located within 6 ft (1.8 m) of a vertical plane beneath overhead electric power lines that are over 600 volts, nominal. [**58**:6.4.5.12]

69.3.4.6* Refrigerated LP-Gas containers shall be located within an impoundment in accordance with Section 12.3 of NFPA 58. [**58**:6.4.6]

69.3.4.7* Structures such as fire walls, fences, earth or concrete barriers, and other similar structures shall not be permitted around or over installed nonrefrigerated containers unless specifically allowed as follows:

(1) Structures partially enclosing containers shall be permitted if designed in accordance with a sound fire protection analysis.
(2) Structures used to prevent flammable or combustible liquid accumulation or flow shall be permitted in accordance with 6.4.5.3 of NFPA 58.
(3) Structures between LP-Gas containers and gaseous hydrogen containers shall be permitted in accordance with 6.4.5.9 of NFPA 58.
(4) Structures such as fences shall be permitted in accordance with 6.16.5 of NFPA 58. [**58**:6.4.7]

69.3.5 Location of Transfer Operations.

69.3.5.1* Liquid shall be transferred into containers, including containers mounted on vehicles, only outdoors, or in structures specially designed for that purpose. [**58**:6.5.1]

69.3.5.1.1 The transfer of liquid into containers mounted on vehicles shall not take place within a building but shall be permitted to take place under a weather shelter or canopy. *(See 6.22.3.3 of NFPA 58.)* [**58**:6.5.1.1]

69.3.5.1.2 Structures housing transfer operations or converted for such use after December 31, 1972, shall comply with Chapter 10 of NFPA 58. [**58**:6.5.1.2]

69.3.5.1.3 The transfer of liquid into containers on the roofs of structures shall be permitted, provided that the installation conforms to the requirements contained in 6.6.7 and 6.17.11 of NFPA 58. [**58**:6.5.1.3]

69.3.5.1.4 The transfer hose shall not be routed in or through any building except those specified in 6.5.1.2 of NFPA 58. [**58**:6.5.1.4]

69.3.5.2 Filling of containers located outdoors in stationary installations in accordance with Section 6.3 of NFPA 58 shall be permitted to be filled at that location. [**58**:6.5.2]

69.3.5.3 If the point of transfer of containers located outdoors in stationary installations is not located at the container, it shall be located in accordance with Table 69.3.5.3. [**58**:6.5.3]

69.3.5.4 Containers not located in stationary installations shall be filled at a location determined by the point of transfer in accordance with Table 69.3.5.3. [**58**:6.5.4]

69.3.5.4.1 If the point of transfer is a component of a system covered by Section 6.21 or Chapter 11 of NFPA 58, the requirements of parts A, B, and C of Table 69.3.5.3 shall not apply to the structure containing the point of transfer. [**58**:6.5.4.1]

69.3.5.4.2 If LP-Gas is vented to the atmosphere under the conditions stipulated in 7.3.1(4) of NFPA 58, the distances in Table 69.3.5.3 shall be doubled. [**58**:6.5.4.2]

69.3.5.4.3 If the point of transfer is housed in a structure complying with Chapter 10 of NFPA 58, the distances in Table 69.3.5.3 shall be permitted to be reduced provided the common walls comply with 10.3.1.3 of NFPA 58. [**58**:6.5.4.3]

69.3.5.4.4 The distances in Table 69.3.5.3, parts B, C, D, E, F(2), and J shall be reduced by one-half where the system incorporates the provisions of low emission transfer as provided in 6.24.5 of NFPA 58. [**58**:6.5.4.4]

69.3.6 Installation of Containers.

69.3.6.1 General Requirements.

69.3.6.1.1 Containers shall be positioned so that the pressure relief valve is in direct communication with the vapor space of the container. [**58**:6.6.1.1]

Table 69.3.5.3 Distance Between Point of Transfer and Exposures

Part	Exposure	Minimum Horizontal Distance ft	Minimum Horizontal Distance m
A	Buildings,[a] mobile homes, recreational vehicles, and modular homes with fire-resistive walls[b]	10[c]	3.1
B	Buildings[a] with other than fire-resistive walls[b]	25[c]	7.6[c]
C	Building wall openings or pits at or below the level of the point of transfer	25[c]	7.6[c]
D	Line of adjoining property that can be built upon	25[c]	7.6[c]
E	Outdoor places of public assembly including schoolyards, athletic fields, and playgrounds	50[c]	15[c]
F	Public ways including public streets, highways, thoroughfares, and sidewalks		
	(1) From points of transfer in LP-Gas dispensing stations and at vehicle fuel dispensers	10	3.1
	(2) From other points of transfer	25[c]	7.6[c]
G	Driveways[d]	5	1.5
H	Mainline railroad track centerlines	25	7.6
I	Containers[e] other than those being filled	10	3.1
J	Flammable and Class II combustible liquid[f] dispensers and the fill connections of containers	10[c]	3.1[c]
K	Flammable and Class II combustible liquid containers, aboveground containers, and containers underground	20	6.1

[a]Buildings, for the purpose of the table, also include structures such as tents and box trailers at construction sites.

[b]Walls constructed of noncombustible materials having, as erected, a fire resistance rating of at least 1 hour as determined by NFPA 251, *Standard Methods of Tests of Fire Endurance of Building Construction and Materials.*

[c]See 6.5.4.4 of NFPA 58.

[d]Not applicable to driveways and points of transfer at vehicle fuel dispensers.

[e]Not applicable to filling connections at the storage container or to dispensing vehicle fuel dispenser units of 2000 gal (7.6 m^3) water capacity or less when used for filling containers not mounted on vehicles.

[f]NFPA 30 defines these as follows: Flammable liquids include those having a flash point below 100°F (37.8°C) and having a vapor pressure not exceeding 40 psia (an absolute pressure of 2068 mm Hg) at 100°F (37.8°C). Class II combustible liquids include those having a flash point at or above 100°F (37.8°C) and below 140°F (60°C).

[58:Table 6.5.3]

69.3.6.1.2 LP-Gas containers or systems of which they are a part shall be protected from damage from vehicles. [58:6.6.1.2]

69.3.6.1.3 Field welding on containers shall be limited to nonpressure parts such as saddle plates, wear plates, or brackets installed by the container manufacturer. [58:6.6.1.3]

69.3.6.1.4* Aboveground containers shall be painted. [58:6.6.1.4]

69.3.6.1.5 Containers shall be installed so that all container operating appurtenances are accessible. [58:6.6.1.5]

69.3.6.1.6 Where necessary to prevent flotation due to possible high flood waters around aboveground or mounded containers, or high water table for those underground and partially underground, containers shall be securely anchored. [58:6.6.1.6]

69.3.6.2 Installation of Cylinders.

69.3.6.2.1 Cylinders shall be installed only aboveground and shall be set upon a firm foundation or otherwise be firmly secured. The cylinder shall not be in contact with the soil. [58:6.6.2.1]

69.3.6.2.2 Flexibility shall be provided in the connecting piping. Where flexible connectors are used, they shall comply with 6.8.7 of NFPA 58. [58:6.6.2.2]

69.3.7 Internal Valves.

69.3.7.1 The requirements of 69.3.7.3 through 69.3.7.5 shall be required for internal valves in liquid service that are installed in containers over 4000 gal (15.2 m^3) water capacity by July 1, 2003. [58:6.9.1]

69.3.7.2 Internal valves shall be installed in accordance with 5.7.7.2 and Table 5.7.7.3 of NFPA 58 on containers over 4000 gal (15.2 m^3) water capacity. [58:6.9.2]

69.3.7.3 Automatic shutdown of internal valves in liquid service shall be provided using thermal (fire) actuation. The thermal sensing element of the internal valve shall be within 5 ft (1.5 m) of the internal valve. [58:6.9.3]

69.3.7.4 At least one remote shutdown station for internal valves in liquid service shall be installed not less than 25 ft (7.6 m) or more than 100 ft (30 m) from the liquid transfer point. This shall be retroactive to all internal valves required by NFPA 58. [58:6.9.4]

69.3.7.5 Emergency remote shutdown stations shall be identified by a sign, visible from the point of transfer, incorporating the words "Propane — Container Liquid Valve Emergency Shutoff" in block letters of not less than 2 in. (51 mm) in height on a background of contrasting colors to the letters. [58:6.9.5]

69.3.8 Emergency Shutoff Valves.

69.3.8.1 On new installations and on existing installations, stationary container storage systems with an aggregate water capacity of more than 4000 gal (15.1 m^3) utilizing a liquid transfer line that is 1½ in. (39 mm) or larger and a pressure equalizing vapor line that is 1¼ in. (32 mm) or larger shall be equipped with emergency shutoff valves. [58:6.10.1]

69.3.8.2 An emergency shutoff valve shall be installed in the transfer lines of the fixed piping transfer system within 20 ft (6 m) of lineal pipe from the nearest end of the hose or swivel-type piping connections. [58:6.10.2]

69.3.8.3 When the flow is only into the container, a backflow check valve shall be permitted to be used in lieu of an emergency shutoff valve if installed in the fixed piping transfer system downstream of the hose or swivel-type piping connections. [58:6.10.3]

69.3.8.4 The backflow check valve shall have a metal-to-metal seat or a primary resilient seat with metal back-up, not hinged with combustible material, and shall be designed for this specific application. [58:6.10.4]

69.3.8.5 Where there are two or more liquid or vapor lines with hoses or swivel-type piping connected of the sizes designated, an emergency shutoff valve or a backflow check valve where allowed shall be installed in each leg of the piping. [58:6.10.5]

69.3.8.6 Emergency shutoff valves shall be installed so that the temperature-sensitive element in the valve, or a supplemental temperature-sensitive element [250°F (121°C) maximum] connected to actuate the valve, is not more than 5 ft (1.5 m) from the nearest end of the hose or swivel-type piping connected to the line in which the valve is installed. [58:6.10.6]

69.3.8.7 Temperature-sensitive elements of emergency shutoff valves shall not be painted, nor shall they have any ornamental finishes applied after manufacture. [58:6.10.7]

69.3.8.8* The emergency shutoff valves or backflow check valves shall be installed in the fixed piping so that any break resulting from a pull will occur on the hose or swivel-type piping side of the connection while retaining intact the valves and piping on the plant side of the connection. [58:6.10.8]

69.3.8.9 Emergency shutoff valves and backflow check valves required by NFPA 58 shall be tested annually for the functions required by 5.10.4 of NFPA 58. The results of the test shall be documented. [58:6.10.9]

69.3.8.10 All emergency shutoff valves shall comply with the following:

(1) Each emergency shutoff valve shall have at least one clearly identified and easily accessible manually operated remote emergency shutoff device.
(2) The shutoff device shall be located not less than 25 ft (7.6 m) or more than 100 ft (30.5 m) in the path of egress from the emergency shutoff valve.
(3) Where an emergency shutoff valve is used in lieu of an internal valve in compliance with 5.7.7.2(D)(2) of NFPA 58, the remote shutoff device shall be installed in accordance with 6.9.4 of NFPA 58. [58:6.10.10]

69.3.8.11 Emergency shutoff valves for railroad tank car transfer systems shall be in accordance with 6.16.2.3, 6.16.2.6, 6.24.4, 7.2.3.6, 7.2.3.7, and 7.2.3.8 of NFPA 58. [58:6.10.11]

69.3.9 Installation in Areas of Heavy Snowfall. In areas where heavy snowfall is anticipated, piping, regulators, meters, and other equipment installed in the piping system shall be protected from the forces anticipated as a result of accumulated snow. [58:6.13]

69.3.10 LP-Gas Systems in Buildings or on Building Roofs or Exterior Balconies.

69.3.10.1 Application.

69.3.10.1.1 Subsection 69.3.10 shall apply to the installation of the following LP-Gas systems in buildings or structures:

(1) Cylinders inside of buildings or on the roofs or exterior balconies of buildings
(2) Systems in which the liquid is piped from outside containers into buildings or onto the roof [58:6.17.1.1]

69.3.10.1.2 Cylinders in use shall mean connected for use. [58:6.17.1.2]

69.3.10.1.2.1 The use of cylinders indoors shall be only for the purposes specified in 6.17.4 through 6.17.9 of NFPA 58. [58:6.17.1.2(A)]

69.3.10.1.2.2 The use of cylinders indoors shall be limited to those conditions where operational requirements make the indoor use of cylinders necessary and location outside is impractical. [58:6.17.1.2(B)]

69.3.10.1.2.3 The use of cylinders on roofs shall be limited to those conditions where operational requirements make use of cylinders necessary and location other than on roofs of buildings or structures is impractical. [58:6.17.1.2(C)]

69.3.10.1.2.4 Liquid LP-Gas shall be piped into buildings or structures only for the purposes specified in 6.8.1.1(4) of NFPA 58. [58:6.17.1.2(D)]

69.3.10.1.3 Storage of cylinders awaiting use shall be in accordance with Chapter 8 of NFPA 58. [58:6.17.1.3]

69.3.10.1.4 Transportation of cylinders within a building shall be in accordance with 6.17.3.6 of NFPA 58. [58:6.17.1.4]

69.3.10.1.5 The following provisions shall be required in addition to those specified in Sections 6.2 and 6.3 of NFPA 58:

(1) Liquid transfer systems shall be in accordance with Chapter 7 of NFPA 58.
(2) Engine fuel systems used inside buildings shall be in accordance with Chapter 11 of NFPA 58.
(3) LP-Gas transport or cargo tank vehicles stored, serviced, or repaired in buildings shall be in accordance with Chapter 9 of NFPA 58. [58:6.17.1.5]

69.3.10.2 Additional Equipment Requirements for Cylinders, Equipment, Piping, and Appliances Used in Buildings, Building Roofs, and Exterior Balconies.

69.3.10.2.1 Cylinders shall be in accordance with the following:

(1) Cylinders shall comply with DOT cylinder specifications.
(2) Cylinders shall not exceed 245 lb (111 kg) water capacity [nominal 100 lb (45 kg) LP-Gas capacity] each.
(3) Cylinders shall comply with other applicable provisions of Section 5.2 of NFPA 58, and they shall be equipped as provided in Section 5.7 of NFPA 58.
(4) Cylinders shall be marked in accordance with 5.2.8.1 and 5.2.8.2 of NFPA 58.
(5) Cylinders with propane capacities greater than 2 lb (0.9 kg) shall be equipped as provided in Table 5.7.7.1 of NFPA 58, and an excess-flow valve shall be provided for vapor service when used indoors.
(6) Cylinder valves shall be protected in accordance with 5.2.6.1 of NFPA 58.
(7) Cylinders having water capacities greater than 2.7 lb (1.2 kg) and connected for use shall stand on a firm and substantially level surface.
(8) Cylinders shall be secured in an upright position if necessary.
(9) Cylinders and the valve-protecting devices used with them shall be oriented to minimize the possibility of impingement of the pressure relief device discharge on the cylinder and adjacent cylinders. [58:6.17.2.1]

69.3.10.2.2 Only regulators recommended by the manufacturer for use with LP-Gas shall be used. [58:6.17.2.2]

69.3.10.2.3 Manifolds and fittings connecting cylinders to pressure regulator inlets shall be designed for at least 250 psig (1.7 MPag) service pressure. [58:6.17.2.3]

69.3.10.2.4 Piping shall comply with Section 5.8 of NFPA 58 and shall have a pressure rating of 250 psig (1.7 MPag). [58:6.17.2.4]

69.3.10.2.5 Liquid piping and vapor piping at pressures above 125 psig (0.9 MPag) shall be installed in accordance with 6.8.3 of NFPA 58. [58:6.17.2.5]

69.3.10.2.6 Hose, hose connections, and flexible connectors shall comply with the following:

(1) Hose used at pressures above 5 psi (34 kPa) shall be designed for a pressure of at least 350 psig (2.4 MPag).
(2) Hose used at a pressure of 5 psi (34 kPa) or less and used in agricultural buildings not normally occupied by the public shall be designed for the operating pressure of the hose.
(3) Hose shall comply with 5.8.6 of NFPA 58.
(4) Hose shall be installed in accordance with 6.18.2 of NFPA 58.
(5) Hose length requirements of 6.18.2.2(1) of NFPA 58 shall be applicable.
(6) Hose shall be as short as practical, without kinking or straining hose or causing it to be close enough to a burner to be damaged by heat. [58:6.17.2.6]

69.3.10.2.7* Portable heaters, including salamanders, shall comply with the following:

(1) Portable heaters shall be equipped with an approved automatic device to shut off the flow of gas to the main burner and to the pilot, if used, in the event of flame extinguishment or combustion failure.
(2) Portable heaters shall be self-supporting unless designed for cylinder mounting.
(3) Portable heaters shall not be installed utilizing cylinder valves, connectors, regulators, manifolds, piping, or tubing as structural supports.
(4) Portable heaters having an input of more than 50,000 Btu/hr (53 MJ/hr) shall be equipped with either a pilot that must be lighted and proved before the main burner can be turned on or an approved electric ignition system. [58:6.17.2.7]

69.3.10.2.8 The provisions of 69.3.10.2.7 shall not be applicable to the following:

(1) Tar kettle burners, hand torches, or melting pots
(2) Portable heaters with less than 7500 Btu/hr (8 MJ/hr) input if used with cylinders having a maximum water capacity of 2.7 lb (1.2 kg) and filled with no more than 16.8 oz (0.522 kg) of LP-Gas [58:6.17.2.8]

69.3.10.3 Buildings Under Construction or Undergoing Major Renovation.

69.3.10.3.1 Cylinders shall be permitted to be used and transported in buildings or structures under construction or undergoing major renovation where such buildings are not occupied by the public. [58:6.17.4.1]

69.3.10.3.2 The use and transportation of cylinders in the unoccupied portions of buildings or structures under construction or undergoing major renovation that are partially occupied by the public shall be approved by the AHJ. [58:6.17.4.2]

69.3.10.3.3 Cylinders, equipment, piping, and appliances shall comply with 69.3.10.2. [58:6.17.4.3]

69.3.10.3.4 Heaters used for temporary heating shall be located at least 6 ft (1.8 m) from any cylinder. [58:6.17.4.4]

69.3.10.3.5 Integral heater-cylinder units specifically designed for the attachment of the heater to the cylinder, or to a supporting standard attached to the cylinder, and designed and installed to prevent direct or radiant heat application to the cylinder shall be exempt from the spacing requirement of 69.3.10.3.4. [58:6.17.4.5]

69.3.10.3.6 Blower-type and radiant-type units shall not be directed toward any cylinder within 20 ft (6.1 m). [58:6.17.4.6]

69.3.10.3.7 If two or more heater-cylinder units of either the integral or nonintegral type are located in an unpartitioned area on the same floor, the cylinder(s) of each such unit shall be separated from the cylinder(s) of any other such unit by at least 20 ft (6.1 m). [58:6.17.4.7]

69.3.10.3.8 If heaters are connected to cylinders manifolded together for use in an unpartitioned area on the same floor, the total water capacity of cylinders manifolded together serving any one heater shall not be greater than 735 lb (333 kg) [nominal 300 lb (136 kg) LP-Gas capacity]. If there is more than one such manifold, it shall be separated from any other by at least 20 ft (6.1 m). [58:6.17.4.8]

69.3.10.3.9 Where cylinders are manifolded together for connection to a heater or heaters on another floor, the following shall apply:

(1) Heaters shall not be installed on the same floors with manifolded cylinders.
(2) The total water capacity of the cylinders connected to any one manifold shall not be greater than 2450 lb (1111 kg) [nominal 1000 lb (454 kg) LP-Gas capacity].
(3) Manifolds of more than 735 lb (333 kg) water capacity [nominal 300 lb (136 kg) LP-Gas capacity], if located in the same unpartitioned area, shall be separated from each other by at least 50 ft (15 m). [58:6.17.4.9]

69.3.10.3.10 Where compliance with the provisions of 69.3.10.3.6 through 69.3.10.3.9 is impractical, alternate installation provisions shall be allowed with the approval of the AHJ. [58:6.17.4.10]

69.3.10.4 Buildings Undergoing Minor Renovation When Frequented by the Public.

69.3.10.4.1 Cylinders used and transported for repair or minor renovation in buildings frequented by the public during the hours the public normally occupies the building shall comply with the following:

(1) The maximum water capacity of individual cylinders shall be 50 lb (23 kg) [nominal 20 lb (9.1 kg) LP-Gas capacity], and the number of cylinders in the building shall not exceed the number of workers assigned to the use of the LP-Gas.
(2) Cylinders having a water capacity greater than 2.7 lb (1.2 kg) shall not be left unattended. [58:6.17.5.1]

69.3.10.4.2 During the hours the building is not open to the public, cylinders used and transported within the building for repair or minor renovation and with a water capacity greater than 2.7 lb (1.2 kg) shall not be left unattended. [58:6.17.5.2]

69.3.10.5 Buildings Housing Industrial Occupancies.

69.3.10.5.1 Cylinders used in buildings housing industrial occupancies for processing, research, or experimental purposes shall comply with 69.3.10.5.1.1 and 69.3.10.5.1.2. [**58:**6.17.6.1]

69.3.10.5.1.1 If cylinders are manifolded together, the total water capacity of the connected cylinders shall be not more than 735 lb (333 kg) [nominal 300 lb (136 kg) LP-Gas capacity]. If there is more than one such manifold in a room, it shall be separated from any other by at least 20 ft (6.1 m). [**58:**6.17.6.1(A)]

69.3.10.5.1.2 The amount of LP-Gas in cylinders for research and experimental use in the building shall be limited to the smallest practical quantity. [**58:**6.17.6.1(B)]

69.3.10.5.2 The use of cylinders to supply fuel for temporary heating in buildings housing industrial occupancies with essentially noncombustible contents shall comply with the requirements for cylinders in buildings under construction in 69.3.10.3. [**58:**6.17.6.2]

69.3.10.5.3 The use of fuel cylinders for temporary heating shall be permitted only where portable equipment for space heating is essential and a permanent heating installation is not practical. [**58:**6.17.6.3]

69.3.10.6 Buildings Housing Educational and Institutional Occupancies.

69.3.10.6.1 The use of cylinders in classrooms shall be prohibited unless they are used temporarily for classroom demonstrations in accordance with 69.3.10.8. [**58:**6.17.7.1] .

69.3.10.6.2 Where cylinders are used in buildings housing educational and institutional laboratory occupancies for research and experimental purposes, the following shall apply:

(1) The maximum water capacity of individual cylinders used shall be 50 lb (23 kg) [nominal 20 lb (9.1 kg) LP-Gas capacity] if used in educational occupancies and 12 lb (5.4 kg) [nominal 5 lb (2 kg) LP-Gas capacity] if used in institutional occupancies.
(2) If more than one such cylinder is located in the same room, the cylinders shall be separated by at least 20 ft (6.1 m).
(3) Cylinders not connected for use shall be stored in accordance with Chapter 8 of NFPA 58.
(4) Cylinders shall not be stored in a laboratory room. [**58:**6.17.7.2]

69.3.10.7 Temporary Heating and Food Service Appliances in Buildings in Emergencies.

69.3.10.7.1 Cylinders shall not be used in buildings for temporary emergency heating purposes except when all of the following conditions are met:

(1) The permanent heating system is temporarily out of service.
(2) Heat is necessary to prevent damage to the buildings or contents.
(3) The cylinders and heaters comply with and are used and transported in accordance with 69.3.10.2 and 69.3.10.3.
(4) The temporary heating equipment is not left unattended. [**58:**6.17.8.1]

69.3.10.7.2 When a public emergency has been declared and gas, fuel, or electrical service has been interrupted, portable listed LP-Gas commercial food service appliances meeting the requirements of 69.3.10.8.4 shall be permitted to be temporarily used inside affected buildings. [**58:**6.17.8.2]

69.3.10.7.3 The portable appliances used shall be discontinued and removed from the building at the time the permanently installed appliances are placed back in operation. [**58:**6.17.8.3]

69.3.10.8 Use in Buildings for Demonstrations or Training, and Use of Small Cylinders.

69.3.10.8.1 Cylinders used temporarily inside buildings for public exhibitions or demonstrations, including use in classroom demonstrations, shall be in accordance with the following:

(1) The maximum water capacity of a cylinder shall be 12 lb (5.4 kg) [nominal 5 lb (2 kg) LP-Gas].
(2) If more than one such cylinder is located in a room, the cylinders shall be separated by at least 20 ft (6.1 m). [**58:**6.17.9.1]

69.3.10.8.2 Cylinders used temporarily in buildings for training purposes related to the installation and use of LP-Gas systems shall be in accordance with the following:

(1) The maximum water capacity of individual cylinders shall be 245 lb (111 kg) [nominal 100 lb (45 kg) LP-Gas capacity], but not more than 20 lb (9.1 kg) of LP-Gas shall be placed in a single cylinder.
(2) If more than one such cylinder is located in the same room, the cylinders shall be separated by at least 20 ft (6.1 m).
(3) The training location shall be acceptable to the authority having jurisdiction.
(4) Cylinders shall be promptly removed from the building when the training class has terminated. [**58:**6.17.9.2]

69.3.10.8.3* Cylinders used in buildings as part of approved self-contained torch assemblies or similar appliances shall be in accordance with the following:

(1) Cylinders used in buildings shall comply with UL 147A, *Standard for Nonrefillable (Disposable) Type Fuel Gas Cylinder Assemblies.*
(2) Cylinders shall have a maximum water capacity of 2.7 lb (1.2 kg). [**58:**6.17.9.3]

69.3.10.8.4 Cylinders used with commercial food service appliances shall be used inside restaurants and in attended commercial food catering operations in accordance with the following:

(1) Cylinders and appliances shall be listed.
(2) Commercial food service appliances shall not have more than two 10 oz (296 ml) nonrefillable butane gas cylinders, each having a maximum capacity of 1.08 lb (0.49 kg).
(3) Cylinders shall comply with UL 147B, *Standard for Nonrefillable (Disposal) Type Metal Container Assemblies for Butane.*
(4) Cylinders shall be connected directly to the appliance and shall not be manifolded.
(5) Cylinders shall be an integral part of the listed, approved, commercial food service device and shall be connected without the use of a rubber hose.
(6) Storage of cylinders shall be in accordance with 8.3.1 of NFPA 58. [**58:**6.17.9.4]

69.3.10.9 Cylinders on Roofs or Exterior Balconies.

69.3.10.9.1 Where cylinders are installed permanently on roofs of buildings, the buildings shall be of fire-resistant construction or noncombustible construction having essentially noncombustible contents, or of other construction or contents that are protected with automatic sprinklers. [**58:**6.17.11.1]

69.3.10.9.1.1 The total water capacity of cylinders connected to any one manifold shall be not greater than 980 lb (445 kg)

[nominal 400 lb (181 kg) LP-Gas capacity]. If more than one manifold is located on the roof, it shall be separated from any other by at least 50 ft (15 m). [58:6.17.11.1(A)]

69.3.10.9.1.2 Cylinders shall be located in areas where there is free air circulation, at least 10 ft (3 m) from building openings (such as windows and doors), and at least 20 ft (6.1 m) from air intakes of air-conditioning and ventilating systems. [58:6.17.11.1(B)]

69.3.10.9.1.3 Cylinders shall not be located on roofs that are entirely enclosed by parapets more than 18 in. (460 mm) high unless the parapets are breached with low-level ventilation openings no more than 20 ft (6.1 m) apart, or all openings communicating with the interior of the building are at or above the top of the parapets. [58:6.17.11.1(C)]

69.3.10.9.1.4 Piping shall be in accordance with 69.3.10.2.4 through 69.3.10.2.6. [58:6.17.11.1(D)]

69.3.10.9.1.5 Hose shall not be used for connection to cylinders. [58:6.17.11.1(E)]

69.3.10.9.1.6 The fire department shall be advised of each installation. [58:6.17.11.1(F)]

69.3.10.9.2 Cylinders having water capacities greater than 2.7 lb (1 kg) [nominal 1 lb (0.5 kg)] LP-Gas capacity shall not be located on decks or balconies of dwellings of two or more living units above the first floor unless they are served by exterior stairways. [58:6.17.11.2]

69.3.11 Installation of Appliances.

69.3.11.1 Hose for Portable Appliances.

69.3.11.1.1 The requirements of 69.3.11 shall apply to hoses used on the low-pressure side of regulators to connect portable appliances. [58:6.18.2.1]

69.3.11.1.2 Where used inside buildings, the following shall apply:

(1) The hose shall be the minimum practical length not exceeding 6 ft (1.8 m).
(2) The hose shall not extend from one room to another or pass through any partitions, walls, ceilings, or floors except as provided by 69.3.10.3.9.
(3) The hose shall not be concealed from view or used in concealed locations. [58:6.18.2.2]

69.3.11.1.3 Where installed outside of buildings, the hose length shall be permitted to exceed 6 ft (1.8 m) but shall be as short as practical. [58:6.18.2.3]

69.3.11.1.4 Hose shall be securely connected to the appliance. [58:6.18.2.4]

69.3.11.1.5 The use of rubber slip ends shall not be permitted. [58:6.18.2.5]

69.3.11.1.6 A shutoff valve shall be provided in the piping immediately upstream of the inlet connection of the hose. [58:6.18.2.6]

69.3.11.1.7 Where more than one such appliance shutoff is located near another, the valves shall be marked to indicate which appliance is connected to each valve. [58:6.18.2.7]

69.3.11.1.8 Hose shall be protected against physical damage. [58:6.18.2.8]

69.3.12 LP-Gas Systems on Vehicles (Other Than Engine Fuel Systems).

69.3.12.1* Application. Subsection 69.3.12 shall apply to the following:

(1) Nonengine fuel systems on all vehicles
(2) Installations served by exchangeable (removable) cylinder systems and by permanently mounted containers [58:6.21.1]

69.3.12.2 Nonapplication. Subsection 69.3.12 shall not apply to the following:

(1) Systems installed on mobile homes
(2) Systems installed on recreational vehicles
(3) Cargo tank vehicles, cargo tank vehicles (trailers and semitrailers), and similar units used to transport LP-Gas as cargo, which are covered by Chapter 9 of NFPA 58
(4) LP-Gas engine fuel systems on the vehicles, which are covered by Chapter 11 of NFPA 58 [58:6.21.2]

69.3.12.3 Container Installation Requirements.

69.3.12.3.1 Containers shall comply with 69.3.12.3.1.1 through 69.3.12.3.1.6. [58:6.21.3.1]

69.3.12.3.1.1 ASME mobile containers shall have a MAWP of 250 psig (1.7 Mpag) if constructed prior to April 1, 2001, or 312 psig (2.2 MPag) if constructed on or after April 1, 2001. [58:6.21.3.1(A)]

69.3.12.3.1.2 Cylinders installed on recreational vehicles or on other vehicles shall be constructed for at least a 240 psig (1.6 MPag) service pressure. [58:6.21.3.1(B)]

69.3.12.3.1.3 ASME mobile containers installed on recreational vehicles or on other vehicles shall be constructed for at least a 312 psig (2.2 MPag) MAWP. [58:6.21.3.1(C)]

69.3.12.3.1.4 LP-Gas fuel containers used on passenger-carrying vehicles shall not exceed 200 gal (0.8 m^3) aggregate water capacity. [58:6.21.3.1(D)]

69.3.12.3.1.5 The capacity of individual LP-Gas containers on highway vehicles shall be in accordance with Table 69.3.12.3.1.5. [58:6.21.3.1(E)]

Table 69.3.12.3.1.5 Maximum Capacities of Individual LP-Gas Containers Installed on LP-Gas Highway Vehicles

Vehicle	Maximum Container Water Capacity	
	gal	m^3
Passenger vehicle	200	0.8
Nonpassenger vehicle	300	1.1
Road surfacing vehicle	1000	3.8
Cargo tank vehicle	Not limited by NFPA 58	

[58:Table 6.21.3.1]

69.3.12.3.1.6 Containers designed for stationary service only and not in compliance with the container appurtenance protection requirements of 5.2.6 of NFPA 58 shall not be used. [58:6.21.3.1(F)]

69.3.12.3.2 ASME containers and cylinders utilized for the purposes covered by 69.3.12 shall not be installed, transported, or stored (even temporarily) inside any vehicle covered by 69.3.12, except for ASME containers installed in accordance with 69.3.12.3.4.8, Chapter 9 of NFPA 58, or DOT regulations. [58:6.21.3.2]

69.3.12.3.3 The LP-Gas supply system, including the containers, shall be installed either on the outside of the vehicle or in a recess or cabinet vaportight to the inside of the vehicle but accessible from and vented to the outside, with the vents located near the top and bottom of the enclosure and 3 ft (1 m) horizontally away from any opening into the vehicle below the level of the vents. [58:6.21.3.3]

69.3.12.3.4 Containers shall be mounted securely on the vehicle or within the enclosing recess or cabinet. [58:6.21.3.4]

69.3.12.3.4.1 Containers shall be installed with road clearance in accordance with 11.7.3 of NFPA 58. [58:6.21.3.4(A)]

69.3.12.3.4.2 Fuel containers shall be mounted to prevent jarring loose and slipping or rotating, and the fastenings shall be designed and constructed to withstand, without permanent visible deformation, static loading in any direction equal to four times the weight of the container filled with fuel. [58:6.21.3.4(B)]

69.3.12.3.4.3 Where containers are mounted within a vehicle housing, the securing of the housing to the vehicle shall comply with this provision. Any removable portions of the housing or cabinet shall be secured while in transit. [58:6.21.3.4(C)]

69.3.12.3.4.4 Field welding on containers shall be limited to attachments to nonpressure parts such as saddle plates, wear plates, or brackets applied by the container manufacturer. [58:6.21.3.4(D)]

69.3.12.3.4.5 All container valves, appurtenances, and connections shall be protected to prevent damage from accidental contacts with stationary objects, from loose objects, stones, mud, or ice thrown up from the ground or floor, and from damage due to overturn or similar vehicular accident. [58:6.21.3.4(E)]

69.3.12.3.4.6 Permanently mounted ASME containers shall be located on the vehicle to provide this protection. [58:6.21.3.4(F)]

69.3.12.3.4.7 Cylinders shall have permanent protection for cylinder valves and connections. [58:6.21.3.4(G)]

69.3.12.3.4.8 Where cylinders are located on the outside of a vehicle, weather protection shall be provided. [58:6.21.3.4(H)]

69.3.12.3.4.9 Containers mounted on the interior of passenger-carrying vehicles shall be installed in compliance with Section 11.8 of NFPA 58. Pressure relief valve installations for such containers shall comply with 11.7.5 of NFPA 58. [58:6.21.3.4(I)]

69.3.12.3.5 Cylinders installed on portable tar kettles alongside the kettle, on the vehicle frame, or on road surface heating equipment shall be protected from radiant or convected heat from open flame or other burners by the use of a heat shield or by the location of the cylinder(s) on the vehicle. In addition, the following shall apply:

(1) Cylinder valves shall be closed when burners are not in use.
(2) Cylinders shall not be refilled while burners are in use as provided in 7.2.3.2(B) of NFPA 58. [58:6.21.3.5]

69.3.12.4 Installation of Container Appurtenances.

69.3.12.4.1 Container appurtenances shall be installed in accordance with the following:

(1) Pressure relief valve installation on ASME containers installed in the interior of vehicles complying with Section 11.8 of NFPA 58 shall comply with 11.7.5 of NFPA 58.
(2) Pressure relief valve installations on ASME containers installed on the outside of vehicles shall comply with 11.7.5 and 6.21.3.3 of NFPA 58.
(3) Main shutoff valves on containers for liquid and vapor shall be readily accessible.
(4) Cylinders shall be designed to be filled in either the vertical or horizontal position, or if they are the universal type, they are permitted to be filled in either position.
(5) All container inlets, outlets, or valves installed in container inlets or outlets, except pressure relief devices and gauging devices, shall be labeled to designate whether they communicate with the vapor or liquid space.
(6) Containers from which only vapor is to be withdrawn shall be installed and equipped with connections to minimize the possibility of the accidental withdrawal of liquid. [58:6.21.4.1]

69.3.12.4.2 Regulators shall be installed in accordance with 6.7.2 of NFPA 58 and 69.3.12.4.2.1 through 69.3.12.4.2.5. [58:6.21.4.2]

69.3.12.4.2.1 Regulators shall be installed with the pressure relief vent opening pointing vertically downward to allow for drainage of moisture collected on the diaphragm of the regulator. [58:6.21.4.2(A)]

69.3.12.4.2.2 Regulators not installed in compartments shall be equipped with a durable cover designed to protect the regulator vent opening from sleet, snow, freezing rain, ice, mud, and wheel spray. [58:6.21.4.2(B)]

69.3.12.4.2.3 If vehicle-mounted regulators are installed at or below the floor level, they shall be installed in a compartment that provides protection against the weather and wheel spray. [58:6.21.4.2(C)]

69.3.12.4.2.4 Regulator compartments shall comply with the following:

(1) The compartment shall be of sufficient size to allow tool operation for connection to and replacement of the regulators(s).
(2) The compartment shall be vaportight to the interior of the vehicle.
(3) The compartment shall have a 1 in.^{2} (650 mm^2) minimum vent opening to the exterior located within 1 in. (25 mm) of the bottom of the compartment.
(4) The compartment shall not contain flame or spark-producing equipment. [58:6.21.4.2(D)]

69.3.12.4.2.5 A regulator vent outlet shall be at least 2 in. (51 mm) above the compartment vent opening. [58:6.21.4.2(E)]

69.3.12.5 Piping.

69.3.12.5.1 Piping shall be installed in accordance with 6.8.3 of NFPA 58 and 69.3.12.5.1.1 through 69.3.12.5.1.13. [58:6.21.5.1]

69.3.12.5.1.1 Steel tubing shall have a minimum wall thickness of 0.049 in. (1.2 mm). [58:6.21.5.1(A)]

69.3.12.5.1.2 A flexible connector shall be installed between the regulator outlet and the piping system to protect against expansion, contraction, jarring, and vibration strains. [58:6.21.5.1(B)]

69.3.12.5.1.3 Flexibility shall be provided in the piping between a cylinder and the gas piping system or regulator. [58:6.21.5.1(C)]

69.3.12.5.1.4 Flexible connectors shall be installed in accordance with 6.8.7 of NFPA 58. [58:6.21.5.1(D)]

69.3.12.5.1.5 Flexible connectors of more than 36 in. (0.9 m) overall length, or fuel lines that incorporate hose, shall be used only with the approval of the authority having jurisdiction. [58:6.21.5.1(E)]

69.3.12.5.1.6 The piping system shall be designed, installed, supported, and secured to minimize the possibility of damage due to vibration, strains, or wear and to preclude any loosening while in transit. [58:6.21.5.1(F)]

69.3.12.5.1.7 Piping shall be installed in a protected location. [58:6.21.5.1(G)]

69.3.12.5.1.8 Where piping is installed outside the vehicle, it shall be installed as follows:

(1) Piping shall be under the vehicle and below any insulation or false bottom.
(2) Fastening or other protection shall be installed to prevent damage due to vibration or abrasion.
(3) At each point where piping passes through sheet metal or a structural member, a rubber grommet or equivalent protection shall be installed to prevent chafing. [58:6.21.5.1(H)]

69.3.12.5.1.9 Gas piping shall be installed to enter the vehicle through the floor directly beneath or adjacent to the appliance served. [58:6.21.5.1(I)]

69.3.12.5.1.10 If a branch line is installed, the tee connection shall be located in the main gas line under the floor and outside the vehicle. [58:6.21.5.1(J)]

69.3.12.5.1.11 Exposed parts of the piping system either shall be of corrosion-resistant material or shall be coated or protected to minimize exterior corrosion. [58:6.21.5.1(K)]

69.3.12.5.1.12 Hydrostatic relief valves shall be installed in isolated sections of liquid piping as provided in Section 6.11 of NFPA 58. [58:6.21.5.1(L)]

69.3.12.5.1.13 Piping systems, including hose, shall be pressure tested and proven free of leaks in accordance with Section 6.12 of NFPA 58. [58:6.21.5.1(M)]

69.3.12.5.2 There shall be no fuel connection between a tractor and trailer or other vehicle units. [58:6.21.5.2]

69.3.12.6 Equipment Installation. Equipment shall be installed in accordance with Section 6.15 of NFPA 58 and 69.3.12.6.1 and 69.3.12.6.2. [58:6.21.6]

69.3.12.6.1 Installation shall be made in accordance with the manufacturer's recommendations and, in the case of approved equipment, as provided in the approval. [58:6.21.6.1]

69.3.12.6.2 Equipment installed on vehicles shall be protected against vehicular damage as provided for container appurtenances and connections in 6.21.3.4(C) of NFPA 58. [58:6.21.6.2]

69.3.12.7 Appliance Installation.

69.3.12.7.1 Paragraph 69.3.12.7 shall apply to the installation of all appliances on vehicles. It shall not apply to engines. [58:6.21.7.1]

69.3.12.7.2 All appliances covered by this subparagraph installed on vehicles shall be approved. [58:6.21.7.2]

69.3.12.7.3 Where the device or appliance is designed to be in operation while the vehicle is in transit, such as a cargo heater or cooler, means to stop the flow of gas in the event of a line break, such as an excess-flow valve, shall be installed. [58:6.21.7.3]

69.3.12.7.4 All gas-fired heating appliances shall be equipped with safety shutoffs in accordance with 5.18.7(A) of NFPA 58 except those covered in 6.18.2.8(2) of NFPA 58. [58:6.21.7.4]

69.3.12.7.5 Gas-fired heating appliances, other than ranges and illuminating appliances installed on vehicles intended for human occupancy, shall be designed or installed to provide for a complete separation of the combustion system from the atmosphere inside the vehicle. [58:6.21.7.5]

69.3.12.7.6* Where unvented type heaters that are designed to protect cargo are used on vehicles not intended for human occupancy, provisions shall be made to provide air from the outside for combustion and dispose of the products of combustion to the outside. [58:6.21.7.6]

69.3.12.7.7 Appliances installed in the cargo space of a vehicle shall be readily accessible whether the vehicle is loaded or empty. [58:6.21.7.7]

69.3.12.7.8 Appliances shall be constructed or otherwise protected to minimize possible damage or impaired operation due to cargo shifting or handling. [58:6.21.7.8]

69.3.12.7.9 Appliances shall be located so that a fire at any appliance will not block egress of persons from the vehicle. [58:6.21.7.9]

69.3.12.7.10 A permanent caution plate shall be provided, affixed to either the appliance or the vehicle outside of any enclosure and adjacent to the container(s), and shall include the following items:

CAUTION:

(1) Be sure all appliance valves are closed before opening container valve.
(2) Connections at the appliances, regulators, and containers shall be checked periodically for leaks with soapy water or its equivalent.
(3) Never use a match or flame to check for leaks.
(4) Container valves shall be closed when equipment is not in use. [58:6.21.7.10]

69.3.12.8 General Precautions. Mobile units containing hotplates and other cooking equipment, including mobile kitchens and catering vehicles, shall be provided with at least one approved portable fire extinguisher rated in accordance with NFPA 10 at not less than 10-B:C. Where fire extinguishers have more than one letter classification, they can be considered to satisfy the requirements of each letter class. [58:6.21.8]

69.3.12.9 Parking, Servicing, and Repair.

69.3.12.9.1 Vehicles with LP-Gas fuel systems mounted on them for purposes other than propulsion shall be permitted to be parked, serviced, or repaired inside buildings in accordance with the following:

(1) The fuel system shall be leak-free, and the container(s) shall not be filled beyond the limits specified in Chapter 7 of NFPA 58.
(2) The container shutoff valve shall be closed, except that the container shutoff valve shall not be required to be closed when fuel is required for test or repair.
(3) The vehicle shall not be parked near sources of heat, open flames, or similar sources of ignition, or near unventilated pits. [**58:**6.21.9.1]

69.3.12.9.2 Vehicles having containers with water capacities larger than 300 gal (1.1 m^3) shall comply with the requirements of Section 9.7 of NFPA 58. [**58:**6.21.9.2]

69.3.13 Vehicle Fuel Dispenser and Dispensing Stations.

69.3.13.1 Application.

69.3.13.1.1 Subsection 69.3.13 includes location, installation, and operation of vehicle fuel dispensers and dispensing stations. [**58:**6.22.1.1]

69.3.13.1.2 The provisions of Sections 6.2 and 6.3 of NFPA 58, as modified by 69.3.13, shall apply. [**58:**6.22.1.2]

69.3.13.2 Location.

69.3.13.2.1 Location of vehicle fuel dispensers and dispensing stations shall be in accordance with Table 69.3.5.3. [**58:**6.22.2.1]

69.3.13.2.2 Vehicle fuel dispensers and dispensing stations shall be located away from pits in accordance with Table 69.3.5.3 with no drains or blow-offs from the unit directed toward or within 15 ft (4.6 m) of a sewer system's opening. [**58:**6.22.2.2]

69.3.13.3 General Installation Provisions.

69.3.13.3.1 Vehicle fuel dispensers and dispensing stations shall be installed in accordance with the manufacturer's installation instructions. [**58:**6.22.3.1]

69.3.13.3.2 Vehicle fuel dispensers and dispensing stations shall not be located within a building, except as allowed in Chapter 10 of NFPA 58. [**58:**6.22.3.2]

69.3.13.3.3 Where a vehicle fuel dispenser is installed under a weather shelter or canopy, the area shall be ventilated and shall not be enclosed for more than 50 percent of its perimeter. [**58:**6.22.3.3]

69.3.13.3.4 Control for the pump used to transfer LP-Gas through the unit into containers shall be provided at the device in order to minimize the possibility of leakage or accidental discharge. [**58:**6.22.3.4]

69.3.13.3.5 An excess-flow check valve or a differential back pressure valve shall be installed in or on the dispenser at the point at which the dispenser hose is connected to the liquid piping. [**58:**6.22.3.5]

69.3.13.3.6 Piping and the dispensing hose shall be provided with hydrostatic relief valves in accordance with Section 6.11 of NFPA 58. [**58:**6.22.3.6]

69.3.13.3.7 Protection against trespassing and tampering shall be in accordance with 6.16.5 of NFPA 58. [**58:**6.22.3.7]

69.3.13.3.8 A manual shutoff valve and an excess-flow check valve shall be located in the liquid line between the pump and dispenser inlet where the dispensing device is installed at a remote location and is not part of a complete storage and dispensing unit mounted on a common base. [**58:**6.22.3.8]

69.3.13.3.9 All dispensers either shall be installed on a concrete foundation or shall be part of a complete storage and dispensing unit mounted on a common base and installed in accordance with 6.6.3.1(G) of NFPA 58. Protection against physical damage shall be provided for dispensers. [**58:**6.22.3.9]

69.3.13.3.10 A listed quick-acting shutoff valve shall be installed at the discharge end of the transfer hose. [**58:**6.22.3.10]

69.3.13.3.11 An identified and accessible switch or circuit breaker shall be installed at a location not less than 20 ft (6.1 m) or more than 100 ft (30.5 m) from the dispensing device(s) to shut off the power in the event of a fire, accident, or other emergency. [**58:**6.22.3.11]

69.3.13.3.12 The markings for the switches or breakers shall be visible at the point of liquid transfer. [**58:**6.22.3.12]

69.3.13.4 Installation of Vehicle Fuel Dispensers.

69.3.13.4.1 Hoses shall comply with the following:

(1) Hose length shall not exceed 18 ft (5.5 m) unless approved by the AHJ.
(2) All hoses shall be listed.
(3) When not in use, hoses shall be secured to protect them from damage. [**58:**6.22.4.1]

69.3.13.4.2 A listed emergency breakaway device complying with UL 567, *Standard Pipe Connectors for Flammable and Combustible Liquids and LP-Gas,* and designed to retain liquid on both sides of the breakaway point, or other devices affording equivalent protection approved by the AHJ, shall be installed. [**58:**6.22.4.2]

69.3.13.4.3 Dispensing devices for LP-Gas shall be located as follows:

(1) Conventional systems shall be at least 10 ft (3.0 m) from any dispensing device for Class I liquids.
(2) Low-emission transfer systems in accordance with Section 6.24 of NFPA 58 shall be at least 5 ft (1.5 m) from any dispensing device for Class I liquids. [**58:**6.22.4.3]

69.4 LP-Gas Liquid Transfer.

69.4.1* Scope.

69.4.1.1 Section 69.4 applies to transfers of liquid LP-Gas from one container to another wherever this transfer involves connections and disconnections in the transfer system or the venting of LP-Gas to the atmosphere. [**58:**7.1.1]

69.4.1.2 Section 69.4 also applies to operational safety and methods for determining the quantity of LP-Gas permitted in containers. [**58:**7.1.2]

69.4.2 Operational Safety.

69.4.2.1 Transfer Personnel.

69.4.2.1.1 Transfer operations shall be conducted by qualified personnel meeting the provisions of Section 4.4 of NFPA 58. [**58:**7.2.1.1]

69.4.2.1.2 At least one qualified person shall remain in attendance at the transfer operation from the time connections are made until the transfer is completed, shutoff valves are closed, and lines are disconnected. [58:7.2.1.2]

69.4.2.1.3 Transfer personnel shall exercise precaution to ensure that the LP-Gases transferred are those for which the transfer system and the containers to be filled are designed. [58:7.2.1.3]

69.4.2.2 Filling and Evacuating Containers.

69.4.2.2.1 Transfer of LP-Gas to and from a container shall be accomplished only by qualified persons trained in proper handling and operating procedures meeting the requirements of Section 4.4 of NFPA 58 and in emergency response procedures. [58:7.2.2.1]

69.4.2.2.2 When noncompliance with Section 5.2 and Section 5.7 of NFPA 58 is found, the container owner and user shall be notified in writing. [58:7.2.2.2]

69.4.2.2.3 Injection of compressed air, oxygen, or any oxidizing gas into containers to transfer LP-Gas liquid shall be prohibited. [58:7.2.2.3]

69.4.2.2.4 When evacuating a container owned by others, the qualified person(s) performing the transfer shall not inject any material other than LP-Gas into the container. [58:7.2.2.4]

69.4.2.2.5 Valve outlets on cylinders of 108 lb (49 kg) water capacity [nominal 45 lb (20 kg) propane capacity] or less shall be equipped with an effective seal such as a plug, cap, listed quick-closing coupling, or a listed quick-connect coupling. [58:7.2.2.5]

69.4.2.2.6 Valve outlet seals shall be in place whenever the cylinder is not connected for use. [58:7.2.2.6]

69.4.2.2.7 Nonrefillable (disposable) and new unused cylinders shall not be required to be equipped with valve outlet seals. [58:7.2.2.7]

69.4.2.2.8 Containers shall be filled only after determination that they comply with the design, fabrication, inspection, marking, and requalification provisions of NFPA 58. [58:7.2.2.8]

69.4.2.2.9 "Single trip," "nonrefillable," or "disposable" cylinders shall not be refilled with LP-Gas. [58:7.2.2.9]

69.4.2.2.10 Containers shall comply with the following with regard to service or design pressure requirements:

(1) The service pressure marked on the cylinder shall be not less than 80 percent of the vapor pressure of the LP-Gas for which the cylinder is designed at 130°F (54.4°C).
(2) The minimum design pressure for ASME containers shall be in accordance with Table 5.2.4.2 of NFPA 58. [58:7.2.2.10]

69.4.2.2.11 Transfer of refrigerated product shall be made only into systems that are designed to accept refrigerated product. [58:7.2.2.11]

69.4.2.2.12 A container shall not be filled if the container assembly does not meet the requirements for continued service. [58:7.2.2.12]

69.4.2.2.13 Transfer hoses larger than ½ in. (12 mm) internal diameter shall not be used for making connections to individual cylinders being filled indoors. [58:7.2.2.13]

69.4.2.3 Arrangement and Operation of Transfer Systems.

69.4.2.3.1 Public access to areas where LP-Gas is stored and transferred shall be prohibited except where necessary for the conduct of normal business activities. [58:7.2.3.1]

69.4.2.3.2 Sources of ignition shall be turned off during transfer operations, while connections or disconnections are made, or while LP-Gas is being vented to the atmosphere. [58:7.2.3.2]

69.4.2.3.2.1 Internal combustion engines within 15 ft (4.6 m) of a point of transfer shall be shut down while such transfer operations are in progress, with the exception of the following:

(1) Engines of LP-Gas cargo tank vehicles constructed and operated in compliance with Chapter 9 of NFPA 58 while such engines are driving transfer pumps or compressors on these vehicles to load containers in accordance with 6.5.4 of NFPA 58
(2) Engines installed in buildings as provided in Section 11.12 of NFPA 58 [58:7.2.3.2(A)]

69.4.2.3.2.2 Smoking, open flame, portable electrical tools, and extension lights capable of igniting LP-Gas shall not be permitted within 25 ft (7.6 m) of a point of transfer while filling operations are in progress. [58:7.2.3.2(B)]

69.4.2.3.2.3 Metal cutting, grinding, oxygen–fuel gas cutting, brazing, soldering, or welding shall not be permitted within 35 ft (10.7 m) of a point of transfer while filling operations are in progress. [58:7.2.3.2(C)]

69.4.2.3.2.4 Materials that have been heated above the ignition temperature of LP-Gas shall be cooled before that transfer is started. [58:7.2.3.2(D)]

69.4.2.3.2.5 Sources of ignition shall be turned off during the filling of any LP-Gas container on the vehicle. [58:7.2.3.2(E)]

69.4.2.3.3 Cargo tank vehicles unloading into storage containers shall be at least 10 ft (3.0 m) from the container and so positioned that the shutoff valves on both the truck and the container are readily accessible. [58:7.2.3.3]

69.4.2.3.4 The cargo tank vehicle shall not transfer LP-Gas into dispensing station storage while parked on a public way. [58:7.2.3.4]

69.4.3 Venting LP-Gas to the Atmosphere.

69.4.3.1 General. LP-Gas in either liquid or vapor form shall not be vented to the atmosphere unless it is vented under the following conditions:

(1) Venting of LP-Gas shall be permitted where the maximum flow from fixed liquid level, rotary, or slip tube gauges does not exceed that from a No. 54 drill orifice.
(2) Venting of LP-Gas between shutoff valves before disconnecting the liquid transfer line from the container shall be permitted.
(3) Venting of LP-Gas, where necessary, shall be permitted to be performed by the use of bleeder valves.
(4) Venting of LP-Gas shall be permitted for the purposes described in 69.4.3.1(1) and 69.4.3.1(2) within structures designed for container filling in accordance with Chapter 10 of NFPA 58.
(5) Venting of LP-Gas listed liquid transfer pumps using such vapor as a source of energy shall be permitted where the rate of discharge does not exceed the discharge from a No. 31 drill size orifice.

(6) Venting of LP-Gas for purging in accordance with 7.3.2 of NFPA 58 shall be permitted.
(7) Venting of LP-Gas shall be permitted for emergencies.
(8) Venting of LP-Gas vapor utilized as the pressure source in remote shutdown systems for internal valves and emergency shutoff valves shall be permitted. [58:7.3.1]

69.5 Storage of Cylinders Awaiting Use, Resale, or Exchange.

69.5.1 Scope.

69.5.1.1 The provisions of Section 69.5 apply to the storage of cylinders of 1000 lb (454 kg) water capacity or less, whether filled, partially filled, or empty as follows:

(1) At consumer sites or dispensing stations, where not connected for use
(2) In storage for resale or exchange by dealer or reseller [58:8.1.1]

69.5.1.2 Section 69.5 does not apply to new or unused cylinders. [58:8.1.2]

69.5.1.3 Section 69.5 does not apply to cylinders stored at bulk plants. [58:8.1.3]

69.5.2 General Provisions.

69.5.2.1 General Location of Cylinders.

69.5.2.1.1 Cylinders in storage shall be located to minimize exposure to excessive temperature rises, physical damage, or tampering. [58:8.2.1.1]

69.5.2.1.2 Cylinders in storage having individual water capacity greater than 2.7 lb (1.1 kg) [nominal 1 lb (0.45 kg) LP-Gas capacity] shall be positioned so that the pressure relief valve is in direct communication with the vapor space of the cylinder. [58:8.2.1.2]

69.5.2.1.3 Cylinders stored in buildings in accordance with Section 8.3 of NFPA 58 shall not be located near exits, stairways, or in areas normally used, or intended to be used, for the safe egress of occupants. [58:8.2.1.3]

69.5.2.1.4 If empty cylinders that have been in LP-Gas service are stored indoors, they shall be considered as full cylinders for the purposes of determining the maximum quantities of LP-Gas permitted by 8.3.1, 8.3.2.1, and 8.3.3.1 of NFPA 58. [58:8.2.1.4]

69.5.2.1.5 Cylinders shall not be stored on roofs. [58:8.2.1.5]

69.5.2.2 Protection of Valves on Cylinders in Storage.

69.5.2.2.1 Cylinder valves shall be protected as required by 5.2.6.1 and 7.2.2.5 of NFPA 58. [58:8.2.2.1]

69.5.2.2.2 Screw-on-type caps or collars shall be in place on all cylinders stored, regardless of whether they are full, partially full, or empty, and cylinder outlet valves shall be closed. [58:8.2.2.2]

69.5.2.2.3 Valve outlets on cylinders less than 108 lb (49 kg) water capacity [nominal 45 lb (20 kg) propane capacity] shall be plugged, capped, or sealed in accordance with 7.2.2.5 of NFPA 58. [58:8.2.2.3]

69.5.3 Storage Within Buildings.

69.5.3.1 Storage of cylinders in buildings shall be in accordance with Table 69.5.3.1(a) or Table 69.5.3.1(b) or the requirements of 69.5.3. [58:8.3.1]

69.5.3.2 Storage Within Buildings Frequented by the Public and in Residential Occupancies.

69.5.3.2.1 The quantity of LP-Gas in cylinders stored or displayed shall not exceed 200 lb (91 kg) in buildings frequented by the public. [58:8.3.2.1]

69.5.3.2.2 The cylinders shall not exceed a water capacity of 2.7 lb (1.1 kg) [nominal 1 lb (0.45 kg) LP-Gas]. [58:8.3.2.2]

69.5.3.2.3 Storage in restaurants and at food service locations of 10 oz (283 g) butane nonrefillable containers shall be limited to no more than 24 containers and an additional twenty-four 10 oz (283 g) butane nonrefillable containers stored in another location within the building where constructed with at least a 2-hour fire wall protection. [58:8.3.2.3]

69.5.3.3 Storage Within Buildings Not Frequented by the Public.

69.5.3.3.1 The maximum quantity of LP-Gas allowed in one storage location shall not exceed 735 lb (334 kg) water capacity [nominal 300 lb (136 kg) LP-Gas capacity]. [58:8.3.3.1]

69.5.3.3.2 Where additional storage locations are required on the same floor within the same building, they shall be separated by a minimum of 300 ft (91.4 m). [58:8.3.3.2]

69.5.3.3.3 Storage beyond the limitations described in 69.5.3.3.2 shall comply with 69.5.3.4. [58:8.3.3.3]

69.5.3.3.4 Cylinders carried as part of the service equipment on highway mobile vehicles shall not be part of the total storage capacity in the requirements of 69.5.3.3.1, where such vehicles are stored in private garages and carry no more than three cylinders with a total aggregate capacity per vehicle not exceeding 100 lb (45.4 kg) of LP-Gas. [58:8.3.3.4]

69.5.3.3.5 Cylinder valves shall be closed when not in use. [58:8.3.3.5]

69.5.3.4 Storage Within Special Buildings or Rooms.

69.5.3.4.1 The maximum quantity of LP-Gas stored in special buildings or rooms shall be 10,000 lb (4540 kg). [58:8.3.4.1]

69.5.3.4.2 Special buildings or rooms for storing LP-Gas cylinders shall not be located where the buildings or rooms adjoin the line of property occupied by schools, churches, hospitals, athletic fields, or other points of public gathering. [58:8.3.4.2]

69.5.3.4.3 The construction of all such special buildings and rooms shall comply with Chapter 10 of NFPA 58 and the following:

(1) Vents to the outside only shall be provided at both the top and bottom of the building and shall be located at least 5 ft (1.5 m) from any building opening.
(2) The entire area shall be classified for purposes of ignition source control in accordance with Section 6.20 of NFPA 58. [58:8.3.4.3]

69.5.3.5 Storage Within Residential Buildings. Storage of cylinders within a residential building, including the basement or any storage area in a common basement storage area in multiple-family buildings and attached garages, shall be limited to cylinders each with a maximum water capacity of 2.7 lb (1.2 kg) and shall not exceed 5.4 lb (2.4 kg) aggregate water capacity for smaller cylinders per each living space unit. [58:8.3.5]

69.5.4 Storage Outside of Buildings.

69.5.4.1* Location of Storage Outside of Buildings.

69.5.4.1.1 Storage outside of buildings for cylinders awaiting use, resale, or part of a cylinder exchange point shall be located as follows:

Table 69.5.3.1(a) Maximum Allowable Storage Quantities of LP-Gas in Other Than Industrial, Storage, and Mercantile Occupancies

Occupancy	Assembly	Educational	Day Care	Health Care	Ambulatory Health Care	Detention and Correctional	One- and Two-Family Dwellings	Lodging or Rooming House	Hotel and Dormitory	Apartment	Residential Board and Care	Business
Maximum Allowable Quantity:												
Storage (state units: lbs, gals, etc.)	2	2	2	2	2	2	2 lb	2 lb	2	2 lb	2	2
MAQ increases for:							Max 1 lb cylinders			1 lb cyl		
Total incl. cabinets	2	2	2	2	2	2	2 lb	2 lb	2	2	2	2
Total for suppression	2	2	2	2	2	2	2 lb	2 lb	2	2	2	2
Total for both cabinets and suppression	0	2	2	2	2	2	2	2	2	2	2	2
Attended catered food service per 58 in 10 oz max cylinders	15 lb	15 lb	15 lb	15 lb	15 lb	15 lb	15 lb	15 lb	15 lb	15 lb	15 lb	15 lb
			15 lb	15 lb	15 lb	15 lb	15 lb	15 lb	15 lb	15 lb	15 lb	15 lb
Add'l 10 oz cylinders w/ 2 hr fire wall	15 lb	15 lb	15 lb	15 lb	15 lb	15 lb	15 lb	15 lb	15 lb	15 lb	15 lb	15 lb
Other												
Total (including threshold) for other	20 lb	20 lb	0	5 lb								
	Flame effects NFPA 160. Add'l 20 lb units with 20 ft sep.	In labs not in classrooms. Add'l 20 lb units with 20 ft sep.		In labs only. Add'l 5 lb units with 20 ft sep.						Amts. per dwelling		

[58:Table 8.3.1(a)]

(1) At least 5 ft (1.5 m) from any doorway or opening in a building frequented by the public where occupants have at least two means of egress as defined by NFPA *101*
(2) At least 10 ft (3 m) from any doorway or opening in a building or sections of a building that has only one means of egress
(3) At least 20 ft (6.1 m) from any automotive service station fuel dispenser [58:8.4.1.1]

69.5.4.1.2 Distances from cylinders in storage outside buildings shall be in accordance with Table 69.5.4.1.2 with respect to the following:

(1) Nearest important building or group of buildings
(2) Line of adjoining property that can be built upon
(3) Busy thoroughfares or sidewalks
(4) Line of adjoining property occupied by schools, churches, hospitals, athletic fields, or other points of public gathering
(5) Dispensing station [58:8.4.1.2]

69.5.4.1.3 Cylinders in the filling process shall not be considered to be in storage. [58:8.4.1.3]

69.5.4.2 Protection of Cylinders.

69.5.4.2.1 Cylinders at a location open to the public shall be protected by either of the following:

(1) An enclosure in accordance with 6.16.5.2 of NFPA 58
(2) A lockable ventilated metal locker or rack that prevents tampering with valves and pilferage of the cylinders [58:8.4.2.1]

Table 69.5.3.1(b) Maximum Allowable Storage Quantities of LP-Gas in Mercantile, Industrial, and Storage Occupancies

Occupancy	Mercantile	Industrial	Storage
Maximum Allowable Quantity: Storage (state units: lbs, gals, etc.)	200 (1 lb max/cyl.)	300	300
MAQ increases for: Total (including threshold) for cabinets	200	300	300
Total (including threshold) for suppression	200	300	300
Total (including threshold) for both cabinets and suppression	200	300	300
Total (including threshold) for other (describe)		Add'l 300 lb	10,000 lb
		300 ft separation	In special rooms or bldgs per Chapter 10 of NFPA 58

[58:Table 8.3.1(b)]

Table 69.5.4.1.2 Distances from Cylinders in Storage and Exposures

Quantity of LP-Gas Stored		Horizontal Distance to ...					
		(1) and (2)		(3) and (4)		(5)	
lb	kg	ft	m	ft	m	ft	m
≤720	≤227	0	0	0	0	5	1.5
721 to 2500	227+ to 1134	0	0	10	3	10	3
2501 to 6000	1134+ to 2721	10	3	10	3	10	3
6001 to 10,000	2721+ to 4540	20	6.1	20	6.1	20	6.1
>10,000	>4540	25	7.6	25	7.6	25	7.6

[58:Table 8.4.1.2]

69.5.4.2.2* Protection against vehicle impact shall be provided in accordance with good engineering practice where vehicle traffic is expected at the location. [58:8.4.2.2]

69.5.4.3 Alternate Location and Protection of Storage. Where the provisions of 69.5.4.1 and 69.5.4.2 are impractical at construction sites or at buildings or structures undergoing major renovation or repairs, alternate storage of cylinders shall be acceptable to the AHJ. [58:8.4.3]

69.5.5* Fire Protection.

69.5.5.1 Storage locations, where the aggregate quantity of propane stored is in excess of 720 lb (327 kg), shall be provided with at least one approved portable fire extinguisher having a minimum capacity of 18 lb (9.2 kg) dry chemical with B:C rating. [58:8.5.1]

69.5.5.2 The required fire extinguisher shall be located no more than 50 ft (15 m) from the storage location. Where fire extinguishers have more than one letter classification, they can be considered to satisfy the requirements of each letter class. [58:8.5.2]

69.6 Vehicular Transportation of LP-Gas.

69.6.1 Transportation in Portable Containers.

69.6.1.1 Transportation of Cylinders.

69.6.1.1.1 Cylinders having an individual water capacity not exceeding 1000 lb (454 kg) [nominal 420 lb (191 kg) LP-Gas capacity], when filled with LP-Gas, shall be transported in accordance with the requirements of 69.6.1. [58:9.3.2.1]

69.6.1.1.2 Cylinders shall be constructed as provided in Section 5.3 of NFPA 58 and equipped in accordance with Section 5.3 of NFPA 58 for transportation as cylinders. [58:9.3.2.2]

69.6.1.1.3 The quantity of LP-Gas in cylinders shall be in accordance with Chapter 7 of NFPA 58. [58:9.3.2.3]

69.6.1.1.4 Cylinder valves shall comply with the following:

(1) Valves of cylinders shall be protected in accordance with 5.2.6.1 of NFPA 58.
(2) Screw-on-type protecting caps or collars shall be secured in place.
(3) The provisions of 7.2.2.5 of NFPA 58 shall apply. [58:9.3.2.4]

69.6.1.1.5 The cargo space of the vehicle shall be isolated from the driver's compartment, the engine, and its exhaust system. Open-bodied vehicles shall be considered to be in compliance with this provision. [58:9.3.2.5]

69.6.1.1.5.1 Closed-bodied vehicles having separate cargo, driver, and engine compartments shall also be considered to be in compliance with this provision. [58:9.3.2.5(A)]

69.6.1.1.5.2 Closed-bodied vehicles such as passenger cars, vans, and station wagons shall not be used for transporting more than 215 lb (98 kg) water capacity [nominal 90 lb (41 kg) LP-Gas capacity] but not more than 108 lb (49 kg) water capacity [nominal 45 lb (20 kg) LP-Gas capacity] per cylinder unless the driver and engine compartments are separated from the cargo space by a vaportight partition that contains no means of access to the cargo space. [58:9.3.2.5(B)]

69.6.1.1.6 Cylinders and their appurtenances shall be determined to be leak-free before being loaded into vehicles. [58:9.3.2.6]

69.6.1.1.7 Cylinders shall be loaded into vehicles with flat floors or equipped with racks for holding cylinders. [58:9.3.2.7]

69.6.1.1.8 Cylinders shall be fastened in position to minimize the possibility of movement, tipping, and physical damage. [58:9.3.2.8]

69.6.1.1.9 Cylinders being transported by vehicles shall be positioned in accordance with Table 69.6.1.1.9. [58:9.3.2.9]

69.6.1.1.10 Vehicles transporting cylinders where the total weight is more than 1000 lb (454 kg), including the weight of the LP-Gas and the cylinders, shall be placarded as required by DOT regulations or state law. [58:9.3.2.10]

Table 69.6.1.1.9 Orientation of Cylinders on Vehicles

Propane Capacity of Cylinder			
lb	m^3	Open Vehicles	Enclosed Spaces of Vehicles
≤45	0.17	Any position	
>45	0.17	Relief valve in communication with the vapor space	
≤4.2	0.016		Any position
>4.2	0.016		Relief valve in communication with the vapor space

[58:Table 9.3.2.9]

69.6.1.2 Fire Extinguishers. Each truck or trailer transporting portable containers in accordance with 69.6.1.1 or 9.3.3 of NFPA 58 shall be equipped with at least one approved portable fire extinguisher having a minimum capacity of 18 lb (8.2 kg) dry chemical with a B:C rating. Where fire extinguishers have more than one letter classification, they can be considered to satisfy the requirements of each letter class. [58:9.3.5]

69.6.2 Parking and Garaging Vehicles Used to Carry LP-Gas Cargo.

69.6.2.1 Application. Subsection 69.6.2 applies to the parking and garaging of vehicles used for the transportation of LP-Gas. [58:9.7.1]

69.6.2.2 Parking Outdoors.

69.6.2.2.1 Vehicles shall not be left unattended on any street, highway, avenue, or alley, except for necessary absences from the vehicle associated with drivers' normal duties, including stops for meals and rest stops during the day or night, except as follows:

(1) This requirement shall not apply in an emergency.
(2) This requirement shall not apply to vehicles parked in accordance with 69.6.2.2.3 and 69.6.2.2.4. [58:9.7.2.1]

69.6.2.2.2 Vehicles shall not be parked in congested areas. [58:9.7.2.2]

69.6.2.2.3 Where vehicles are parked off the street in uncongested areas, they shall be at least 50 ft (15 m) from any building used for assembly, institutional, or multiple residential occupancy. [58:9.7.2.3]

69.6.2.2.4 Where vehicles carrying portable containers or cargo tank vehicles of 3500 gal (13 m^3) water capacity or less are parked on streets adjacent to the driver's residence in uncongested residential areas, the parking locations shall be at least 50 ft (15 m) from a building used for assembly, institutional, or multiple residential occupancy. [58:9.7.2.4]

69.6.2.3 Parking Indoors.

69.6.2.3.1 Cargo tank vehicles parked in any public garage or building shall have LP-Gas liquid removed from the following:

(1) Cargo tank
(2) Piping
(3) Pump
(4) Meter
(5) Hoses
(6) Related equipment [58:9.7.3.1]

69.6.2.3.2 Vehicles used to carry portable containers shall not be moved into any public garage or building for parking until all portable containers have been removed from the vehicle. [58:9.7.3.2]

69.6.2.3.3 The pressure in the delivery hose and related equipment shall be reduced to approximately atmospheric. [58:9.7.3.3]

69.6.2.3.4 All valves shall be closed before the vehicle is moved indoors. Delivery hose or valve outlets shall be plugged or capped before the vehicle is moved indoors. [58:9.7.3.4]

69.6.2.3.5 Vehicles carrying or containing LP-Gas shall only be parked in buildings complying with Chapter 10 of NFPA 58 and located on premises owned or under the control of the operator of such vehicles where the following provisions are met:

(1) The public shall be excluded from such buildings.
(2) Floor level ventilation shall be provided in all parts of the building where such vehicles are parked.
(3) Leaks in the vehicle LP-Gas systems shall be repaired before the vehicle is moved indoors.
(4) Primary shutoff valves on cargo tanks and other LP-Gas containers on the vehicle (except propulsion engine fuel containers) shall be closed and delivery hose outlets plugged or capped to contain system pressure before the vehicle is moved indoors.
(5) Primary shutoff valves on LP-Gas propulsion engine fuel containers shall be closed while the vehicle is parked.
(6) No LP-Gas container shall be located near a source of heat or within the direct path of hot air being blown from a blower-type heater.
(7) LP-Gas containers shall be gauged or weighed to determine that they are not filled beyond the maximum filling limit according to Section 7.4 of NFPA 58. [58:9.7.3.5]

69.6.2.3.6 Where vehicles are serviced or repaired indoors, the following shall apply:

(1) When it is necessary to move a vehicle into any building located on premises owned or operated by the operator of such vehicle for service on engine or chassis, the provisions of 69.6.2.3.5 shall apply.
(2) When it is necessary to move a vehicle carrying or containing LP-Gas into any public garage or repair facility for service on the engine or chassis, the provisions of 69.6.2.3.1 shall apply, or the driver or a qualified representative of an LP-Gas operator shall be in attendance at all times while the vehicle is indoors, and the following shall apply:
   (a) Leaks in the vehicle LP-Gas systems shall be repaired before the vehicle is moved indoors.
   (b) Primary shutoff valves on cargo tanks, portable containers, and other LP-Gas containers installed on the vehicle (other than propulsion engine fuel containers) shall be closed.
   (c) LP-Gas liquid shall be removed from the piping, pump, meter, delivery hose, and related equipment and the pressure therein reduced to approximately atmospheric before the vehicle is moved inside.
   (d) Delivery hose or valve outlets shall be plugged or capped before the vehicle is moved indoors.

(e) No container shall be located near a source of heat or within the direct path of hot air blown from a blower or from a blower-type heater.
(f) LP-Gas containers shall be gauged or weighed to determine that they are not filled beyond the maximum filling capacity in accordance with Section 7.4 of NFPA 58. [58:9.7.3.6]

69.6.2.3.7 If repair work or servicing is to be performed on a cargo tank vehicle system, all LP-Gas shall be removed from the cargo tank and piping, and the system shall be thoroughly purged before the vehicle is moved indoors. [58:9.7.3.7]

69.7 LP-Gases at Utility Plants. The design, construction, location, installation, and operation of refrigerated and nonrefrigerated liquefied petroleum gas systems at utility gas plants shall be in accordance with NFPA 59, *Utility LP-Gas Plant Code.*

69.8 Liquefied Natural Gas (LNG). The design, location, construction, and operation of liquified natural gas facilities shall be in accordance with NFPA 59A, *Standard for the Production, Storage, and Handling of Liquefied Natural Gas (LNG).*

Chapter 70 Oxidizers and Organic Peroxides

70.1 General.

70.1.1* The storage, use, and handling of solid and liquid oxidizers and organic peroxide formulations shall comply with the requirements of Chapter 70.

70.1.2 Permits. Permits, where required, shall comply with Section 1.12.

70.2 Liquid and Solid Oxidizers.

70.2.1 Application.

70.2.1.1* The storage, use, and handling of liquid and solid oxidizers shall comply with Section 70.2; NFPA 430, *Code for the Storage of Liquid and Solid Oxidizers*; and Section 60.1 and Section 60.2 of this *Code.*

70.2.1.2 Where the provisions of Section 70.2 or NFPA 430 conflict with the provisions of Chapter 60, the provisions of Section 70.2 and NFPA 430 shall apply.

70.2.1.3 The requirements of Section 70.2 shall not apply to the following:

(1) The storage of solid and liquid oxidizers for normal use on the premises of single-family dwellings
(2) Explosives or blasting agents, which are covered by NFPA 495, *Explosive Materials Code*; or to ammonium nitrate, which is covered in NFPA 490, *Code for the Storage of Ammonium Nitrate*; or to organic peroxides, which are covered in NFPA 432, *Code for the Storage of Organic Peroxide Formulations*

70.2.1.4 The quantity and arrangement limits of Section 70.2 shall not apply to the following:

(1) The storage of oxidizers at plants where oxidizers are manufactured
(2) Facilities that use ammonium perchlorate in the commercial manufacture of large-scale rocket motors

70.2.1.5 Existing buildings that do not comply with the requirements of Section 70.2 and NFPA 430 pertaining to types of construction, separation of buildings, and fixed fire protection shall be permitted to be used for storing oxidizers at the discretion of the AHJ, provided that the buildings do not constitute a distinct hazard to life or adjoining property.

70.2.2* Classification of Oxidizers. For the purpose of Section 70.2, oxidizers shall be classified according to the following:

(1) *Class 1.* An oxidizer that does not moderately increase the burning rate of combustible materials with which it comes into contact.
(2) *Class 2.* An oxidizer that causes a moderate increase in the burning rate of combustible materials with which it comes into contact.
(3) *Class 3.* An oxidizer that causes a severe increase in the burning rate of combustible materials with which it comes into contact.
(4) *Class 4.* An oxidizer that can undergo an explosive reaction due to contamination or exposure to thermal or physical shock and that causes a severe increase in the burning rate of combustible materials with which it comes into contact.

70.2.3 Classification of Storage Facilities. For the purpose of Section 70.2, storage facilities shall be classified according to the following:

(1)* *Segregated.* Storage in the same room or inside area but physically separated by distance from incompatible materials.
(2) *Cutoff.* Storage in the same building or inside area but physically separated from incompatible materials by partitions or walls, or storage in a fixed tank.
(3) *Detached.* Storage in either an open outside area or a separate building containing no incompatible materials and located away from all other structures.

70.2.4 Basic Requirements.

70.2.4.1 Hazard Management.

70.2.4.1.1 The design of a new or modified facility or a facility that has had a change of use or occupancy to handle or store oxidizers shall be submitted to the authority having jurisdiction. *(For existing structures, see Section 1.4 of NFPA 430.)* [430:4.1.1]

70.2.4.1.1.1 All new or existing facilities handling or storing oxidizers greater than 4000 lb (1814 kg) for Class 1 oxidizers, 1000 lb (454 kg) for Class 2 oxidizers, 200 lb (91 kg) for Class 3 oxidizers, and 10 lb (4.5 kg) for Class 4 oxidizers shall provide written notification to the authority having jurisdiction. [430:4.1.1.1]

70.2.4.1.2 No new or existing facility shall store materials in any occupancy covered by NFPA 430 over 36,000 lb (16,329 kg) for Class 1 oxidizers, 4500 lb (2041 kg) for Class 2 oxidizers, 2300 lb (1043 kg) for Class 3 oxidizers, and 10 lb (4.5 kg) for Class 4 oxidizers until a Hazardous Materials Management Plan (HMMP) has been completed and submitted to the authority having jurisdiction. [430:4.1.2]

70.2.4.1.2.1 The HMMP shall be reviewed and updated annually and when the facility is modified. [430:4.1.2.1]

70.2.4.1.2.2 The HMMP shall comply with the requirements of this *Code.* [430:4.1.2.2]

70.2.4.1.2.3 Training exercises according to the HMMP shall be conducted at least every 3 years in cooperation with local emergency organizations. [430:4.1.2.3]

70.2.4.1.2.4 The AHJ shall be notified immediately of any of the following:

(1) Release of oxidizers in excess of 100 lb (45.4 kg)
(2) Release of oxidizers that might pose a threat to people, property, or the environment
(3) Signs of reacting oxidizer, contaminated oxidizer, or package deterioration of more than 100 lb (45.4 kg) of oxidizer [430:4.1.2.4]

70.2.4.1.2.4.1 Manufacturing plants shall not be required to notify the AHJ of an accidental release unless it poses a threat to people, property, or the environment or when required by local, state, or federal law. [430:4.1.2.4.1]

70.2.4.1.2.5 The facility responsible for an accidental release shall activate the HMMP immediately. [430:4.1.2.5]

70.2.4.1.3 No facility shall close or abandon any oxidizer storage facility without notifying the AHJ at least 30 days prior to the scheduled closing. [430:4.1.3]

70.2.4.2 Identification of Materials in Storage.

70.2.4.2.1* All storage areas containing oxidizers shall be conspicuously identified as to the hazard class by the words "Class *[appropriate classification number]* Oxidizers," as defined in 3.3.173. [430:4.2.1]

70.2.4.2.2 Oxidizers in mercantile display areas shall not be required to be identified in accordance with 70.2.4.2.1. [430:4.2.2]

70.2.4.2.3 Where oxidizers having different classifications are stored in the same area, the area shall be marked for the most severe hazard class present. [430:4.2.3]

70.2.4.2.4 All packages shall be approved and individually marked with the chemical name of the oxidizer. [430:4.2.4]

70.2.4.3 Storage Arrangements.

70.2.4.3.1 At least one side of each pile of oxidizer shall be on an aisle. [430:4.4.1]

70.2.4.3.2* The arrangement and quantity of oxidizers in storage shall depend upon their classification, type of container, type of storage (segregated, cutoff, or detached), and fire protection as specified in NFPA 430 and in the manufacturer's or processor's instructions. [430:4.4.2]

70.2.4.3.2.1 Mercantile occupancies shall comply with Chapter 9 of NFPA 430. [430:4.4.2.1]

70.2.4.3.2.2 Storage occupancies shall store and protect oxidizers in accordance with Chapter 5 through Chapter 8 of NFPA 430. [430:4.4.2.2]

70.2.4.3.3* Oxidizers shall be stored to avoid contact with incompatible materials such as ordinary combustibles, combustible or flammable liquids, greases, other oxidizers, and those materials that have the potential to react with the oxidizer or promote or initiate its decomposition. [430:4.4.3]

70.2.4.3.3.1 These incompatible materials shall not include approved packaging materials, pallets, or other dunnage. [430:4.4.3.1]

70.2.4.3.3.2 Hydrogen peroxide (Classes 2 through 4) stored in drums shall not be stored on wooden pallets. [430:4.4.3.2]

70.2.4.3.3.3 Where oxidizers are in segregated storage with flammable and combustible liquids, the oxidizer containers and flammable and combustible liquid containers shall be separated by at least 25 ft (7.6 m). [430:4.4.3.3]

70.2.4.3.3.4 The separation shall be maintained by dikes, drains, or floor slopes to prevent flammable liquid leakage from encroaching on the separation. [430:4.4.3.4]

70.2.4.3.3.5 Solid oxidizers shall not be stored directly beneath liquids. [430:4.4.3.5]

70.2.4.3.4 Where Class 2, Class 3, or Class 4 liquid oxidizers are stored, means shall be provided to prevent the liquid oxidizer from flowing out of a cutoff area into an area containing incompatible materials. [430:4.4.4]

70.2.4.3.5* Oxidizers shall be stored to prevent contact with water, which can affect either container integrity or product stability. [430:4.4.5]

70.2.4.3.6 Oxidizers shall be stored so that the storage temperature cannot be within 25°F (14°C) of their decomposition temperature or to 125°F (52°C), whichever is lower and in accordance with the manufacturer's recommendations. [430:4.4.6]

70.2.4.4 Mixed Storage. Each class shall be considered independent of the others, and a facility shall be permitted to carry up to the maximum quantity for each class of material. [430:4.5]

70.2.4.5 Training.

70.2.4.5.1 General.

70.2.4.5.1.1 Facilities storing oxidizers shall have a training program. [430:4.7.1.1]

70.2.4.5.1.2 The training shall be based on current material safety data sheets (MSDS) and other information supplied by manufacturers. [430:4.7.1.2]

70.2.4.5.2 Personnel Training Requirements.

70.2.4.5.2.1 Persons responsible for the operation and maintenance of areas in which oxidizers are stored shall be trained in the chemical and physical hazards of the stored materials and compatibility of stored materials. [430:4.7.2.1]

70.2.4.5.2.2 The training shall include coverage of other topical areas as required by 29 CFR 1910.1200, "Hazard Communication," or other applicable hazard communication regulations. [430:4.7.2.2]

70.2.4.5.3 Persons responsible for the operation and maintenance, sequence of mitigation, and protection against oxidizer incidents and/or releases in areas in which oxidizers are stored in excess of 36,000 lb (16,329 kg) for Class 1 oxidizers, 4500 lb (2041 kg) for Class 2 oxidizers, 2300 lb (1043 kg) for Class 3 oxidizers, and 10 lb (4.5 kg) for Class 4 oxidizers shall be trained to meet all requirements of 29 CFR 1910.120, "Hazardous Waste Operations and Emergency Response," and the technician level as described in NFPA 472, *Standard for Professional Competence of Responders to Hazardous Materials Incidents.* [430:4.7.3]

70.2.4.6 Heating and Electrical Installations.

70.2.4.6.1 Heating shall be arranged so that stored materials cannot be placed in direct contact with heating units, piping, or ducts. [430:4.8.1]

70.2.4.6.2 Oxidizers shall be separated from sources of heat such as heating units, piping, or ducts so that they cannot be heated to within 25°F (14°C) of their decomposition temperature or to 125°F (52°C), whichever is lower and in accordance with the manufacturer's recommendations. [430:4.8.2]

70.2.4.6.3 Electrical installations shall be in conformance with NFPA 70. [**430:**4.8.3]

70.2.4.7 Smoking.

70.2.4.7.1 Smoking shall be prohibited in all storage areas containing oxidizers. [**430:**4.9.1]

70.2.4.7.2 "No Smoking" signs shall be placed conspicuously within storage areas and at all entrances to storage areas. [**430:**4.9.2]

70.2.4.8 Fire Protection.

70.2.4.8.1* Fire Hydrants.

70.2.4.8.1.1 Fire hydrants and water supplies shall be provided as required by the AHJ. [**430:**4.11.1.1]

70.2.4.8.1.2 Hydrants shall be installed in accordance with Section 13.5. [**430:**4.11.1.2]

70.2.4.8.2 Automatic Sprinkler Protection.

70.2.4.8.2.1 Automatic sprinklers shall be provided in accordance with the requirements of Chapters 5 through 9 of NFPA 430. [**430:**4.11.2.1]

70.2.4.8.2.2 Where automatic sprinkler systems are required, the sprinkler system shall be installed in accordance with Section 13.3, and the system density shall meet the required densities contained in NFPA 430 for the class of oxidizer, the storage arrangements, and the stored quantities. [**430:**4.11.2.2]

70.2.4.8.2.2.1 Buildings with automatic sprinkler systems that do not meet the installation requirements of Section 13.3 or the required densities contained in NFPA 430 shall be considered as nonsprinklered and shall follow the storage arrangements and quantities for a nonsprinklered building. [**430:**4.11.2.2.1]

70.2.4.8.2.2.2 Buildings that require sprinkler protection having total quantities of Class 3 oxidizers greater than 200 lb (91 kg) but less than 2300 lb (1043 kg) shall comply with 7.4.1.1 of NFPA 430. [**430:**4.11.2.2.2]

70.2.4.8.3* Dry Pipe and Preaction Sprinkler Systems.

70.2.4.8.3.1 Dry-pipe and double-interlock preaction (DIPA) sprinkler systems shall not be permitted for protection of buildings or areas containing oxidizers. [**430:**4.11.3.1]

70.2.4.8.3.2 Dry-pipe and DIPA systems shall be permitted for protection of Class 1 oxidizers in Type I through Type IV building construction and Class 2 and 3 oxidizers in detached storage in Type I and Type II construction as specified in the building code. [**430:**4.11.3.2]

70.2.4.8.3.3 Dry-pipe and DIPA sprinkler systems shall be permitted in mercantile occupancies when the oxidizers are stored in open air environments, such as retail garden centers and buildings without exterior walls. For Class 3 oxidizers, the location shall be approved by the AHJ. [**430:**4.11.3.3]

70.2.4.8.4 Manual Fire Fighting. Manual fire-fighting equipment in the form of portable water extinguishers or water hose reel stations shall be provided in accordance with the requirements of Sections 13.2 and 13.6. [**430:**4.11.6]

70.2.4.8.4.1* The placement and use of dry chemical extinguishers containing ammonium compounds (Class A:B:C) shall be prohibited in areas where oxidizers that can release chlorine are stored. [**430:**4.11.6.1]

70.2.4.8.4.2* Halon extinguishers shall not be used in areas where oxidizers are stored. [**430:**4.11.6.2]

70.2.4.8.4.3* Halocarbon clean agent extinguishers shall not be used in areas where oxidizers are stored unless they have been tested to the satisfaction of the AHJ. [**430:**4.11.6.3]

70.2.4.9 Housekeeping and Waste Disposal.

70.2.4.9.1 Accumulation of combustible waste in oxidizer storage areas shall be prohibited. [**430:**4.13.1]

70.2.4.9.2* Spilled oxidizers, reacting oxidizers, and leaking or broken containers shall be removed immediately by a competent individual to a safe, secure, dry outside area or to a location designated by the competent individual to await disposal in conformance with applicable regulations and manufacturer's and processor's instructions. [**430:**4.13.2]

70.2.4.9.2.1 Spilled materials shall be placed in a clean, separate container and shall not be returned to the original container. [**430:**4.13.2.1]

70.2.4.9.2.2 The disposal of such materials shall not be combined with that of ordinary trash. [**430:**4.13.2.2]

70.2.4.9.3 Used, empty, combustible containers that previously contained oxidizers shall be stored in a detached or sprinklered area. [**430:**4.13.3]

70.2.4.9.4 Storage shall be managed to prevent excessive dust accumulation. [**430:**4.13.4]

70.2.4.9.5* Absorptive combustible packing materials used to contain water-soluble oxidizers that have become wet during either fire or nonfire conditions and wooden pallets that are exposed to water solutions of an oxidizer shall be relocated to a safe outside area and shall be disposed of properly. [**430:**4.13.5]

70.2.5 Class 1 Oxidizers.

70.2.5.1 Class 1 oxidizers, where stored in quantities in excess of 4000 lb (1814 kg), shall comply with 70.2.5.

70.2.5.2* Class 1 oxidizers, where stored in quantities of 4000 lb (1814 kg) or less, shall comply with those parts of 70.2.5 and Chapter 5 of NFPA 430 pertaining to fire prevention, sprinkler protection and compatibility, and all of Chapter 4 of NFPA 430.

70.2.5.3 Storage Arrangements.

70.2.5.3.1 The storage of Class 1 oxidizers shall be segregated, cutoff, or detached. [**430:**5.2.1]

70.2.5.3.2 Storage of Class 1 oxidizers shall be in accordance with Table 70.2.5.3.2(a) and Table 70.2.5.3.2(b). [**430:**5.2.2]

70.2.5.3.2.1 For Class 1 oxidizers stored in nonsprinklered buildings, the minimum aisle width shall be equal to the pile height. [**430:**5.2.2.1]

70.2.5.3.2.2 For Class 1 oxidizers stored in sprinklered buildings, the minimum aisle width shall be equal to the pile height, but the aisle width shall be no less than 1.2 m (4 ft) and no greater than 2.4 m (8 ft). [**430:**5.2.2.2]

70.2.5.3.2.3 There shall be no minimum distance from the pile to a wall for amounts less than 4082 kg (9000 lb). [**430:**5.2.2.3]

70.2.5.3.2.4 Class 1 oxidizers shall be permitted to be separated from ordinary combustible and incompatible materials by a solid noncombustible barrier or by a horizontal distance in accordance with Table 70.2.5.3.2(a) or Table 70.2.5.3.2(b). [**430:**5.2.2.4]

Table 70.2.5.3.2(a) Storage Limits of Class 1 Oxidizers in a Nonsprinklered Building

Storage Configurations and Allowable Distances	Segregated Storage		Cutoff Storage		Detached Storage	
	U.S. Units	Metric Units	U.S. Units	Metric Units	U.S. Units	Metric Units
Building limit	9 tons	8 met ton	36 tons	27 met ton	Unlimited	Unlimited
Pile limit	9 tons	8 met ton	20 tons	18 met ton	20 tons	18 met ton
Storage limit	8 ft	2.4 m	8 ft	2.4 m	8 ft	2.4 m
Pile width	16 ft	4.9 m	16 ft	4.9 m	16 ft	4.9 m
Maximum distance from any container to a working aisle	8 ft	2.4 m	8 ft	2.4 m	8 ft	2.4 m
Distance to next pile*						
Distance to wall	4 ft	1.2 m	4 ft	1.2 m	4 ft	1.2 m
Distance to incompatible materials and combustible commodities	12 ft	3.7 m	NP	NP	NP	NP

NP: Not permitted.
* See 70.2.5.3.2.1.
[430:Table 5.2.2(a)]

Table 70.2.5.3.2(b) Storage of Class 1 Oxidizers in a Sprinklered Building

Storage Configurations and Allowable Distances	U.S. Units	Metric Units
Building limit	Unlimited	Unlimited
Pile limit	200 tons	181 met ton
Storage height	20 ft	6.1 m
Pile width	24 ft	7.3 m
Maximum distance from any container to a working aisle	12 ft	3.7 m
Distance to next pile*		
Distance to wall†	2 ft	0.6 m
Distance to incompatible materials and combustible commodities greater than NFPA 13 Class III	8 ft	2.4 m

Note: If the storage is to be considered sprinklered, see Section 5.3 of NFPA 430.
*See 5.2.2.2 of NFPA 430.
†See 5.2.2.3 of NFPA 430.
[430:Table 5.2.2(b)]

70.2.6 Class 2 Oxidizers.

70.2.6.1 Class 2 oxidizers, where stored in quantities in excess of 1000 lb (454 kg), shall comply with 70.2.6.

70.2.6.2* Class 2 oxidizers, where stored in quantities of 1000 lb (454 kg) or less, shall comply with those parts of 70.2.6 and Chapter 6 of NFPA 430 pertaining to fire prevention, sprinkler protection and compatibility, and all of Chapter 4 of NFPA 430.

70.2.6.3 Storage Arrangements. Class 2 oxidizers shall be permitted to be separated from ordinary combustible and incompatible materials by a solid noncombustible barrier or by a horizontal distance in accordance with Table 70.2.6.3.3(a) or Table 70.2.6.3.3(b). [430:6.2]

70.2.6.3.1 The storage of Class 2 oxidizers shall be segregated, cutoff, or detached. [430:6.2.1]

70.2.6.3.2 Cutoff walls shall have a fire resistance rating of at least 1 hour. [430:6.2.2]

70.2.6.3.3 Storage of Class 2 oxidizers shall be in accordance with Table 70.2.6.3.3(a) and Table 70.2.6.3.3(b). [430:6.2.3]

70.2.6.3.3.1 For Class 2 oxidizers stored in nonsprinklered buildings, the minimum aisle width shall be equal to the pile height. [430:6.2.3.1]

70.2.6.3.3.2 For Class 2 oxidizers stored in sprinklered buildings, the minimum aisle width shall be equal to the pile height, but the aisle width shall be no less than 4 ft (1.2 m) and no greater than 8 ft (2.4 m). [430:6.2.3.2]

70.2.6.3.3.3 For cutoff or detached storage under 4500 lb (2041 kg), there shall be no minimum separation distance between the pile and any wall. [430:6.2.3.3]

70.2.6.3.4* The building limit shall be permitted to be four times the quantities shown in Table 70.2.6.3.3(b) for cutoff storage if noncombustible containers are used and buildings are of Type I or Type II construction as specified in the building code. [430:6.2.4]

Table 70.2.6.3.3(a) Storage of Class 2 Oxidizers in a Nonsprinklered Building

Storage Configurations and Allowable Distances	Segregated Storage		Cutoff Storage		Detached Storage	
	U.S. Units	Metric Units	U.S. Units	Metric Units	U.S. Units	Metric Units
Building limit	2250 lb	1022 kg	9000 lb	4086 kg	100,000 lb	45,400 kg
Pile limit					20,000 lb	9080 kg
Storage height	6 ft	1.8 m	8 ft	2.4 m	8 ft	2.4 m
Pile width	8 ft	2.4 m	12 ft	3.7 m	16 ft	4.9 m
Maximum distance from any container to a working aisle	4 ft	1.2 m	6 ft	1.8 m	8 ft	2.4 m
Distance to next pile*						
Distance to wall	4 ft	1.2 m	4 ft	1.2 m	4 ft	1.2 m
Distance to incompatible materials and combustible commodities	12 ft	3.7 m	NP	NP	NP	NP

NP: Not permitted.
*See 70.2.6.3.3.1.
[**430**:Table 6.2.3(a)]

Table 70.2.6.3.3(b) Storage of Class 2 Oxidizers in a Sprinklered Building

Storage Configurations and Allowable Distances	Segregated Storage		Cutoff Storage		Detached Storage	
	U.S. Units	Metric Units	U.S. Units	Metric Units	U.S. Units	Metric Units
Building limit	100 tons	91 met ton	1000 tons	907 met ton	Unlimited	Unlimited
Pile limit	20 tons	18.1 met ton	100 tons	91 met ton	200 tons	18.1 met ton
Storage height[a]						
Pile width	16 ft	4.9 m	25 ft	7.6 m	25 ft	7.6 m
Maximum distance from any container to a working aisle	8 ft	2.4 m	12 ft	3.7 m	12 ft	3.7 m
Distance to next pile[b]						
Distance to wall[c]	2 ft	0.6 m	2 ft	0.6 m	2 ft	0.6 m
Distance to incompatible materials and combustible commodities	12 ft	3.7 m	NP	NP	NP	NP

NP: Not permitted.
Note: If the storage is considered to be sprinklered, see Section 6.4 of NFPA 430.
[a]See 70.2.6.3.7 and Table 70.2.6.3.7.2.
[b]See 70.2.6.3.3.2.
[c]See 70.2.6.3.3.3.
[**430**:Table 6.2.3(b)]

70.2.6.3.5 Storage in glass carboys shall not be more than two carboys high. [430:6.2.5]

70.2.6.3.6 Basement Storage.

70.2.6.3.6.1 Storage in basements shall be prohibited. [430:6.2.6.1]

70.2.6.3.6.2 Where the oxidizer is stored in fixed tanks, storage in basements shall be permitted. [430:6.2.6.2]

70.2.6.3.7 Maximum Height of Storage.

70.2.6.3.7.1 Maximum storage height for nonsprinklered buildings shall be in accordance with Table 70.2.6.3.3(a). [430:6.2.7.1]

70.2.6.3.7.2 Maximum storage height for sprinklered buildings shall be in accordance with Table 70.2.6.3.7.2. [430:6.2.7.2]

70.2.6.4 Detached Storage.

70.2.6.4.1 To be considered detached, a building for storage of Class 2 oxidizers shall be separated from flammable or combustible liquid storage, flammable gas storage, combustible material in the open, any building, passenger railroad, public highway, or other tanks. [430:6.5.1]

70.2.6.4.2 The minimum separation distance shall be 35 ft (15 m) for a sprinklered building or 50 ft (23 m) for an unsprinklered building. [430:6.5.2]

70.2.7 Class 3 Oxidizers.

70.2.7.1 Class 3 oxidizers, where stored in quantities in excess of 200 lb (91 kg), shall comply with 70.2.7.

70.2.7.2* Class 3 oxidizers, where stored in quantities of 200 lb (91 kg) or less, shall comply with those parts of 70.2.7 and Chapter 7 of NFPA 430 pertaining to fire prevention, sprinkler protection and compatibility, and all of Chapter 4 of NFPA 430.

70.2.7.3 Storage Arrangements.

70.2.7.3.1 Type of Storage.

70.2.7.3.1.1 The storage of Class 3 oxidizers shall be segregated, cutoff, or detached. [430:7.2.1.1]

70.2.7.3.1.2 Storage for sodium chlorate, potassium chlorate, sodium bromate, potassium bromate, and ammonium dichromate shall only be cutoff or detached, not segregated. [430:7.2.1.2]

70.2.7.3.2 Class 3 oxidizer storage shall be located on the ground floor only. [430:7.2.2]

70.2.7.3.3 Cutoff walls shall have a fire resistance rating of at least 2 hours. [430:7.2.3]

70.2.7.3.4 Storage of Class 3 oxidizers shall be in accordance with Table 70.2.7.3.4(a) and Table 70.2.7.3.4(b). [430:7.2.4]

70.2.7.3.4.1 For Class 3 oxidizers stored in nonsprinklered buildings, the minimum aisle width shall be equal to the storage height, but the aisle width shall be no less than 4 ft (1.2 m) and no greater than 8 ft (2.4 m). [430:7.2.4.1]

70.2.7.3.4.2 For cutoff or detached storage, there shall be no minimum separation distance required between oxidizer storage of less than 2300 lb (1043 kg) and any wall. [430:7.2.4.2]

70.2.7.3.4.3 Class 3 oxidizers shall be permitted to be separated from ordinary combustible and incompatible materials by a solid noncombustible barrier or by a horizontal distance in accordance with Table 70.2.7.3.4(a) or Table 70.2.7.3.4(b). [430:7.2.4.3]

70.2.7.3.5 Storage in glass carboys shall be one carboy high. [430:7.2.5]

70.2.7.3.6 Bulk storage in open bins or piles shall not be permitted. [430:7.2.6]

70.2.7.3.7 Maximum Height of Storage.

70.2.7.3.7.1 Maximum storage height for nonsprinklered buildings shall be in accordance with Table 70.2.7.3.4(a). [430:7.2.7.1]

70.2.7.3.7.2 Maximum storage height for sprinklered buildings shall be in accordance with Table 70.2.7.3.7.2. [430:7.2.7.2]

70.2.7.4 Building Construction.

70.2.7.4.1 Buildings used for the storage of liquid Class 3 oxidizers shall not have basements. [430:7.3.1]

70.2.7.4.2 Construction materials that can come in contact with oxidizers shall be noncombustible. [430:7.3.2]

70.2.7.4.3 Storage areas for oxidizing materials shall be provided with means acceptable to the AHJ to vent products of combustion or decomposition. [430:7.3.3]

Table 70.2.6.3.7.2 Ceiling Sprinkler Protection for Class 2 Oxidizers in Palletized or Bulk and Rack Storage Areas

	Ceiling Sprinklers						
	Storage Height		Density		Area of Application		
Type of Storage	ft	m	gpm/ft^2	L/min/m^2	ft^2	m^2	In-Rack Sprinklers
Palletized or bulk	8	2.4	0.20	8	3750	348	—
Palletized or bulk	12	3.7	0.35	14	3750	348	—
Rack	12	3.7	0.20	8	3750	348	One line above each level of storage except the top level
Rack	16	4.9	0.30	12	2000	186	One line above each level of storage except the top level

[430:Table 6.4.1]

Table 70.2.7.3.4(a) Storage of Class 3 Oxidizers in a Nonsprinklered Building

	Segregated Storage		Cutoff Storage		Detached Storage	
Storage Limit	U.S. Units	Metric Units	U.S. Units	Metric Units	U.S. Units	Metric Units
Building limit	1150 lb	522 kg	4600 lb	2088 kg	40,000 lb	18,160 kg
Pile limit	1150 lb	522 kg	4600 lb	2088 kg	10,000 lb	4540 kg
Storage height	6 ft	1.8 m	6 ft	1.8 m	6 ft	1.8 m
Pile width	8 ft	2.4 m	12 ft	3.7 m	12 ft	3.7 m
Maximum distance from any container to a working aisle	4 ft	1.2 m	8 ft	2.4 m	8 ft	2.4 m
Distance to next pile*						
Distance to wall	4 ft	1.2 m	4 ft	1.2 m	4 ft	1.2 m
Distance to incompatible materials and combustible commodities	12 ft	3.7 m	NP	NP	NP	NP

NP: Not permitted.
*See 70.2.7.3.4.1.
[**430**:Table 7.2.4(a)]

Table 70.2.7.3.4(b) Storage of Class 3 Oxidizers in a Sprinklered Building

	Segregated Storage		Cutoff Storage		Detached Storage	
Storage Limit	U.S. Units	Metric Units	U.S. Units	Metric Units	U.S. Units	Metric Units
Building limit	50 tons	45 met ton	1000 tons	900 met ton	Unlimited	Unlimited
Pile limit	10 tons	8.8 met ton	30 tons	27.2 met ton	100 tons	91 met ton
Storage height[a]						
Pile width	12 ft	3.7 m	16 ft	4.9 m	20 ft	6.1 m
Maximum distance from any container to a working aisle	8 ft	2.4 m	10 ft	3 m	10 ft	3 m
Distance to next pile[b]						
Distance to wall[c]	2 ft	0.6 m	2 ft	0.6 m	2 ft	0.6 m
Distance to incompatible materials and combustible commodities	12 ft	3.7 m	NP	NP	NP	NP

NP: Not permitted.
Note: If the storage is considered to be sprinklered, see the sprinkler system design requirements of Section 7.4 of NFPA 430.
[a]See 70.2.7.3.7, Table 70.2.7.3.7.2, and Table 7.4.2.1 of NFPA 430.
[b]See 70.2.7.3.4.1.
[c]See 70.2.7.3.4.2.
[**430**:Table 7.2.4(b)]

Table 70.2.7.3.7.2 Sprinkler Protection of Class 3 Oxidizers Stored in Total Quantities of Greater Than 200 lb (91kg) But Less Than 2300 lb (1043 kg)

	Shelf	Bulk or Pile	Bulk or Pile	Rack
Maximum storage height	6 ft (1.8 m)	5 ft (1.5 m)	10 ft (3 m)	10 ft (3 m)
Maximum ceiling height	25 ft (7.6 m)	25 ft (7.6 m)	25 ft (7.6 m)	NA
Aisles — pile separation	4 ft (1.2 m) min clear aisles	4 ft (1.2 m) min clear aisles	8 ft (2.4 m) min clear aisles	8 ft (2.4 m) min clear aisles
Ceiling design criteria	0.45 gpm/2000 ft^2	0.35 gpm/5000 ft^2 or 0.6 gpm/2000 ft^2	0.65 gpm/5000 ft^2	0.35 gpm/5000 ft^2 or 0.6 gpm/2000 ft^2
In-rack sprinklers	NP	NP	NA	See 7.4.1.2 of NFPA 430
Hose stream demand	500 gpm	500 gpm	500 gpm	500 gpm
Duration	120 minutes	120 minutes	120 minutes	120 minutes

NP: Not permitted.
[430:Table 7.4.1.1]

70.2.7.4.4 Storage of Class 3 oxidizers in excess of 30 tons (27.2 met ton) shall be in buildings of Type I or Type II construction as specified in the building code. [430:7.3.4]

70.2.7.4.4.1 If Class 3 oxidizers are stored in accordance with rack storage requirements in Table 7.4.2.1 of NFPA 430, then they shall be permitted to be in buildings of construction Type I through Type IV, as specified in the building code. [430:7.3.4.1]

70.2.7.5 Detached Storage.

70.2.7.5.1 To be considered detached, a building for storage of Class 3 oxidizers shall be separated from flammable or combustible liquid storage, flammable gas storage, combustible material in the open, any building, passenger railroad, public highway, or other tanks. [430:7.5.1]

70.2.7.5.2 The minimum separation distance shall be 50 ft (15 m) for a sprinklered building or 75 ft (23 m) for an unsprinklered building. [430:7.5.2]

70.2.8 Class 4 Oxidizers.

70.2.8.1 Class 4 oxidizers, where stored in quantities in excess of 10 lb (4.5 kg), shall comply with 70.2.8.

70.2.8.2* Class 4 oxidizers, where stored in quantities of 10 lb (4.5 kg) or less, shall comply with those parts of 70.2.8 and Chapter 8 of NFPA 430 pertaining to fire prevention, sprinkler protection and compatibility, and all of Chapter 4 of NFPA 430.

70.2.8.3 Storage Arrangements.

70.2.8.3.1 The storage of Class 4 oxidizers shall be detached. [430:8.2.1]

70.2.8.3.2 Storage in glass carboys shall be one carboy high. [430:8.2.2]

70.2.8.3.3 Storage in drums or in containers or in cases shall not exceed the limits outlined in Table 70.2.8.3.3. [430:8.2.3]

70.2.8.3.4 Bulk storage in piles or fixed bins shall not be permitted. [430:8.2.4]

Table 70.2.8.3.3 Storage of Class 4 Oxidizers in Drums, Containers, and Cases

Storage Configurations and Quantities	Nonsprinklered Building		Sprinklered Building	
	U.S. Units	Metric Units	U.S. Units	Metric Units
Piles				
Length	10 ft	3.0 m	10 ft	3.0 m
Width	4 ft	1.2 m	4 ft	1.2 m
Height	4 ft	1.2 m	8 ft	2.4 m
Distance to next pile	6 ft	1.8 m	8 ft	2.4 m
Quantity limit per building	1 ton	0.9 met ton	Unlimited	Unlimited

[430:Table 8.2.3]

70.2.8.4 Building Construction and Location.

70.2.8.4.1 A storage building or storage tank shall be located not less than the minimum distance provided in Table 70.2.8.4.1 from flammable liquid storage, combustible material in the open, any inhabited building, passenger railroad, public highway, property line, or tank other than oxidizer storage. [430:8.3.4]

70.2.8.4.2* Where tanks are not separated from each other by 10 percent of the distance specified in Table 70.2.8.4.1 for the largest tank, the total contents of all tanks shall be used when using Table 70.2.8.4.1. [430:8.3.5]

70.2.9 Storage and Display of Oxidizing Materials in Mercantile Occupancies and Storage Occupancies.

70.2.9.1 Application. Subsection 70.2.9 applies to the display and storage of Class 1 through Class 3 oxidizers in mercantile occupancies and storage occupancies where the general public has access to the materials for sale and to the storage of

Table 70.2.8.4.1 Separation of Buildings from Tanks Containing Class 4 Oxidizers

Weight of Class 4 Oxidizer		Distance	
lb	kg	ft	m
10–100	4.5–45.4	75	23
100–500	45.4–227	100	30
501–1,000	227–454	125	38
1,001–3,000	454–1,361	200	61
3,001–5,000	1,361–2,268	300	91
5,001–10,000	2,268–4,536	400	122
over 10,000	over 4,536	Subject to approval by the AHJ	

[**430**:Table 8.3.4]

additional oxidizing materials in such occupancies in areas that are not accessible to the public. [**430**:9.1]

70.2.9.2 General Requirements. Oxidizing materials that are displayed or stored in areas accessible to the general public shall meet the requirements of 70.2.9.2.1 through 70.2.9.2.5. [**430**:9.2]

70.2.9.2.1* Oxidizing materials shall be separated from ordinary combustible and incompatible materials by a solid noncombustible barrier or by a horizontal distance of not less than 4 ft (1.2 m). [**430**:9.2.1]

70.2.9.2.1.1 Ordinary combustibles shall not include approved packaging materials, pallets, or other dunnage used for the oxidizers. [**430**:9.2.1.1]

70.2.9.2.1.2 Separation from ordinary combustible materials shall not be required for Class 1 oxidizers. [**430**:9.2.1.2]

70.2.9.2.2 Solid oxidizing materials shall not be displayed directly beneath liquids. [**430**:9.2.2]

70.2.9.2.3 For sprinklered mercantile occupancies and storage occupancies, storage heights and sprinkler protection criteria shall be in accordance with Chapter 5 through Chapter 8 of NFPA 430. [**430**:9.2.3]

70.2.9.2.4 Storage and display of solids shall not exceed 200 lb/ft^2 (976.4 kg/m^2) of floor area actually occupied by solid merchandise. [**430**:9.2.4]

70.2.9.2.5 Storage and display of liquids shall not exceed 20 gal/ft^2 (76 L/m^2) of floor area actually occupied by liquid merchandise. [**430**:9.2.5]

70.2.9.2.6 Racks and shelves used for storage or display shall be of substantial construction and adequately braced and anchored. [**430**:9.2.6]

70.2.9.2.7 Containers shall be approved for their intended use. [**430**:9.2.7]

70.2.9.2.8 Individual containers shall not exceed 100 lb (45.4 kg) capacity for solids or a 5 gal (19 L) capacity for liquids. [**430**:9.2.8]

70.2.9.2.9 Except for 4 mm surface coating, floors shall be of noncombustible construction. [**430**:9.2.9]

70.2.9.2.10 Aisles 4 ft (1.2 m) in width shall be maintained on three sides of the storage or display area. [**430**:9.2.10]

70.2.9.2.11 Hazard identification signs shall be provided in accordance with this *Code*. [**430**:9.2.11]

70.2.9.2.12 Storage Arrangements in Nonsprinklered Mercantile Occupancies and Storage Occupancies.

70.2.9.2.12.1 Storage and display of Class 2 and Class 3 oxidizing materials shall extend no higher than 6 ft (1.8 m) from the floor to the top of the uppermost container. [**430**:9.2.12.1]

70.2.9.2.12.2 The storage and display of Class 2 and Class 3 oxidizers shall not exceed 4 ft (1.2 m) in depth. [**430**:9.2.12.2]

70.2.9.2.13 Containers.

70.2.9.2.13.1 Individual containers less than 5 gal (19 L) or less than 25 lb (11 kg) shall be stored or displayed on pallets, racks, or shelves. [**430**:9.2.13.1]

70.2.9.3 Quantity Limitations.

70.2.9.3.1 The quantity of oxidizing materials permitted in a mercantile occupancy or storage occupancy shall not exceed the quantities given in Table 70.2.9.3.1 for either nonsprinklered or sprinklered areas, whichever is applicable. [**430**:9.3.1]

Table 70.2.9.3.1 Maximum Quantity of Oxidizers Allowed in Mercantile and Storage Occupancies

Class of Material	Weight Nonsprinklered		Weight Sprinklered	
	lb	kg	lb	kg
3	1,150	522	2,300	1,044
2	2,250	1,021	4,500	2,042
1	18,000	8,165	Unlimited	Unlimited

[**430**:Table 9.3.1]

70.2.9.3.1.1 Facilities that require sprinkler protection having total quantities of Class 3 oxidizers greater than 200 lb (91 kg) but less than 2300 lb (1043 kg) shall comply with 7.4.1.1 of NFPA 430. [**430**:9.3.1.1]

70.2.9.3.1.2 Additional quantities shall be permitted if located in control areas. [**430**:9.3.1.2]

70.2.9.3.1.2.1 Control areas shall be constructed in accordance with the building code. [**430**:9.3.1.2.1]

70.2.9.3.1.2.2 The number of control areas allowed shall be in accordance with the building code. [**430**:9.3.1.2.2]

70.2.9.3.2 Quantities in excess of those in Table 70.2.9.3.1 shall comply with 7.4.2 of NFPA 430. [**430**:9.3.2]

70.3 Organic Peroxide Formulations.

70.3.1 Application.

70.3.1.1* The storage, use, and handling of liquid and solid organic peroxide formulations shall comply with Section 70.3; NFPA 432, *Code for the Storage of Organic Peroxide Formulations*; and Section 60.1 and Section 60.2 of this *Code*.

70.3.1.2 Where the provisions of Section 70.3 or NFPA 432 conflict with the provisions of Chapter 60, the provisions of Section 70.3 and NFPA 432 shall apply.

70.3.1.3 Section 70.3 shall apply only to commercially available organic peroxide formulations in U.S. Department of Transportation- or Canadian Ministry of Transport–approved packages. [432:1.1.1]

70.3.1.4 Section 70.3 shall not apply to the storage of such formulations in process areas where they are manufactured or used. [432:1.1.2]

70.3.1.5 Section 70.3 does not apply to organic peroxide formulations that are capable of detonation in their normal shipping containers under conditions of fire exposure. Such formulations shall be handled and stored as Explosives 1.1 (formerly known as Class A explosives) in accordance with NFPA 495. [432:1.1.3]

70.3.2* Classification of Organic Peroxide Formulations. For the purpose of 70.3.2, organic peroxide formulations shall be classified according to the system described in 70.3.2.1 through 70.3.2.5. [432:4.12]

70.3.2.1 Class I shall describe those formulations that are capable of deflagration but not detonation. [432:4.12.1]

70.3.2.2 Class II shall describe those formulations that burn very rapidly and that present a severe reactivity hazard. [432:4.12.2]

70.3.2.3 Class III shall describe those formulations that burn rapidly and that present a moderate reactivity hazard. [432:4.12.3]

70.3.2.4 Class IV shall describe those formulations that burn in the same manner as ordinary combustibles and that present a minimal reactivity hazard. [432:4.12.4]

70.3.2.5 Class V shall describe those formulations that burn with less intensity than ordinary combustibles or do not sustain combustion and that present no reactivity hazard. [432:4.12.5]

70.3.3 Classification of Storage Facilities.

70.3.3.1 Segregated storage shall refer to storage in the same room or inside area, but physically separated by distance from incompatible materials. Sills, curbs, intervening storage of nonhazardous compatible materials, and aisles shall be permitted to be used as aids in maintaining spacing. *(See Chapter 5 of NFPA 432.)* [432:4.13.1]

70.3.3.2 Cut-off storage shall refer to storage in the same building or inside area, but physically separated from incompatible materials by partitions or walls. *(See Chapter 6 of NFPA 432.)* [432:4.13.2]

70.3.3.3 Detached storage shall refer to storage in either an open outside area or a separate building containing no incompatible materials and located away from all other structures. *(See Chapter 7 of NFPA 432.)* [432:4.13.3]

70.3.4 Basic Requirements.

70.3.4.1 Identification. All storage areas containing organic peroxide formulations shall be conspicuously identified by the words "Organic Peroxides" and by the class, as defined in 70.3.2. [432:4.1]

70.3.4.1.1* When organic peroxide formulations having different classifications as defined by 70.3.2 are stored in the same area, the area shall be marked for the most severe class present. *[432:4.1.1]*

70.3.4.1.2 Packages containing organic peroxide formulations shall be individually marked with the chemical name of the organic peroxide or with other pertinent information to allow proper area classification as required by 70.3.4.1 through 70.3.4.1.3. [432:4.1.2]

70.3.4.1.3 Packages containing organic peroxide formulations that require temperature control shall be marked with the recommended storage temperature range. [432:4.1.3]

70.3.4.2 Employee Instruction. Personnel involved in operations in organic peroxide storage areas shall be instructed in proper and safe handling of such materials, proper use of personal protective equipment, fire suppression equipment, proper and safe disposal of spilled material, and proper emergency procedures. Records shall be maintained of such training. Manufacturers' instructions shall be consulted for each specific formulation. [432:4.2]

70.3.4.3 Building Construction. Any construction materials that can be contacted by organic peroxide formulations shall be compatible with the materials stored. [432:4.3]

70.3.4.4 Heating and Cooling.

70.3.4.4.1 Storage areas shall be maintained within the recommended storage temperature range for the materials stored. *(See Annex B for compounds needing refrigeration systems.)* [432:4.4.1]

70.3.4.4.2* Where the required storage temperature range extends beyond normal ambient temperatures, high or low temperature limit switches, as applicable, shall be provided in addition to the normal temperature controls. These limit switches shall actuate an alarm arranged to ensure prompt response. [432:4.4.2]

70.3.4.4.3 Heating systems shall use hot water, low pressure [less than 15 psig (103 kPa gauge)] steam, or indirectly heated warm air. Cooling systems shall not utilize direct expansion of a flammable gas. [432:4.4.3]

70.3.4.4.4 Heating coils, radiators, air diffusers, cooling coils, piping, and ducts shall be installed so as to prevent direct contact with containers and to prevent overheating or overcooling of the materials stored. [432:4.4.4]

70.3.4.5 Smoking. Smoking shall be prohibited in all organic peroxide storage areas. "No Smoking" signs shall be placed conspicuously at all entrances to and within storage areas. [432:4.6]

70.3.4.6 Fire Protection.

70.3.4.6.1* Manual fire-fighting equipment shall be provided according to manufacturers' recommendations and maintained according to the requirements of Sections 13.2 and 13.6. [432:4.8.1]

70.3.4.6.2* Where required by other provisions of Section 70.3, automatic sprinklers and water spray systems shall be designed and installed according to the requirements of Sections 13.3 and 13.8 and shall provide the following discharge densities:

(1) Class I — 0.50 gpm/ft^2 (20.4 L/min/m^2)
(2) Class II — 0.40 gpm/ft^2 (16.3 L/min/m^2)
(3) Class III — 0.30 gpm/ft^2 (12.2 L/min/m^2)
(4) Class IV — 0.25 gpm/ft^2 (10.2 L/min/m^2) [432:4.8.2]

70.3.4.6.2.1 The system shall be designed to provide the required density over a 3000 ft^2 (280 m^2) area for areas protected

Table 70.3.4.8.1(a) Maximum Allowable Quantity of Organic Peroxide Formulations in Nonsprinklered Buildings

Class of Organic Peroxide Formulation	Segregated Storage		Cut-Off Storage		Detached Storage Minimum Separation*					
					50 ft (15 m)		100 ft (30.5 m)		150 ft (46 m)	
	lb	kg	lb	kg	lb	kg	lb	kg	lb	kg
I	N/A	N/A	N/A	N/A	1000	454	4,000	1,810	10,000	4,540
II	N/A	N/A	2,000	907	20,000	9,070	80,000	36,300	500,000	227,000
III	1,500	680	3,000	1,360	70,000	31,800	200,000	90,700	750,000	340,000
IV	100,000	45,400	200,000	90,700	300,000	136,000	500,000	227,000	1,000,000	454,000
V	UNL	UNL	UNL	UNL	UNL	UNL	UNL	UNL	UNL	UNL

Note: N/A — Not Allowed; UNL — Unlimited.
*Minimum separation means the distance from the line of property that is or can be built upon, including the opposite side of a public way, or the distance from the nearest important building on the same property.
[**432**:Table 4.10(a)]

Table 70.3.4.8.1(b) Maximum Allowable Quantity of Organic Peroxide Formulations in Sprinklered Buildings

Class of Organic Peroxide Formulation	Segregated Storage		Cut-off Storage		Detached Storage Minimum Separation*					
					50 ft (15 m)		100 ft (30.5 m)		150 ft (46 m)	
	lb	kg	lb	kg	lb	kg	lb	kg	lb	kg
I	N/A	N/A	2000	907	2000	907	20,000	9070	175,000	79,400
II	4000	1810	50,000	22,700	100,000	45,400	200,000	90,700	UNL	UNL
III	50,000	22,700	100,000	45,400	200,000	90,700	UNL	UNL	UNL	UNL
IV	UNL	UNL	UNL	UNL	UNL	UNL	UNL	UNL	UNL	UNL
V	UNL	UNL	UNL	UNL	UNL	UNL	UNL	UNL	UNL	UNL

Note: N/A — Not Allowed; UNL — Unlimited.
*Minimum separation means the distance from the line of property that is or can be built upon, including the opposite side of a public way, or the distance from the nearest important building on the same property.
[**430**:Table 4.10(b)]

by a wet pipe sprinkler system or 3900 ft^2 (360 m^2) for areas protected by a dry pipe sprinkler system. The entire area of any building of less than 3000 ft^2 (280 m^2) shall be used as the area of application. [**432**:4.8.2.1]

70.3.4.6.3 Where required, water supplies for automatic sprinklers, fire hydrants, and so forth, shall be provided in accordance with Section 13.5 and shall be capable of supplying the anticipated demand for at least 90 minutes. [**432**:4.8.3]

70.3.4.7 Housekeeping and Waste Disposal.

70.3.4.7.1 Any accumulation of combustible waste in organic peroxide storage areas shall be prohibited. [**432**:4.9.1]

70.3.4.7.2* Spilled material and leaking or damaged containers and packages shall immediately be removed to a safe location for disposal. [**432**:4.9.2]

70.3.4.7.3 Specific disposal procedures shall be established for all organic peroxide storage areas. Disposal procedures shall conform to all applicable federal, state, and local regulations and with the manufacturers' recommendations. [**432**:4.9.3]

70.3.4.8 Storage Limitations.

70.3.4.8.1 Storage of organic peroxide formulations shall be limited to those areas within the scope of 70.3.4.8. The maximum allowable quantities of organic peroxide formulations that can be stored in a single area or building shall depend on the classification of the formulations and the classification of the storage facility, as set forth in Table 70.3.4.8.1(a) and Table 70.3.4.8.1(b). [**432**:4.10.1]

70.3.4.8.1.1 The quantity of Class III organic peroxide formulations as it appears in Table 70.3.4.8.1(a) in cut-off storage shall be permitted to be increased to 20,000 lb (9070 kg) if the walls or partitions providing the cut-off have a fire resistance rating of at least 4 hours. [**432**:4.10.1.1]

70.3.4.8.1.2 Class I organic peroxide formulation cut-off storage as it appears in Table 70.3.4.8.1(b) shall have interior walls with a blast resistance of 432 psf (0.2 bar). [**432**:4.10.1.2]

70.3.4.8.1.3* Class I organic peroxide formulation cut-off storage as it appears in Table 70.3.4.8.1(b) shall have deflagration venting provided for exterior walls. [**432**:4.10.1.3]

70.3.4.8.2* Where two or more different classes of organic peroxide formulations are stored in the same area, the maximum quantity permitted shall be limited to the sum of the proportional amounts that each class bears to the maximum permitted for that class. The total of the proportional amounts shall not exceed 100 percent. [**432**:4.10.2]

70.3.4.8.3 Where the storage area is protected by a specially engineered fire protection system acceptable to the AHJ, the

Table 70.3.4.9.5 Provisions for Storage Arrangement by Class of Organic Peroxide Formulation

Class of Organic Peroxide Formulation	Maximum Pile Height		Maximum Pile Width		Minimum Main Aisle Width		Minimum Additional Aisle Width	
	ft	m	ft	m	ft	m	ft	m
I	6	1.8	4	1.2	8	2.4	4	1.2
II*	8	2.4	8	2.4	6	1.8	4	1.2
III*	8	2.4	8	2.4	6	1.8	4	1.2
IV	10	3	16	4.9	4	1.2	3	0.9
V				*See 70.3.4.9.7*				

*See 70.3.4.9.6.
[**430**:Table 4.11.5]

quantity of organic peroxide formulations shall be permitted to be increased. [**432**:4.10.3]

70.3.4.8.4 Organic peroxide formulations shall not be stored where they can be exposed to explosive materials. [**432**:4.10.4]

70.3.4.9 Storage Arrangements.

70.3.4.9.1 Storage shall be arranged to facilitate manual access and handling, to maintain pile stability, to minimize breakage and spillage, and to promote good housekeeping. [**432**:4.11.1]

70.3.4.9.2 A clear space of at least 2 ft (0.6 m) shall be maintained between organic peroxide storage and uninsulated metal walls. [**432**:4.11.2]

70.3.4.9.3 Separation Distance.

70.3.4.9.3.1 Incompatible materials and flammable liquids shall not be stored within 25 ft (7.6 m) of organic peroxide formulations. The effective separation distance shall be maintained by floor slope, drains, or dikes to prevent liquid leakage from encroaching on the organic peroxide formulation storage area.

Exception: Organic peroxide formulations that can also be classified as flammable liquids by their flash point shall be permitted to be stored with other organic peroxide formulations, and the more restrictive requirements of NFPA 30, Chapter 66, or 70.3.4.9.3 shall apply. [432:4.11.3.1]

70.3.4.9.3.2 As an alternative to the 25 ft (7.6 m) separation distance, a 1-hour, liquidtight fire barrier shall be permitted. [**432**:4.11.3.2]

70.3.4.9.4 Only closed containers and packages shall be permitted in storage areas. [**432**:4.11.4]

70.3.4.9.5 Storage of bags, drums, and other containers and packages of organic peroxide formulations shall be in accordance with Table 70.3.4.9.5. [**432**:4.11.5]

70.3.4.9.6* Storage of 55 gal (208 L) drums of Class II and Class III organic peroxide formulations shall be stored one high only. [**432**:4.11.6]

70.3.4.9.7 Storage of Class V organic peroxide formulations shall meet the requirements of this *Code*. [**432**:4.11.7]

70.3.5 Segregated Storage.

70.3.5.1 Scope. The requirements of 70.3.5 through 70.3.5.5 and Chapter 5 of NFPA 432 shall apply to the storage of organic peroxide formulations when stored under segregated conditions as defined in 70.3.3.1 and in quantities not exceeding those shown in Table 70.3.4.8.1(a) and Table 70.3.4.8.1(b). [**432**:5.1]

70.3.5.2 Basic Requirements. The basic requirements set forth in Chapter 4 of NFPA 432 shall apply to the segregated storage of organic peroxide formulations. [**432**:5.2]

70.3.5.3 Building Construction. If there are any floors or open spaces located below the organic peroxide storage area, the floor of the storage area shall be made watertight and shall be provided with drainage that leads to a safe location. Every means shall be taken to ensure that spilled material cannot run down into areas below the organic peroxide storage area. [**432**:5.3]

70.3.5.4 Storage Arrangement.

70.3.5.4.1 A minimum of 8 ft (2.4 m) of clear space shall be maintained between organic peroxide storage and any other storage. [**432**:5.4.1]

70.3.5.4.2 Segregated storage areas shall meet all applicable requirements of this *Code*. [**432**:5.4.2]

70.3.5.4.3* A clear space of at least 4 ft (1.2 m) shall be maintained between organic peroxide storage and any walls of combustible or limited-combustible construction. [**432**:5.4.3]

70.3.5.5 Fire Protection. Automatic sprinkler protection shall be provided for segregated storage areas in accordance with 70.3.4.6.2 and 70.3.4.6.3, under the following conditions:

(1) Storage areas of combustible construction containing Classes II, III, or IV organic peroxide formulations
(2) Storage areas of noncombustible construction where quantities exceed the following:
   (a) 100,000 lb (45,400 kg) of Class IV organic peroxide formulations
   (b) 1500 lb (680 kg) of Class III organic peroxide formulations
   (c) Any quantity of Class II organic peroxide formulation [**432**:5.5]

70.3.6 Cut-Off Storage.

70.3.6.1 Scope. The requirements of 70.3.6 through 70.3.6.3.3 and Chapter 6 of NFPA 432 shall apply to the storage of organic peroxide formulations when stored under cut-off conditions as defined in 70.3.3.2 and in quantities not exceeding those shown in Table 70.3.4.8.1(a) and Table 70.3.4.8.1(b). [**432**:6.1]

70.3.6.2* Storage Arrangement. A clear space of at least 4 ft (1.2 m) shall be maintained between organic peroxide storage and any walls of combustible or limited-combustible construction. [**432**:6.4]

70.3.6.3 Sprinkler Protection.

70.3.6.3.1 Automatic sprinkler protection in accordance with 70.3.4.6.2 and 70.3.4.6.3 shall be provided for all storage areas of combustible construction, regardless of the class of formulation stored. [**432**:6.5.1]

70.3.6.3.2 Automatic sprinkler protection shall be provided for all storage areas of noncombustible construction where any quantity of Class I organic peroxide formulations are stored. [**432**:6.5.2]

70.3.6.3.3 Automatic sprinkler protection shall be provided for all storage areas of noncombustible construction where quantities exceed the following:

(1) 2000 lb (907 kg) of Class II organic peroxide formulations
(2) 3000 lb (1360 kg) of Class III organic peroxide formulations
(3) 200,000 lb (90,700 kg) of Class IV organic peroxide formulations [**432**:6.5.3]

70.3.7 Detached Storage.

70.3.7.1 Scope. The requirements of 70.3.7 through 70.3.7.2.3 and Chapter 7 of NFPA 432 shall apply to the storage of organic peroxide formulations when stored under detached conditions as defined in 70.3.3.3 and in quantities and at separation distances as specified in Table 70.3.4.8.1(a) and Table 70.3.4.8.1(b). [**432**:7.1]

70.3.7.2 Building Location.

70.3.7.2.1* Detached storage buildings shall be separated from the lines of property that are or can be built upon, including the opposite side of a public way, or from the nearest important building on the same property. [**432**:7.3.1]

70.3.7.2.2 For Classes II, III, and IV organic peroxide formulations, detached storage buildings separated by less than 50 ft (15.3 m) shall be considered to be a single area when applying the limits for Table 70.3.4.8.1(a)and Table 70.3.4.8.1(b). [**432**:7.3.2]

70.3.7.2.3 For Class I organic peroxide formulations, detached storage buildings shall be separated from each other in accordance with Table 70.3.7.2.3. [**432**:7.3.3]

Table 70.3.7.2.3 Separation of Individual Storage Buildings

Nonsprinklered				Automatic Sprinklered			
Quantity		Distance		Quantity		Distance	
lb	kg	ft	m	lb	kg	ft	m
1,000	454	20	6	2,000	907	20	6
4,000	1,810	75	23	20,000	9,070	75	23
10,000	4,540	100	30	175,000	79,400	100	30

[**432**:Table 7.3.3]

Chapter 71 Pyrophoric Solids and Liquids

71.1 General. The storage, use, and handling of pyrophoric solids and liquids shall comply with the requirements of Chapter 60. The storage, use, and handling of pyrophoric solids and liquids in amounts exceeding the maximum allowable quantity permitted in control areas as set forth in Chapter 60 shall also comply with the requirements of Chapter 71.

71.2 Outdoor Storage.

71.2.1 Location. The separation of pyrophoric solids and liquids from buildings, property lines, streets, alleys, public ways, or means of egress to a public way shall be twice the separation required by Chapter 66 for an equivalent volume of Class I-B flammable liquid.

71.2.2 Storage Arrangement. The quantities, arrangement, and spacing for pyrophoric liquids and solids in tanks, portable tanks, and containers shall be in accordance with Chapter 66 as required for Class I-B flammable liquids.

Chapter 72 Unstable (Reactive) Solids and Liquids

72.1 General. The storage, use, and handling of unstable (reactive) solids and liquids shall comply with the requirements of Chapter 60. The storage, use, and handling of unstable (reactive) solids and liquids in amounts exceeding the maximum allowable quantity permitted in control areas as set forth in Chapter 60 shall also comply with the requirements of Chapter 72.

72.2 Outdoor Storage.

72.2.1 Location.

72.2.1.1 Deflagrating Material. The outdoor storage area for unstable (reactive) solids and liquids that can deflagrate shall not be within 75 ft (23 m) of buildings, property lines, streets, alleys, public ways, or means of egress to a public way.

72.2.1.2 Nondeflagrating Material. The outdoor storage area for nondeflagrating unstable (reactive) solids and liquids shall not be within 20 ft (6.1 m) of buildings, property lines, streets, alleys, public ways, or means of egress to a public way, except as provided in 72.2.1.3.

72.2.1.3 Distance Reduction. An unpierced 2-hour fire-resistive wall extending not less than 30 in. (76 cm) above and to the side of the storage area shall be permitted in lieu of the distance specified in 72.2.1.2 for nondeflagrating materials.

72.2.2 Storage Arrangement.

72.2.2.1 Pile Size Limit. Unstable (reactive) solids and liquids stored outdoors shall be separated into piles, each not larger than 1000 ft^3 (28.3 m^3).

72.2.2.2 Aisles. Aisle widths between piles shall not be less than one-half the height of the pile or 10 ft (3 m), whichever is greater.

Chapter 73 Water-Reactive Solids and Liquids

73.1 General. The storage, use, and handling of water-reactive solids and liquids shall comply with the requirements of Chapter 60. The storage, use, and handling of water-reactive solids and liquids in amounts exceeding the maximum allowable quantity permitted in control areas as set forth in Chapter 60 shall also comply with the requirements of Chapter 73.

73.2 Outdoor Storage.

73.2.1 Location.

73.2.1.1 Class 3 Materials. The outdoor storage area for Class 3 water-reactive solids and liquids shall not be within 75 ft (23 m) of buildings, property lines, streets, alleys, public ways, or means of egress to a public way.

73.2.1.2 Class 1 and 2 Materials. The outdoor storage area for Class 1 and Class 2 water-reactive solids and liquids shall not be within 20 ft (6.1 m) of buildings, property lines, streets, alleys, public ways, or means of egress to a public way, except as provided in 73.2.1.3.

73.2.1.3 Distance Reduction. An unpierced 2-hour fire-resistive wall extending not less than 30 in. (76 cm) above and to the side of the storage area shall be permitted in lieu of the distance specified in 73.2.1.2.

73.2.2 Storage Arrangement.

73.2.2.1 Pile Size Limits. Pile sizes for water-reactive solids and liquids shall be limited as follows:

(1) Class 3 water-reactive solids and liquids shall be limited to piles not greater than 100 ft^3 (2.83 m^3).
(2) Class 1 or Class 2 water-reactive solids and liquids shall be limited to piles not greater than 1000 ft^3 (28.3 m^3).

73.2.2.2 Aisles. Aisle widths between piles shall not be less than one-half the height of the pile or 10 ft (3 m), whichever is greater.

Annex A Explanatory Material

Annex A is not a part of the requirements of this NFPA document but is included for informational purposes only. This annex contains explanatory material, numbered to correspond with the applicable text paragraphs.

A.1.1.1(7) *Access* refers to fire department access to the exterior of the building and to areas within the interior of the building.

A.1.2 Consideration for life safety could include occupants, fire department personnel, fire brigade members, employees, responsible parties, and the general public.

A.1.3.2 This *Code* is partially composed of limited text references extracted from other NFPA codes and standards in an effort to bring together information useful during field inspections.

With respect to hazardous materials, provisions in Chapters 61, 63, 65, 66, 69, and 70 are partial extracts of materials from NFPA standards referenced in each of these chapters. These extracts are included in NFPA 1 UFC to assist users of the document by providing ready access to provisions that could be routinely referenced by fire code enforcers. However, through their adoption by reference in NFPA 1 UFC, the NFPA standards identified in these chapters apply in their entirety.

A.1.3.6.2 A limited but reasonable time should be allowed for compliance with any part of this *Code* for existing buildings, commensurate with the magnitude of expenditure, disruption of services, and degree of hazard. Occupied existing buildings should comply with 10.3.3.

A.1.7.2 For additional information on qualifications of code enforcement personnel, see Annex N, AHJ Minimum Qualifications and Job Descriptions for Code Enforcement Personnel.

A.1.7.15.2 Before each performance or the start of such activity, such individuals should inspect the required fire appliances provided to see that they are properly located and in good working order, and should keep diligent watch for fires during the time such place is open to the public or such activity is being conducted and take prompt measures for extinguishment of fires that can occur.

A.1.10.9.3 No additional information should be submitted to review by the Board of Appeals without the information submitted to the AHJ for their review prior to the hearing date. Additional information submitted after the filing of the appeal to the Board and AHJ should be made available to the Board and AHJ in a timeframe that permits adequate review before the hearing date.

A.1.12.17 Figure A.1.12.17 shows a sample permit.

A.1.14.1 When requested by the AHJ, a code footprint, as required by Section 1.14 of the *Code*, establishes a graphic submittal format for every newly constructed building, new building addition, changes in occupancy, or significant building renovation that should be submitted as a code footprint. The code footprint records and maps exiting features and provides key performance information for fire and life safety features throughout the life span of a building. A code footprint should be submitted in the early plan development stages of a construction project to the AHJ for acceptance.

The following are code footprint minimum requirements that should be shown:

(1) The schematic floor
(2) Graphic bar scale
(3) North indicator
(4) Complete building floor plan with clear identification of new, remodeled, and existing portions
(5) All permanent partitions taller than 6 ft (1.8 m)
(6) Each room and space labeled with plain text, keynotes, or legends
(7) Occupant load of assembly rooms and total for each floor level
(8) Stair and shaft enclosures and ratings with identification of openings and ratings
(9) Rated corridors and openings with identification of openings and ratings
(10) Occupancy and area separations
(11) Horizontal exit arrangements, exit passageways, and smoke compartments
(12) Designated required exterior exits and capacity
(13) Fire department connections (hydrants, exterior standpipe, or sprinkler system) and access roads to building
(14) Access to property and buildings
(15) Power and fuel shutoff locations
(16) Small-scale site plan when available
(17) Distances to exposures and property lines
(18) Grade elevation at each corner
(19) Any special hazards or conditions
(20) Location of any planned additions

The following information should be in the narrative:

(1) Project construction purpose: New, addition, change in use, renovation, or other
(2) Reason for submittal: Building permit and certificate of occupancy, new licensure, or Plan of Correction for existing code deficiencies
(3) Codes of record and other requirements or regulations
(4) Building location or address

Side 1

PERMIT
FOR CUTTING AND WELDING
WITH PORTABLE GAS OR ARC EQUIPMENT

Date _____

Building _____

Dept. _____ Floor _____

Work to be done _____

_____

Special precautions _____

_____

Is fire watch required? _____

The location where this work is to done has been examined, necessary precautions taken, and permission is granted for this work. (See other side.)

Permit expires _____

Signed _____
(Individual responsible for authorizing welding and cutting)

Time Started _____ Completed _____

FINAL CHECK

Work area and all adjacent areas to which sparks and heat might have spread [including floors above and below and on opposite side of wall(s)] were inspected 30 minutes after the work was completed and were found firesafe.

Signed _____
(Supervisor or Fire Watcher)

Side 2

ATTENTION

Before approving any cutting and welding permit, the fire safety supervisor or appointee shall inspect the work area and confirm that precautions have been taken to prevent fire in accordance with NFPA 51B.

PRECAUTIONS

- ❑ Sprinklers in service
- ❑ Cutting and welding equipment in good repair

WITHIN 35 FT (10.7 M) OF WORK

- ❑ Floors swept clean of combustibles
- ❑ Combustible floors wet down and covered with damp sand, metal, or other shields
- ❑ All wall and floor openings covered
- ❑ Covers suspended beneath work to collect sparks

WORK ON WALLS OR CEILINGS

- ❑ Construction noncombustible and without combustible covering
- ❑ Combustibles moved away from opposite side of wall

WORK ON ENCLOSED EQUIPMENT
(Tanks, containers, ducts, dust collectors, etc.)

- ❑ Equipment cleaned of all combustibles
- ❑ Containers purged of flammable vapors

FIRE WATCH

- ❑ To be provided during and 30 minutes after operation
- ❑ Supplied with extinguisher and small hose
- ❑ Trained in use of equipment and in sounding fire alarm

FINAL CHECK

- ❑ To be made 30 minutes after completion of any operation unless fire watch is provided

Signed _____
(Supervisor)

FIGURE A.1.12.17 Sample Permit.

(5) Owner and facility name
(6) Date developed and revision dates
(7) Designer's information (name, address, and phone number)
(8) Designer's seal (RA or PE)
(9) Name of responding fire services
(10) Name of local building code jurisdiction
(11) Occupancy type(s)
(12) Type of construction
(13) Total floor area of each occupancy actual versus allowable
(14) Structural code requirements such as the following:
  (a) Height:
    i. Structural fire ratings actual versus allowable
    ii. Identification of active fire protection features such as: type of automatic suppression systems and locations; fire alarm signaling systems; emergency lighting and power features; smoke control system
  (b) Decision matrix
  (c) Hazardous materials identified by the fire code hazard class:
    i. In storage: inside; outside
    ii. In-use open systems: inside; outside
    iii. In-use closed systems: inside; outside
  (d) Water supply requirements of the facility for fire suppression
  (e) Alternative design and/or methods of construction
  (f) Modifications of codes and board of appeals case number

A.1.15 A third-party reviewer is a person or group of persons chosen by the AHJ to review a proposed design, operation, process, or new technology when the complexity of the design exceeds the capabilities of the AHJ to determine whether the proposed design, operation, process, or new technology has met the *Code* requirements.

A.3.2.1 Approved. The National Fire Protection Association does not approve, inspect, or certify any installations, procedures, equipment, or materials; nor does it approve or evaluate testing laboratories. In determining the acceptability of installations, procedures, equipment, or materials, the AHJ may base acceptance on compliance with NFPA or other appropriate standards. In the absence of such standards, said authority may require evidence of proper installation, procedure, or use. The AHJ may also refer to the listings or labeling practices of an organization that is concerned with product evaluations and is thus in a position to determine compliance with appropriate standards for the current production of listed items.

A.3.2.2 Authority Having Jurisdiction (AHJ). The phrase "authority having jurisdiction," or its acronym AHJ, is used in NFPA documents in a broad manner, since jurisdictions and approval agencies vary, as do their responsibilities. Where public safety is primary, the AHJ may be a federal, state, local, or

other regional department or individual such as a fire chief; fire marshal; chief of a fire prevention bureau, labor department, or health department; building official; electrical inspector; or others having statutory authority. For insurance purposes, an insurance inspection department, rating bureau, or other insurance company representative may be the AHJ. In many circumstances, the property owner or his or her designated agent assumes the role of the AHJ; at government installations, the commanding officer or departmental official may be the AHJ.

A.3.2.3 Code. The decision to designate a standard as a "code" is based on such factors as the size and scope of the document, its intended use and form of adoption, and whether it contains substantial enforcement and administrative provisions.

A.3.2.6 Listed. The means for identifying listed equipment may vary for each organization concerned with product evaluation; some organizations do not recognize equipment as listed unless it is also labeled. The AHJ should utilize the system employed by the listing organization to identify a listed product.

A.3.3.1 Absolute Pressure. Measured from this reference point, the standard atmospheric pressure at sea level is [14.7 psia (an absolute pressure of 101.325 kPa)]. Absolute pressure in the inch-pound system is commonly denoted in terms of pounds per square inch absolute (psia). [**55:** A.3.3.1]

A.3.3.4 Aerosol. The base product can be dispensed from the container in such form as a mist, spray, foam, gel, or aerated powder. [**30B:** A.3.3.1]

A.3.3.7 Aisle Width (Storage Rack). See Figure A.3.3.7. [**13:** A.3.10.1]

A.3.3.13.11 Spray Area. For the purpose of this *Code*, the AHJ can define the limits of the spray area in any specific case. The spray area in the vicinity of spray application operations will necessarily vary with the design and arrangement of the equipment and with the method of operation. When spray application operations are strictly confined to predetermined spaces that are provided with adequate and reliable ventilation (such as a properly designed and constructed spray booth), the spray area will ordinarily not extend beyond this space. When spray application operations are *not* confined to an adequately ventilated space, then the spray area might extend throughout the room or building area where the spraying is conducted. [**33:** A.3.3.1.3]

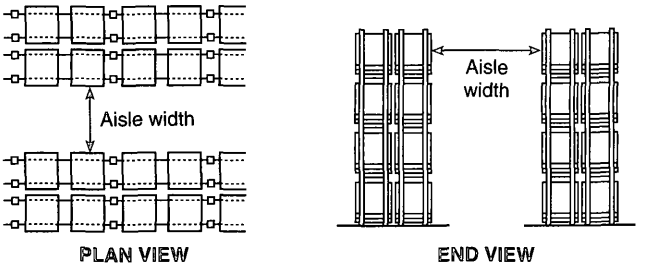

FIGURE A.3.3.7 Illustration of Aisle Width. [13:Figure A.3.10.1]

A.3.3.16 Available Height for Storage. For new sprinkler installations, the maximum height of storage is the height at which commodities can be stored above the floor where the minimum required unobstructed space below sprinklers is maintained. For the evaluation of existing situations, the maximum height of storage is the maximum existing height, if space between the sprinklers and storage is equal to or greater than required. [**13:** A.3.9.2]

A.3.3.17 Baled Cotton. See Table A.3.3.17.

The Joint Cotton Industry Bale Packaging Committee (JCIBPC) specifications for baling of cotton now requires that all cotton bales be secured with wire bands, polyester plastic strapping, or cold-rolled high tensile steel strapping, and then covered in fully coated or strip-coated woven polypropylene, polyethylene film, or burlap.

A.3.3.17.2 Densely Packed Baled Cotton. Experimental work by the U.S. Department of Agriculture, and others (Wakelyn and Hughs, 2002), investigated the flammability of cotton bales with a packing density of at least 22 lb/ft^3 (360 kg/m^2). The research showed that such cotton bales (densely packed cotton bales) did not undergo self-heating nor spontaneous combustion, and that the likelihood of sustained smoldering combustion internal to the cotton bale, creating a delayed fire hazard, was extremely low. The same research also showed that, when the cotton bales were exposed to smoldering cigarettes, matches, and open flames (including the gas burner ignition source used for the mattress tests, ASTM E 1590, *Standard*

Table A.3.3.17 Typical Cotton Bale Types and Approximate Sizes

	Dimensions		Average Weight		Volume		Density	
Bale Type	in.	mm	lb	kg	ft^3	m^3	lb/ft^3	kg/m^3
Compressed, standard	57 × 29 × 23	1448 × 736 × 584	500	226.8	22.0	0.62	22.7	366
Gin, standard	55 × 31 × 21	1397 × 787 × 533	500	226.8	20.7	0.58	24.2	391
Compressed, universal	58 × 25 × 21	1475 × 635 × 533	500	226.8	17.6	0.50	28.4	454
Gin, universal	55 × 26 × 21	1397 × 660 × 533	500	226.8	17.4	0.49	28.7	463
Compressed, high density	58 × 22 × 21	1473 × 559 × 533	500	226.8	15.5	0.44	32.2	515
Densely packed baled cotton	55 × 21 × 27.6 to 35.4	1400 × 530 × 700 to 900	500	226.8	21.1	0.60	22.0	360

Test Method for Fire Testing of Mattresses, and California Technical Bulletin 129), the probability of initiating flaming combustion was at such a low level as not to qualify the densely packed cotton bales as flammable solids. These investigations resulted in harmonization between the U.S. Department of Transportation (49 CFR 172.102, note 137), the United Nations Recommendations on the Transport of Dangerous Goods, the International Maritime Organization (the International Maritime Dangerous Goods Code), and the International Civil Aviation Organization's Technical Instructions, with the removal of the flammable solid designation from densely packed cotton bales, complying with ISO 8115, *Cotton Bales — Dimensions and Density*, and the exemption of such cotton bales from the corresponding transportation hazardous materials regulations.

A.3.3.21.1 Valve-Regulated (VRLA). In VRLA batteries, the liquid electrolyte in the cells is immobilized in an absorptive glass mat (AGM cells or batteries) or by the addition of a gelling agent (gel cells or gelled batteries).

A.3.3.21.2 Vented (Flooded). Flooded lead-acid batteries have a provision for the user to add water to the cell and are equipped with a flame-arresting vent that permits the escape of hydrogen and oxygen gas from the cell in a diffused manner such that a spark, or other ignition source, outside the cell will not ignite the gases inside the cell.

A.3.3.25 Boiling Point. At the boiling point, the surrounding atmospheric pressure can no longer hold the liquid in the liquid state and the liquid boils. A low boiling point is indicative of a high vapor pressure and a high rate of evaporation. [**30:** A.1.7.2.1]

A.3.3.26 Boil-Over. Boil-over occurs when the residues from surface burning become more dense than the unburned oil and sink below the surface to form a hot layer, which progresses downward much faster than the regression of the liquid surface. When this hot layer, called a "heat wave," reaches water or water-in-oil emulsion in the bottom of the tank, the water is first superheated and then boils almost explosively, overflowing the tank. Oils subject to boil-over consist of components having a wide range of boiling points, including both light ends and viscous residues. These characteristics are present in most crude oils and can be produced in synthetic mixtures.

A boil-over is an entirely different phenomenon from a slop-over or froth-over. Slop-over involves a minor frothing that occurs when water is sprayed onto the hot surface of a burning oil. Froth-over is not associated with a fire but results when water is present or enters a tank containing hot viscous oil. Upon mixing, the sudden conversion of water to steam causes a portion of the tank contents to overflow. [**30:** A.3.3.5]

A.3.3.27 Building. The term *building* is to be understood as if followed by the words *or portions thereof. (See also 3.3.231, Structure.)* [***101:*** A.3.3.28]

A.3.3.27.1 Airport Terminal Building. The term *terminal* is sometimes applied to airport facilities other than those serving passengers, such as cargo and freight facilities and fueling-handling facilities. These facilities are covered by other NFPA standards such as NFPA 30. [**415:** A.3.3.4]

A.3.3.27.5 Existing Building. With respect to judging whether a building should be considered existing, the deciding factor is not when the building was designed or when construction started but, rather, the date plans were approved for construction by the appropriate AHJ. [***101:*** A.3.3.28.5]

A.3.3.27.6 High-Rise Building. It is the intent of this definition that, in determining the level from which the highest occupiable floor is to be measured, the enforcing agency should exercise reasonable judgment, including consideration of overall accessibility to the building by fire department personnel and vehicular equipment. Where a building is situated on a sloping terrain and there is building access on more than one level, the enforcing agency might select the level that provides the most logical and adequate fire department access. [***5000:*** A.3.3.65.10]

A.3.3.27.7 Important Building. Examples of important buildings might include occupied buildings where egress within 2 minutes cannot be reasonably expected, and control buildings that require presence of personnel for orderly shutdown of important or hazardous processes. Important buildings can also include unprotected storage where products from fire can harm the community or the environment, or buildings that contain high-value contents or critical equipment or supplies. [**30:** A.3.3.6.2]

A.3.3.38 Chip. Chips are usually ¼ in. to 1¼ in. (6.4 mm to 31.8 mm) in size, with nothing finer than that which is retainable on a ¼ in. (6.4 mm) screen; however, blower and conveyor systems can create some fine dust particles after screening.

A.3.3.49 Combustible Dust. Dusts traditionally have been defined as a material 420 μm or smaller (capable of passing through a U.S. No. 40 standard sieve). Combustible particulates with an effective diameter of less than 420 μm should be deemed to fulfill the criterion of the definition. However, flat platelet-shaped particles, flakes, or particles of fibers with lengths that are large compared to their diameter usually do not pass through a 420 μm sieve yet still pose a deflagration hazard. Furthermore, many particulates accumulate electrostatic charge in handling, causing them to attract each other, forming agglomerates. Often agglomerates behave as if they were larger particles, yet when they are dispersed they present a significant hazard. Consequently, it can be inferred that any particle that has a surface area to volume ratio greater than that of a 420 μm diameter sphere should also be deemed a combustible dust.

Any time a combustible dust is processed or handled, a potential for deflagration exists. The degree of deflagration hazard varies, depending on the type of combustible dust and processing methods used.

A dust explosion has the following four requirements:

(1) Combustible dust
(2) Dust dispersion in air or other oxidant at or exceeding the minimum explosible concentration (MEC)
(3) Ignition source such as an electrostatic discharge, an electric current arc, a glowing ember, a hot surface, welding slag, frictional heat, or a flame
(4) Confinement

Evaluation of the hazard of a combustible dust should be determined by the means of actual test data. Each situation should be evaluated and applicable tests selected. The following list represents the factors that are sometimes used in determining the deflagration hazard of a dust:

(1) Minimum explosible concentration (MEC)
(2) Minimum ignition energy (MIE)
(3) Particle size distribution
(4) Moisture content as received and as tested
(5) Maximum explosion pressure at optimum concentration

(6) Maximum rate of pressure rise at optimum concentration
(7) K_{St} (normalized rate of pressure rise) as defined in ASTM E 1226, *Test Method for Pressure and Rate of Pressure Rise for Combustible Dusts*
(8) Layer ignition temperature
(9) Dust cloud ignition temperature
(10) Limiting oxidant concentration (LOC) to prevent ignition
(11) Electrical volume resistivity
(12) Charge relaxation time
(13) Chargeability [**654:** A.3.3.4]

A.3.3.50 Combustible Fiber. Combustible fibers can include cotton, sisal, henequen, ixtle, jute, hemp, tow, cocoa fiber, oakum, baled waste, baled wastepaper, kapok, hay, straw, excelsior, Spanish moss, or other like materials.

A.3.3.54 Combustible Waste. These materials include but are not limited to all combustible fibers, hay, straw, hair, feathers, down, wood shavings, turnings, all types of paper products, soiled cloth trimmings and cuttings, rubber trimmings and buffings, metal fines, and any mixture of the previously listed items, or any other salvageable combustible waste materials.

A.3.3.57 Common Path of Travel. Common path of travel is measured in the same manner as travel distance but terminates at that point where two separate and distinct routes become available. Paths that merge are common paths of travel. [***101:*** A.3.3.38]

A.3.3.58.1 Fire Compartment. Additional fire compartment information is contained in 8.2.2 of NFPA *101*.

In the provisions for fire compartments utilizing the outside walls of a building, it is not intended that the outside wall be specifically fire resistance rated unless required by other standards. Likewise, it is not intended that outside windows or doors be protected, unless specifically required for exposure protection by another section of this *Code*, NFPA *101*, or by other standards. [***101:*** A.3.3.39.1]

A.3.3.58.2 Smoke Compartment. Where smoke compartments using the outside walls or the roof of a building are provided, it is not intended that outside walls or roofs or any openings therein be capable of resisting the passage of smoke. Application of smoke compartment criteria where required elsewhere in NFPA *101*, should be in accordance with Section 8.5 of NFPA *101*. [***101:*** A.3.3.39.2]

A.3.3.64 Consumer Fireworks Retail Sales (CFRS) Stand. Stands can include, but are not limited to, small buildings, plywood or sheet metal structures, manufactured buildings, semitrailers, trailers, shipping containers, or similar structures or facilities. [**1124:** A.3.3.19]

A.3.3.67 Conventional Pallets. See Figure A.3.3.67. [**13:** A.3.10.4]

A.3.3.71 Corrosive. A chemical is considered to be corrosive if, when tested on the intact skin of albino rabbits by the method described in Appendix A to 49 CFR Part 173, it destroys or changes irreversibly the structure of the tissue at the site of contact following an exposure period of 4 hours. This term does not refer to action on inanimate surfaces.

A.3.3.72 Covered Fuse. The purpose of the covered fuse is to minimize the accidental ignition of fireworks in a retail display by a lighted cigarette or a match, a cigarette lighter, or similar small open flame, as well as to reduce the potential for the rapid involvement of fireworks in, and the subsequent acceleration of, a fire originating within a retail display of consumer fireworks.

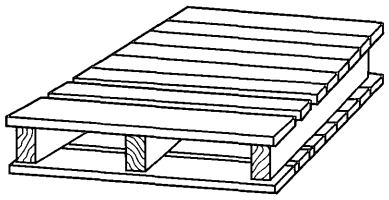

Conventional pallet

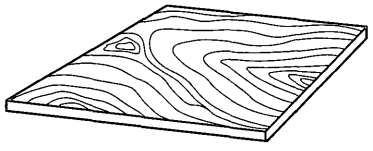

Solid flat bottom
wood pallet (slave pallet)

FIGURE A.3.3.67 Typical Pallets. [13:Figure A.3.10.4]

Protection of the fuse can be provided by means of tape covering the exposed (ignitable) end of a safety fuse or by covering the fuse or the entire fireworks device or group of fireworks devices with paper, plastic, cardboard, paperboard, or similar or equivalent materials.

Examples of covered fuses of fireworks devices include those contained within packaged assortments, multi-item packages, and similar retail merchandise arrangements that are displayed within unopened and unperforated containers so that they are not exposed to view, or they are covered with, or are contained within, plastic wrap, paper, paperboard, cardboard, or other types of wrapping or packaging materials designed to prevent the fuses from coming into direct contact with an ignition source. [**1124:** A.3.3.22]

A.3.3.75 Cultural Properties. Such properties include, but are not limited to, museums, libraries, historic structures, and places of worship. [**914:** A.3.2.17]

A.3.3.78.2 Fixed-Temperature Detector. The difference between the operating temperature of a fixed-temperature device and the surrounding air temperature is proportional to the rate at which the temperature is rising. The rate is commonly referred to as *thermal lag*. The air temperature is always higher than the operating temperature of the device.

Typical examples of fixed-temperature sensing elements are as follows:

(1) *Bimetallic.* A sensing element comprised of two metals that have different coefficients of thermal expansion arranged so that the effect is deflection in one direction when heated and in the opposite direction when cooled.
(2) *Electrical Conductivity.* A line-type or spot-type sensing element in which resistance varies as a function of temperature.
(3) *Fusible Alloy.* A sensing element of a special composition metal (eutectic) that melts rapidly at the rated temperature.
(4) *Heat-Sensitive Cable.* A line-type device in which the sensing element comprises, in one type, two current-carrying wires separated by heat-sensitive insulation that softens at the rated temperature, thus allowing the wires to make electrical contact. In another type, a single wire is centered in a metallic tube, and the intervening space is filled with a substance that becomes conductive at a critical temperature, thus establishing electrical contact between the tube and the wire.

(5) *Liquid Expansion.* A sensing element comprising a liquid that is capable of marked expansion in volume in response to an increase in temperature. [*72:* A.3.3.43.7]

A.3.3.78.4 Line-Type Detector. Typical examples of line-type detectors are rate-of-rise pneumatic tubing detectors, projected beam smoke detectors, and heat-sensitive cable. [*72:* 3.3.43.10]

A.3.3.89 Exhausted Enclosure. Exhausted enclosures include laboratory hoods, exhaust fume hoods, and similar appliances and equipment used to locally retain and exhaust the gases, fumes, vapors, and mists that could be released. Rooms or areas provided with general ventilation, in themselves, are not exhausted enclosures. [*5000:* A.3.3.182.1]

A.3.3.90 Existing. See A.3.3.27.5, Existing Building. [*101:* A.3.3.68]

A.3.3.92 Exit. Exits include exterior exit doors, exit passageways, horizontal exits, exit stairs, and exit ramps. In the case of a stairway, the exit includes the stair enclosure, the door to the stair enclosure, stairs and landings inside the enclosure, the door from the stair enclosure to the outside or to the level of exit discharge, and any exit passageway and its associated doors, if such are provided, so as to discharge the stair directly to the outside. In the case of a door leading directly from the street floor to the street or open air, the exit comprises only the door.

Doors of small individual rooms, as in hotels, while constituting exit access from the room, are not referred to as exits except where they lead directly to the outside of the building from the street floor. [*101:* A.3.3.70]

A.3.3.92.1 Horizontal Exit. Horizontal exits should not be confused with egress through doors in smoke barriers. Doors in smoke barriers are designed only for temporary protection against smoke, whereas horizontal exits provide protection against serious fire for a relatively long period of time in addition to providing immediate protection from smoke. *(See 7.2.4 of NFPA 101.) [101: A.3.3.70.1]*

A.3.3.96 Explosive Material. The term *explosive material* includes, but is not limited to, dynamite, Black Powder, pellet powder, initiating explosives, detonators, safety fuses, squibs, detonating cord, igniter cord, igniters, and Display Fireworks 1.3G (Class B, Special). The term *explosive* includes any material determined to be within the scope of Title 18, United States Code, Chapter 40, and also includes any material classified as an explosive, other than Consumer Fireworks 1.4G (Class C, Common), by the Hazardous Materials Regulations of the U.S. Department of Transportation in 49 CFR.

The former classification system used by the DOT included the terms *high explosive* and *low explosive,* as further defined in A.3.3.388.3.2 of *NFPA 5000.* These terms remain in use by the U.S. Bureau of Alcohol Tobacco and Firearms (BATF). Explosive materials classified as hazard Class 1 are further defined under the current system applied by DOT. Compatibility group letters are used in concert with division numbers to specify further limitations on each division noted. For example, the letter G (as in 1.4G) identifies substances or articles that contain a pyrotechnic substance and similar materials. UN/DOT Class 1 Explosives are defined as follows:

(1) Division 1.1 explosives are explosives that are a mass explosion hazard, which is a hazard that instantaneously affects almost the entire load.
(2) Division 1.2 explosives are explosives that are a projection hazard but not a mass explosion hazard.
(3) Division 1.3 explosives are explosives that are a fire hazard and either a minor blast hazard or a minor projection hazard, or both, but not a mass explosion hazard.
(4) Division 1.4 explosives are explosives that pose a minor explosion hazard and meet both of the following criteria:
    (a) The explosive effects are largely confined to the package, and no projection of fragments of appreciable size or range is to be expected.
    (b) An external fire cannot cause virtually instantaneous explosion of almost the entire contents of the package.
(5) Division 1.5 explosives are very insensitive explosives that are comprised of substances that are a mass explosion hazard, but are so insensitive that there is very little probability of initiation or of transition from burning to detonation under normal conditions of transport.
(6) Division 1.6 explosives are extremely insensitive articles that are not a mass explosion hazard, that are comprised of articles that contain only extremely insensitive detonating substances, and that demonstrate a negligible probability of accidental initiation or propagation. [*5000:* A.3.3.388.3]

A.3.3.105 Fire Hydrant. See Figure A.3.3.105(a) and Figure A.3.3.105(b). [**25:** A.3.3.10]

A.3.3.107 Fire Lane. The traditional term *fire lane* is no longer utilized in this *Code.* However, a fire department access road that is marked and prohibits obstructions in accordance with 18.2.3.5 would meet the traditional intent of a fire lane.

A.3.3.111 Fireworks. Toy caps for use in toy pistols, toy canes, toy guns, and novelties and trick noisemakers are not considered to be fireworks *(see Annex C of NFPA 1124).* The regulations referred to limit the explosive content of each toy cap to not more than an average of 0.25 gr (16.2 mg). Also, each package containing such caps has to be labeled to indicate the maximum explosive content per cap. For information on the use of model rockets and model rocket motors, see NFPA 1122. For information on the use of high power rockets and high power rocket motors, see NFPA 1127. Model rockets, model rocket motors, high power rockets, and high power rocket motors designed, sold, and used for the purpose of propelling recoverable aero models are not considered to be fireworks. [**1124:** A.3.3.30]

A.3.3.111.1 Consumer Fireworks. Consumer fireworks are normally classified as Explosives, 1.4G and described as Fireworks, UN 0336 by the U.S. Department of Transportation (U.S. DOT) *(see Annex C of NFPA 1124).* Some small devices designed to produce audible effects are included, such as whistling devices, ground devices containing 0.8 gr (50 mg) or less of explosive composition (salute powder), and aerial devices containing 2 gr (130 mg) or less of explosive composition (salute powder) per explosive unit. Consumer fireworks that comply with the construction, chemical composition, and labeling regulations of the U.S. DOT for fireworks, 49 CFR 172, and the U.S. Consumer Product Safety Commission (CPSC) as set forth in CPSC 16 CFR 1500 and 1507, are not considered to be explosive materials for purposes of this *Code.* [**1124:** A.3.3.30.1]

A.3.3.111.2 Display Fireworks. Display fireworks are described as Fireworks, UN0335 and are classed as Explosives, 1.3G by the U.S. Department of Transportation (U.S. DOT). *(See Annex C of NFPA 1124.)*

Display fireworks include, but are not limited to, the following:

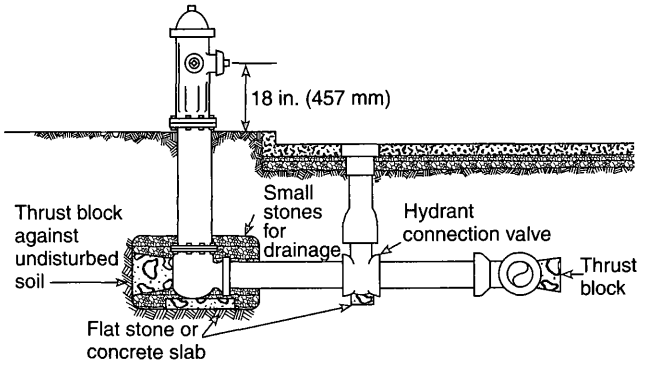

FIGURE A.3.3.105(a) Typical Fire Hydrant Connection. [25:Figure A.3.3.10(a)]

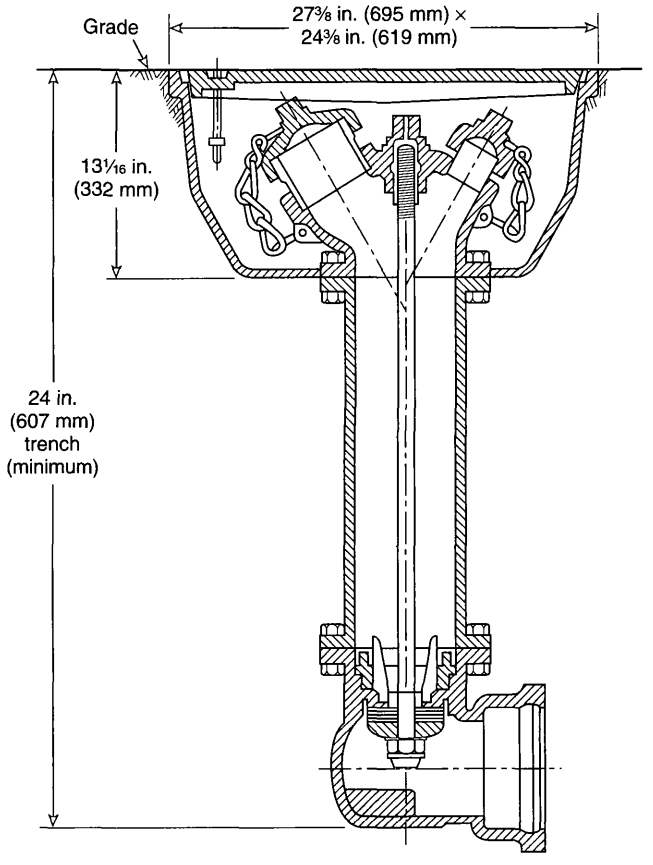

FIGURE A.3.3.105(b) Flush-Type Hydrant. [25:Figure A.3.3.10(b)]

(1) Salutes or firecrackers containing more than 2 gr (130 mg) of explosive composition (salute powder)
(2) Aerial shells containing more than 2.1 oz (60 g) of total pyrotechnic and explosive composition
(3) Other display pieces that exceed the limits for classification as consumer fireworks

Such fireworks are also described as fireworks, 49 CFR 172 by the U.S. DOT. [**1124:** A.3.3.30.2]

A.3.3.113 Flame Spread. See Section 10.2 of NFPA *101*. [***101:*** A.3.3.95]

A.3.3.116 Flash Point. Flash point is a direct measure of a liquid's ability to emit flammable vapors. The lower the flash point, the greater the risk of fire. Flash point is determined using one of several different test procedures and apparatus that are specified in 1.7.4 of NFPA 30.

A liquid that has a flash point at or below ambient temperature is easy to ignite and will burn quickly. On ignition, the spread of flame over the surface of such a liquid will be rapid, because it is not necessary for the fire to expend energy heating the liquid to generate more vapor. Gasoline is a familiar example. A liquid with a flash point above ambient temperature presents less risk because it must be heated to generate enough vapor to become ignitible; it is more difficult to ignite and presents less potential for the generation and spread of vapor. A common example is home heating oil (Fuel Oil No. 2). Home heating oil must be atomized to a fine mist in order for it to be easily ignited.

Certain solutions of liquids in water exhibit a flash point using the standard closed-cup test procedures but will not burn and could even extinguish a fire. To assist identifying such solutions, the following standards are helpful:

(1) ASTM D 4207, *Standard Test Method for Sustained Burning of Low Viscosity Liquid Mixtures by the Wick Test*
(2) ASTM D 4206, *Standard Test Method for Sustained Burning of Liquid Mixtures Using the Small Scale Open-Cup Apparatus*

Liquid mixtures that do not sustain combustion for a specified time at a specified temperature are considered to be noncombustible. The tests described in the references listed in (1) and (2) provide additional data for determining proper storage and handling of such mixtures. In a confined space, such mixtures could still create an ignitible vapor–air mixture, depending on the amount of flammable liquid in the mixture and the quantity of the spill.

Related to the flash point is the fire point. The fire point of a liquid is the temperature at which ignition of vapors will result in continued burning. As the term *flash point* suggests, the vapors generated at that temperature will flash but will not necessarily continue to burn. The difference between flash point and fire point has some significance when conducting flash point tests *[see 6.1.2 of NFPA 30 references to ASTM D 92, Standard Test Method for Flash and Fire Points by Cleveland Open Cup, and 49 CFR (U.S. Department of Transportation Hazardous Materials Regulations), Method of Testing for Sustained Combustibility.] However, a closed-cup flash point is used to classify the liquid and characterize its hazard.*

For more information, see ASTM E 502, *Standard Test Method for Selection and Use of ASTM Standards for the Determination of Flash Point of Chemicals by Closed Cup Methods,* and the *ASTM Manual on Flash Point Standards and Their Use.* [**30:** A.1.7.2.2]

A.3.3.117.1 Gross Floor Area. Where the term *floor area* is used, it should be understood to be gross floor area, unless otherwise specified. [***5000:*** A.3.3.33.8.1]

A.3.3.119 Fugitive Emissions. These include leaks from pump seals, valve packing, flange gaskets, compressor seals, process drains, etc. [**30:** A.3.3.17]

A.3.3.122.1 Compressed Gas. The states of a compressed gas are categorized as follows:

(1) Nonliquefied compressed gases are gases, other than those in solution, that are in a compressed gas container under the charged pressure and are entirely gaseous at a temperature of 20°C (68°F).
(2) Liquefied compressed gases are gases that are in a compressed gas container under the charged pressure and are partially liquid at a temperature of 20°C (68°F).
(3) Compressed gases in solution are nonliquefied gases that are dissolved in a solvent.
(4) Compressed gas mixtures consist of a mixture of two or more compressed gases contained in a compressed gas container, the hazard properties of which are represented by the properties of the mixture as a whole. [*5000*: A.3.3.270.1

A.3.3.122.6 Inert Gas. Examples of inert gases are argon, helium, krypton, neon, nitrogen, and xenon.

A.3.3.122.12 Other Gas. A gas classified as an "Other Gas" might be a nonflammable gas or an inert gas. [**55:** A.3.3.29.9]

A.3.3.122.18 Unstable Reactive Gas. Unstable reactive materials are subdivided into five classifications. Class 4 materials are materials that in themselves are readily capable of detonation or explosive decomposition or explosive reaction at normal temperatures and pressures. They include the following:

(1) Materials that are sensitive to localized thermal or mechanical shock at normal temperatures and pressures
(2) Materials that have an instantaneous power density (product of heat of reaction and reaction rate) at 482°F (250°C) of 1000 W/mL or greater

Class 3 materials are materials that in themselves are capable of detonation or explosive decomposition or explosive reaction but require a strong initiating source or heat under confinement before initiation. Class 3 materials include the following:

(1) Materials that have an instantaneous power density (product of heat of reaction and reaction rate) at 482°F (250°C) at or above 100 W/mL and below 1000 W/mL
(2) Materials that are sensitive to thermal or mechanical shock at elevated temperatures and pressures
(3) Materials that react explosively with water without requiring heat or confinement

Class 2 materials are materials that readily undergo violent chemical change at elevated temperatures and pressures, including the following:

(1) Materials that have an instantaneous power density (product of heat of reaction and reaction rate) at 482°F (250°C) at or above 10 W/mL and below 100 W/mL
(2) Materials that react violently with water or form potentially explosive mixtures with water

Class 1 materials are materials that in themselves are normally stable but that can become unstable at elevated temperatures and pressures, including the following:

(1) Materials that have an instantaneous power density (product of heat of reaction and reaction rate) at 482°F (250°C) at or above 0.01 W/mL and below 10 W/mL
(2) Materials that react vigorously with water, but not violently
(3) Materials that change or decompose on exposure to air, light, or moisture

Class 0 materials are materials that in themselves are normally stable, even under fire conditions, including the following:

(1) Materials that have an instantaneous power density (product of heat of reaction and reaction rate) at 482°F (250°C) below 0.01 W/mL
(2) Materials that do not react with water
(3) Materials that do not exhibit an exotherm at temperatures less than or equal to 932°F (500°C) when tested by differential scanning calorimetry [**55:** A.3.3.29.13]

A.3.3.123 Gas Cabinet. Doors and access ports for exchanging cylinders and accessing pressure-regulating controls are permitted to be included. [*5000*: A.3.3.271]

A.3.3.128 Hazard of Contents. Hazardous materials are materials that present physical or health hazards and are regulated by the *Code*. The categories of materials classified as physical hazards, health hazards, or both have been established in concert with those categories identified by OSHA in 29 CFR that are used by preparers of Material Safety Data Sheets (MSDS). In some cases, the hazard categories are further subdivided into classes that have long been established by NFPA standards. For example, while OSHA recognizes flammable liquids as a broad class, including those that are combustible, such liquids are further categorized by building and fire codes with respect to degree of hazard under the system of classification used by NFPA to include Class I, Class II, and Class III liquids. They are further subdivided within these classes to Class IA, Class IB and so forth. A similar approach is used for materials in other categories where there are subcategories of hazard established by existing NFPA standards, including oxidizers, unstable reactives, organic peroxides, water reactives, and others.

Under the classification system used by OSHA, a hazardous material can have one or more physical or health hazards in categories not currently regulated by the *Code*; for example, irritants, sensitizers, radioactive materials, etiological agents, and others. This is not to say that these materials are not hazardous materials, but rather that the *Code* does not provide specific regulation for the hazard category represented.

The *Code* defines contents as either high hazard, low hazard, or ordinary hazard. The category of high hazard, which includes hazardous materials, is subdivided into groups in which the hazards of the groups are comparable, that is, high hazard Level 1-5. *(See also A.34.1.1 of NFPA 5000.) [5000: A.6.3.2]*

A.3.3.128.2 Low Hazard Contents. Chapter 42 of NFPA *101* recognizes storage of noncombustible materials as low hazard. In other occupancies, it is assumed that, even where the actual contents hazard is normally low, there is sufficient likelihood that some combustible materials or hazardous operations will be introduced in connection with building repair or maintenance, or some psychological factor might create conditions conducive to panic, so that the egress facilities cannot safely be reduced below those specified for ordinary hazard contents. [*101*: A.6.2.2.2]

A.3.3.128.3 Ordinary Hazard Contents. Ordinary hazard classification represents the conditions found in most buildings and is the basis for the general requirements of NFPA *101*.

The fear of poisonous fumes or explosions is necessarily a relative matter to be determined on a judgment basis. All smoke contains some toxic fire gases but, under conditions of ordinary hazard, there should be no unduly dangerous exposure during the period necessary to escape from the fire area, assuming there are proper exits. [*101*: A.6.2.2.3]

A.3.3.129 Hazard Rating. The criteria for hazard rating are as defined in NFPA 704. [**55:** A.3.3.35]

A.3.3.133 Hazardous Reaction or Hazardous Chemical Reaction. These dangers might include, but are not limited to, toxic effects, reaction speed (including detonation), exothermic reaction, or production of unstable or reactive materials. [**30:** A.3.3.20]

A.3.3.134 Heliport. The term *heliport* applies to all sites used or intended to be used for the landing and takeoff of helicopters. [**418:** A.1.3.8]

A.3.3.138 Immediately Dangerous to Life and Health (IDLH). This level is established by the National Institute for Occupational Safety and Health (NIOSH). If adequate data do not exist for precise establishment of IDLH data, an independent certified industrial hygienist, industrial toxicologist, or appropriate regulatory agency should make such determination. [**55:** A.3.3.36]

A.3.3.140 Incident Commander. This is equivalent to the on-scene incident commander. [**472:** A.3.3.38]

A.3.3.146.1 Ceiling Limit. The ceiling limits utilized are to be those published in 29 CFR 1910.1000. [***5000:*** A.3.3.355.1]

A.3.3.146.2 Permissible Exposure Limit (PEL). The maximum permitted time-weighted average exposures to be utilized are those published in 29 CFR 1910.1000. [**55:** A.3.3.38.2]

A.3.3.146.3 Short-Term Exposure Limit (STEL). STEL limits are published in 29 CFR 1910.1000. [**55:** A.3.3.38.3]

A.3.3.147 Limited-Combustible (Material). Materials subject to increase in combustibility or flame spread index beyond the limits herein established through the effects of age, moisture, or other atmospheric condition are considered combustible. *(See NFPA 259 and NFPA 220.)* [***101:*** A.3.3.150.2]

A.3.3.156.6 Highly Toxic Material. Mixtures of highly toxic materials with ordinary materials, such as water, might not warrant classification as highly toxic. While categorization is basically simple in application, any hazard evaluation that is required for the precise categorization of highly toxic material is required to be performed by experienced, technically competent persons. [***5000:*** A.3.3.388.18.1]

A.3.3.156.12 Unstable (Reactive) Material. Unstable (reactive) material is classified as follows:

(1) Class 4 unstable (reactive) materials are those that, in themselves, are readily capable of detonation, explosive decomposition, or explosive reaction at normal temperatures and pressures and include, among others, materials that are sensitive to localized thermal or mechanical shock at normal temperatures and pressures.
(2) Class 3 unstable (reactive) materials are those that, in themselves, are capable of detonation, explosive decomposition, or explosive reaction, but that require a strong initiating source or that must be heated under confinement before initiation, and include, among others, materials that are sensitive to thermal or mechanical shock at elevated temperatures and pressures.
(3) Class 2 unstable (reactive) materials are those that readily undergo violent chemical change at elevated temperatures and pressures and include, among others, materials that exhibit an exotherm at temperatures less than or equal to 30°F (−1°C) when tested by differential scanning calorimetry.
(4) Class 1 unstable (reactive) materials are those that, in themselves, are normally stable, but that can become unstable at elevated temperatures and pressures and include among others, materials that change or decompose on exposure to air, light, or moisture and that exhibit an exotherm at temperatures greater than 30°F (−1°C), but less than or equal to 57°F (14°C), when tested by differential scanning calorimetry. [***5000:*** A.3.3.388.19]

A.3.3.156.13 Water-Reactive Material. Water-reactive materials are subdivided as follows:

(1) Class 3 materials are those that react explosively with water without requiring heat or confinement.
(2) Class 2 materials are those that might form potentially explosive mixtures with water.
(3) Class 1 materials are those that might react with water with some release of energy, but not violently. [***5000:*** A.3.3.388.20]

A.3.3.158 Maximum Allowable Quantity (MAQ). Quantities are permitted to exceed the MAQ when they are located in an area complying with protection levels 1–5 in accordance with the building code.

A.3.3.159 Means of Egress. A means of egress comprises the vertical and horizontal travel and includes intervening room spaces, doorways, hallways, corridors, passageways, balconies, ramps, stairs, elevators, enclosures, lobbies, escalators, horizontal exits, courts, and yards. [***101:*** A.3.3.151]

A.3.3.165.1 Ambulatory Health Care Occupancy. It is not the intent that occupants be considered to be incapable of self-preservation just because they are in a wheelchair or use assistive walking devices, such as a cane, a walker, or crutches. Rather it is the intent to address emergency care centers that receive patients who have been rendered incapable of self-preservation due to the emergency, such as being rendered unconscious as a result of an accident or being unable to move due to sudden illness. [***101:*** A.3.3.168.1]

A.3.3.165.2 Apartment Building. The *Code* specifies that, wherever there are three or more living units in a building, the building is considered an apartment building and is required to comply with either Chapter 30 or Chapter 31 of NFPA *101*, as appropriate. Townhouse units are considered to be apartment buildings if there are three or more units in the building. The type of wall required between units in order to consider them to be separate buildings is normally established by the AHJ. If the units are separated by a wall of sufficient fire resistance and structural integrity to be considered as separate buildings, then the provisions of Chapter 24 of NFPA *101*, apply to each townhouse. Condominium status is a form of ownership, not occupancy; for example, there are condominium warehouses, condominium apartments, and condominium offices. [***5000:*** A.3.3.65.4]

A.3.3.165.3 Assembly Occupancy. Assembly occupancies might include the following:

(1) Armories
(2) Assembly halls
(3) Auditoriums
(4) Bowling lanes
(5) Club rooms
(6) College and university classrooms, 50 persons and over
(7) Conference rooms
(8) Courtrooms
(9) Dance halls
(10) Drinking establishments
(11) Exhibition halls
(12) Gymnasiums

(13) Libraries
(14) Mortuary chapels
(15) Motion picture theaters
(16) Museums
(17) Passenger stations and terminals of air, surface, underground, and marine public transportation facilities
(18) Places of religious worship
(19) Pool rooms
(20) Recreation piers
(21) Restaurants
(22) Skating rinks
(23) Special amusement buildings, regardless of occupant load
(24) Theaters

Assembly occupancies are characterized by the presence or potential presence of crowds with attendant panic hazard in case of fire or other emergency. They are generally open or occasionally open to the public, and the occupants, who are present voluntarily, are not ordinarily subject to discipline or control. Such buildings are ordinarily occupied by able-bodied persons and are not used for sleeping purposes. Special conference rooms, snack areas, and other areas incidental to, and under the control of, the management of other occupancies, such as offices, fall under the 50-person limitation.

Restaurants and drinking establishments with an occupant load of fewer than 50 persons should be classified as mercantile occupancies.

For special amusement buildings, see 12.4.7 and 13.4.7 of NFPA *101*. [***101***: A.3.3.168.2]

A.3.3.165.5 Business Occupancy. Business occupancies include the following:

(1) Air traffic control towers (ATCTs)
(2) Ambulatory outpatient clinics
(3) City halls
(4) College and university instructional buildings, classrooms under 50 persons, and instructional laboratories
(5) Courthouses
(6) Dentists' offices
(7) Doctors' offices
(8) General offices
(9) Town halls

Doctors' and dentists' offices are included, unless of such character as to be classified as ambulatory health care occupancies. *(See 3.3.165.1.)*

Birth centers occupied by fewer than four patients, not including infants, at any one time; not providing sleeping facilities for four or more occupants; and not providing treatment procedures that render four or more patients, not including infants, incapable of self-preservation at any one time should be classified as business occupancies. For birth centers occupied by patients not meeting these parameters, see Chapter 19 of NFPA *101*.

Service facilities common to city office buildings such as newsstands, lunch counters serving fewer than 50 persons, barber shops, and beauty parlors are included in the business occupancy group.

City halls, town halls, and courthouses are included in the business occupancy group insofar as their principal function is the transaction of public business and the keeping of books and records. Insofar as they are used for assembly purposes, they are classified as assembly occupancies.

In evaluating the appropriate classification of laboratories, the AHJ should treat each case individually, based on the extent and nature of the associated hazards. For laboratories within the scope of NFPA 45, the occupancies are defined in NFPA 45, Section 3.3, as follows:

(1) Noninstructional labs are considered industrial.
(2) Labs within the scope of NFPA 99 are considered health care.
(3) Instructional labs for grades 12 and below are considered educational.
(4) Labs for grades above grade 12 and Class D labs are business occupancies. [***5000***: A.3.3.424.2]

A.3.3.165.6 Day-Care Home. A day-care home is generally located within a dwelling unit. [***101***: A.3.3.122.1]

A.3.3.165.7 Day-Care Occupancy. Day-care occupancies include the following:

(1) Adult day-care occupancies, except where part of a health care occupancy
(2) Child day-care occupancies
(3) Day-care homes
(4) Kindergarten classes that are incidental to a child day-care occupancy
(5) Nursery schools

In areas where public schools offer only half-day kindergarten programs, many child day-care occupancies offer state-approved kindergarten classes for children who need full-day care. As these classes are normally incidental to the day-care occupancy, the requirements of the day-care occupancy should be followed. [***5000***: A.3.424.3]

A.3.3.165.8 Detention and Correctional Occupancy. Detention and correctional occupancies include the following:

(1) Adult and juvenile substance abuse centers
(2) Adult and juvenile work camps
(3) Adult community residential centers
(4) Adult correctional institutions
(5) Adult local detention facilities
(6) Juvenile community residential centers
(7) Juvenile detention facilities
(8) Juvenile training schools [***5000***: A.3.3.424.4]

It is not the intent to classify as detention and correctional occupancies the areas of health care occupancies where doors are locked against patient egress where needed for the clinical needs of the patients. For example, a dementia treatment center can be adequately protected by the health care occupancies requirements of Chapter 18 of *NFPA 101*. *[See 18.1.1.1.5, 18.2.2.2.2, 18.2.2.2.4(1), and 18.2.2.2.5 of NFPA 101.]*

The one-resident threshold requirement of 22.1.1.1.4 of NFPA *101* is not meant to force a residential occupancy, where security is imposed on one or more occupants, to be reclassified as a detention and correctional occupancy.

It is not the intent to classify as detention and correctional occupancies the areas of health care occupancies where doors are locked against patient egress where needed for the clinical needs of the patients. For example, a dementia treatment center can be adequately protected by the health care occupancies requirements of Chapter 19 of *NFPA 101*. *[See 19.1.1.1.5, 19.2.2.2.2, 19.2.2.2.4(1), and 19.2.2.2.5 of NFPA 101.]*

The one-resident threshold requirement of 23.1.1.1.4 of NFPA *101* is not meant to force a residential occupancy, where security is imposed on one or more occupants, to be reclassified as a detention and correctional occupancy. [***101***: A.23.1.1.1.4]

A.3.3.165.9 Dormitory. Rooms within dormitories intended for the use of individuals for combined living and sleeping purposes are guest rooms or guest suites. Examples of dormitories are college dormitories, fraternity and sorority houses, and military barracks. [*101*: A.3.3.53]

A.3.3.165.10 Educational Occupancy. Educational occupancies include the following:

(1) Academies
(2) Kindergartens
(3) Schools

An educational occupancy is distinguished from an assembly occupancy in that the same occupants are regularly present.

In evaluating the appropriate classification of laboratories, the AHJ should treat each case individually, based on the extent and nature of the associated hazards. For laboratories within the scope of NFPA 45, the occupancies are defined in NFPA 45, Section 3.3, as follows:

(1) Noninstructional labs are considered industrial.
(2) Labs within the scope of NFPA 99 are considered health care.
(3) Instructional labs for grades 12 and below are considered educational.
(4) Labs for grades above grade 12 and Class D labs are business occupancies. [*5000*: A.3.3.424.5]

A.3.3.165.11 Health Care Occupancy. Health care occupancies include the following:

(1) Ambulatory health care facilities
(2) Hospitals
(3) Limited care facilities
(4) Nursing homes

Occupants of health care occupancies typically have physical or mental illness, disease, or infirmity. They also include infants, convalescents, or infirm aged persons.

In evaluating the appropriate classification of laboratories, the AHJ should treat each case individually, based on the extent and nature of the associated hazards. For laboratories within the scope of NFPA 45, the occupancies are defined in NFPA 45, Section 3.3, as follows:

(1) Noninstructional labs are considered industrial.
(2) Labs within the scope of NFPA 99 are considered health care.
(3) Instructional labs for grades 12 and below are considered educational.
(4) Labs for grades above grade 12 and Class D labs are business occupancies. [*5000*: A.3.3.424.6]

A.3.3.165.13 Hotel. So-called apartment hotels should be classified as hotels because they are potentially subject to the same transient occupancy as hotels. Transients are those who occupy accommodations for less than 30 days. [*101*: A.3.3.125]

A.3.3.165.14 Industrial Occupancy. Industrial occupancies include the following:

(1) Drycleaning plants
(2) Factories of all kinds
(3) Food processing plants
(4) Gas plants
(5) Hangars (for servicing/maintenance)
(6) Laundries
(7) Power plants
(8) Pumping stations
(9) Refineries
(10) Sawmills
(11) Telephone exchanges

In evaluating the appropriate classification of laboratories, the AHJ should treat each case individually, based on the extent and nature of the associated hazards. For laboratories within the scope of NFPA 45, the occupancies are defined in NFPA 45, Section 3.3, as follows:

(1) Noninstructional labs are considered industrial.
(2) Labs within the scope of NFPA 99 are considered health care.
(3) Instructional labs for grades 12 and below are considered educational.
(4) Labs for grades above grade 12 and Class D labs are business occupancies. [*5000*: A.3.3.424.7]

A.3.3.165.15 Limited Care Facility. Limited care facilities and residential board and care occupancies both provide care to people with physical and mental limitations. However, the goals and programs of the two types of occupancies differ greatly. The requirements in NFPA *101* for limited care facilities are based on the assumption that these are medical facilities, that they provide medical care and treatment, and that the patients are not trained to respond to the fire alarm; that is, the patients do not participate in fire drills but, rather, await rescue. The requirements for residential board and care occupancies are based on the assumption that the residents are provided with personal care and activities that foster continued independence, that the residents are encouraged and taught to overcome their limitations, and that most residents are trained to respond to fire drills to the extent they are able. [*101*: A.3.3.77.2]

A.3.3.165.17 Mercantile Occupancy. Mercantile occupancies include the following:

(1) Auction rooms
(2) Department stores
(3) Drugstores
(4) Restaurants with fewer than 50 persons
(5) Shopping centers
(6) Supermarkets

Office, storage, and service facilities incidental to the sale of merchandise and located in the same building should be considered part of the mercantile occupancy classification. [*5000*: A.3.3.424.8]

A.3.3.165.20 Parking Structure. A parking structure is permitted to be enclosed or open, use ramps, and use mechanical control push-button-type elevators to transfer vehicles from one floor to another. Motor vehicles are permitted to be parked by the driver or an attendant or are permitted to be parked mechanically by automatic facilities. Where automatic parking is provided, the operator of those facilities is permitted either to remain at the entry level or to travel to another level. Motor fuel is permitted to be dispensed, and motor vehicles are permitted to be serviced in a parking structure in accordance with NFPA 30A. [88A: A.3.3.2]

A.3.3.165.22 Residential Board and Care Occupancy. The following are examples of facilities that are classified as residential board and care occupancies:

(1) Group housing arrangement for physically or mentally handicapped persons who normally attend school in the community, attend worship in the community, or otherwise use community facilities

(2) Group housing arrangement for physically or mentally handicapped persons who are undergoing training in preparation for independent living, for paid employment, or for other mainstream community activities
(3) Group housing arrangement for the elderly that provides personal care services but does not provide nursing care
(4) Facilities for social rehabilitation, alcoholism, drug abuse, or mental health problems that contain a group housing arrangement and that provide personal care services but do not provide acute care
(5) Assisted living facilities
(6) Other group housing arrangements that provide personal care services but not nursing care [***5000***: A.3.3.424.11]

A.3.3.165.23 Residential Occupancy. Residential occupancies are treated as separate occupancies in this *Code* as follows:

(1) One- and two-family dwellings (Chapter 24 of NFPA *101*)
(2) Lodging or rooming houses (Chapter 26 of NFPA *101*)
(3) Hotels, motels, and dormitories (Chapters 28 and 29 of NFPA *101*)
(4) Apartment buildings (Chapters 30 and 31 of NFPA *101*) [***101***: A.3.3.168.13]

A.3.3.165.24.3 Motor Fuel Dispensing Facility Located Inside a Building. The motor fuel dispensing facility can be either enclosed or partially enclosed by the building walls, floors, ceilings, or partitions or can be open to the outside. The motor fuel dispensing area is that area required for dispensing of fuels to motor vehicles. Dispensing of fuel at manufacturing, assembly, and testing operations is not included within this definition. [**30A:** A.3.3.11.3]

A.3.3.165.25 Storage Occupancy. Storage occupancies include the following:

(1) Barns
(2) Bulk oil storage
(3) Cold storage
(4) Freight terminals
(5) Grain elevators
(6) Hangars (for storage only)
(7) Parking structures
(8) Stables
(9) Truck and marine terminals
(10) Warehouses

Storage occupancies are characterized by the presence of relatively small numbers of persons in proportion to the area. [***5000***: A.3.3.424.14]

A.3.3.165.25.1 Mini-Storage Building. Garage units that are primarily intended for vehicular storage as part of a multifamily development are not intended to be classified as mini-storage buildings.

A.3.3.171.1 Organic Peroxide Formulation. Terms such as *accelerator, catalyst, initiator,* and so forth, are sometimes used to describe organic peroxide formulations. These terms are misleading because they can also refer to materials that are not or do not contain organic peroxides, some of which might present increased hazard when mixed with organic peroxides. [**432:** A.3.3.6]

A.3.3.173 Oxidizer. Examples of other oxidizing gases include bromine, chlorine, and fluorine.

The classification of oxidizers is based on the technical committee's evaluation of available scientific and technical data, actual experience, and its considered opinion. Classification refers to the pure oxidizer. Gross contamination can cause oxidizers of all classes to undergo exothermic or explosive reaction, particularly if they also are subjected to confinement and heating. *(See Sections B.2 through B.5 of NFPA 430 for oxidizer classifications.)* [**430:** A.3.3.7]

A.3.3.174 Packaged Fireworks Merchandise. Packaged fireworks merchandise is generally fireworks items or groups of fireworks items that have been packaged by the manufacturer or distributor before they are offered for sale to the consumer. The packaging arrangement completely encapsulates the fireworks item or items within paperboard, cardboard, plastic wrap, or similar materials or combinations of materials. Such encapsulation ensures that a person must puncture, tear, unseal, or break open the package or otherwise damage or destroy the packaging materials in order to gain access to, and directly handle, each individual fireworks item to expose its fuse. [**1124:** A.3.3.50]

A.3.3.181 Personal Care. Personal care involves responsibility for the safety of the resident while inside the building. Personal care might include daily awareness by management of the resident's functioning and whereabouts, making and reminding a resident of appointments, the ability and readiness for intervention in the event of a resident experiencing a crisis, supervision in the areas of nutrition and medication, and actual provision of transient medical care. [***101***: A.3.3.181]

A.3.3.188 Process or Processing. The sequence can be inclusive of both physical and chemical operations, unless the term is modified to restrict it to one or the other. The sequence can involve, but is not limited to, preparation, separation, purification, or change in state, energy content, or composition. [**30:** A.3.3.34]

A.3.3.195 Rack. Some rack structures use solid shelves. Racks are permitted to be fixed, portable, or movable. Loading is permitted to be either manual, using lift trucks, stacker cranes, or hand placement, or automatic, using machine-controlled storage and retrieval systems. *[See Figure A.34.7.3.1(a) through Figure A.34.7.3.1(k).]*

A.3.3.195.2 Movable Racks. Movable racks can be moved back and forth only in a horizontal, two-dimensional plane. A moving aisle is created as abutting racks are either loaded or unloaded, then moved across the aisle to abut other racks.

A.3.3.195.4 Portable Racks. Portable racks can be arranged in any number of configurations.

A.3.3.196 Ramp. See 7.2.5 of NFPA *101*. [***101***: A.3.3.194]

A.3.3.200.2 Gas Room. Gas rooms must be constructed and utilized in accordance with Section 6.4 of NFPA 55. [**55:** A.3.3.32]

A.3.3.211 Smoke Barrier. A smoke barrier, such as a wall, floor, or ceiling assembly, might be aligned vertically or horizontally. A smoke barrier might or might not have a fire resistance rating. Application of smoke barrier criteria where required elsewhere in the *Code* should be in accordance with Section 12.9.

A.3.3.213 Smoke Partition. A smoke partition is not required to have a fire resistance rating. [***101***: A.3.3.225]

A.3.3.216.1 Combustible Particulate Solid. Combustible particulate solids include dusts, fibers, fines, chips, chunks, flakes, or mixtures of these. A definition of this breadth is necessary because it is crucial to address the fact that there is attrition of the material as it is conveyed. Pieces and particles rub against

each other and collide with the walls of the duct as they travel through the system. The rubbing and collision breaks down the material and produces a mixture of pieces and much finer particles, called "dusts." Consequently, it is expected that every conveying system produce dusts, regardless of the starting size of the material, as an inherent byproduct of the conveying process. [**69:** A.3.3.5]

A.3.3.216.2 Flammable Solid. Flammable solids include finely divided solid materials that, when dispersed in air as a cloud, could be ignited and cause an explosion. [*5000:* A.3.3.238]

A.3.3.220 Spray Booth. Spray booths are manufactured in a variety of forms, including automotive refinishing, downdraft, open-face, traveling, tunnel, and updraft booths. This definition is not intended to limit the term spray booth to any particular design. The entire spray booth is part of the spray area. A spray booth is not a spray room. [**33:** A.3.3.12]

A.3.3.221 Spray Room. The entire spray room is considered part of the spray area. A spray booth is not a spray room. [**33:** A.3.3.13]

A.3.3.225.6 Laced Tire Storage. See Figure A.34.8.1(g). [**13:**3.11.3]

A.3.3.225.7 Miscellaneous Tire Storage. The limitations on the type and size of storage are intended to identify those situations where tire storage is present in limited quantities and incidental to the main use of the building. Occupancies such as aircraft hangars, automobile dealers, repair garages, retail storage facilities, automotive and truck assembly plants, and mobile home assembly plants are types of facilities where miscellaneous storage could be present. [**13:** A.3.11.4]

A.3.3.227 Store. Stores are subclassified as Class A, Class B, or Class C in accordance with NFPA *101*. [**1124:** A.3.3.73]

A.3.3.228.1 Occupiable Story. Stories used exclusively for mechanical equipment rooms, elevator penthouses, and similar spaces are not occupiable stories. [*101:* A.3.3.237.1]

A.3.3.230 Street Floor. Where, due to differences in street levels, there are two or more stories accessible from the street, each is a street floor. Where there is no floor level within the specified limits for a street floor above or below ground level, the building has no street floor. [**101B:** A.3.3.102]

A.3.3.231 Structure. The term *structure* is to be understood as if followed by the words *or portion thereof. (See also A.3.3.27, Building.)* [*101:* A.3.3.240]

A.3.3.233.13 Vapor Processing System. Examples are systems using blower-assist for capturing vapors and refrigeration, absorption, and combustion systems for processing vapors. [**30:** A.3.3.45]

A.3.3.233.14 Vapor Recovery System. Examples are balanced-pressure vapor displacement systems and vacuum-assist systems without vapor processing. [**30:** A.3.3.46]

A.3.3.235.6 Stationary Tank. A stationary tank does not include a cylinder having less than 1000 lb (453.5 kg) water capacity. [**55:** A.3.3.55.2]

A.3.3.244.1 Closed System Use (Material). Examples of closed systems for solids and liquids include reaction process operations and product conveyed through a piping system into a closed vessel, system, or piece of equipment. [*5000:* A.3.3.636.1.1]

A.3.3.244.2 Open System Use (Material). Examples of open systems for solids and liquids include dispensing from or into open beakers or containers, dip tank operations, and plating tank operations. [*5000:* A.3.3.636.1.2]

A.3.3.246 Vapor Pressure. Vapor pressure is a measure of the pressure that the liquid exerts against the atmosphere above it. Just as the atmosphere exerts pressure on the surface of the liquid, the liquid pushes back. Vapor pressure is normally less than atmospheric pressure and is a measure of the liquid's tendency to evaporate (i.e., to move from the liquid to the gaseous state). This tendency is also referred to as volatility, thus the use of the term *volatile* to describe liquids that evaporate very easily. The higher the vapor pressure, the greater the rate of evaporation and the lower the boiling point. Simply put, this means more vapors and increased fire risk. [**30:** A.1.7.2.4]

A.3.3.251 Wharf. The terms *wharf* and *pier* are used interchangeably. [**307:** A.3.3.24]

A.3.4.5 Design Specification. Design specifications include both hardware and human factors, such as the conditions produced by maintenance and training. For purposes of performance-based design, the design specifications of interest are those that affect the ability of the building to meet the stated goals and objectives. [*5000:* A.3.3.580.1]

A.3.4.7 Exposure Fire. An exposure fire usually refers to a fire that starts outside a building, such as a wildlands fire or vehicle fire, and that, consequently, exposes the building to a fire. [*101:* A.3.3.75]

A.3.4.8 Fire Model. Due to the complex nature of the principles involved, models are often packaged as computer software. Any relevant input data, assumptions, and limitations needed to properly implement the model will be attached to the fire models. [*101:* A.3.3.86]

A.3.4.9 Fire Scenario. A fire scenario defines the conditions under which a proposed design is expected to meet the fire safety goals. Factors typically include fuel characteristics, ignition sources, ventilation, building characteristics, and occupant locations and characteristics. The term *fire scenario* includes more than the characteristics of the fire itself but excludes design specifications and any characteristics that do not vary from one fire to another; the latter are called assumptions. The term is used here to mean only those specifications required to calculate the fire's development and effects, but, in other contexts, the term might be used to mean both the initial specifications and the subsequent development and effects (that is, a complete description of fire from conditions prior to ignition to conditions following extinguishment). [*101:* A.3.3.90]

A.3.4.10 Fuel Load. Fuel load includes interior finish and trim. [*5000:* A.3.3.368.3]

A.3.4.14 Performance Criteria. Performance criteria are stated in engineering terms. Engineering terms include temperatures, radiant heat flux, and levels of exposure to fire products. Performance criteria provide threshold values used to evaluate a proposed design. [*101:* A.3.3.179]

A.3.4.15 Proposed Design. The design team might develop a number of trial designs that will be evaluated to determine whether they meet the performance criteria. One of the trial designs will be selected from those that meet the performance criteria for submission to the AHJ as the proposed design.

The proposed design is not necessarily limited to fire protection systems and building features. It also includes any component of the proposed design that is installed, established, or maintained for the purpose of life safety, without which the proposed design could fail to achieve specified performance criteria. Therefore, the proposed design often includes emergency procedures and organizational structures that are needed to meet the performance criteria specified for the proposed design. [*101*: A.3.3.191]

A.4.1 The overall goals of this *Code* are presented in 4.1.1. These overall goals are treated in greater depth in 4.1.3 through 4.1.5. In each of these subsections, an overall goal for the subsection is defined, specific goals relating to the overall goal are presented next, and the objectives that relate to the specific goal follow. This format is intended to enhance the usability of the *Code*.

A.4.1.1 These highest level goals are intentionally general in nature. Each includes a broad spectrum of topics as shown in 4.1.3. The property protection goal is not just a goal unto itself, as it is also achieved in part as a result of designing to achieve the other stated goals. A reasonable level of safety is further defined by subsequent language in the *Code*. The facility/property owner or an insurance representative might also have other goals, which might necessitate more stringent objectives as well as more demanding criteria.

A.4.1.2 The objectives apply regardless of which option a user of the *Code* selects for a design — the performance-based option or the prescriptive-based option. The objectives are stated in more specific terms than the goals and tend to be more quantitative. The goals and objectives, taken together, form the broad, general targets at which a performance-based design can take aim. Specific criteria for design follow in Chapter 5.

A.4.1.3 The concept of providing for safety applies not only to safety during a fire, explosion, or hazardous materials incident, but also during the normal use of a building or facility. A reasonable level of safety should be provided for occupants in and individuals near the facility or building in question. The resultant design in addition to providing for occupant's safety also promotes the public welfare. Public welfare is also provided as a result of the mission continuity provisions of this *Code*.

A.4.1.3.1.1 The term *reasonably safe* from fire is defined by subsequent language in this *Code*, primarily in the objectives.

A.4.1.3.1.2.2 In many cases, the provisions of the *Code* to provide safety for occupants satisfies this goal for protection of emergency responders.

A.4.1.3.1.2.5 This provision addresses the fire safety objectives of operations addressed elsewhere in the *Code*, such as hot work, tar kettle operation, and so forth, that are not directly related to building construction and use.

A.4.1.3.2.1 The term *reasonably safe during normal use* is defined by subsequent language in this *Code*, primarily in the objectives. Certain requirements, such as heights of guards and stair dimensions, are provided to ensure that the occupants are safe during nonemergency use of the buildings. Failure to address these features could result in falls or other injuries to occupants in their normal day-to-day activities in the building.

A.4.1.3.3.2.2 For item 3, the phrase *external force* refers to the application of factors such as heat, water, shock, or other phenomenon onto hazardous materials that are sensitive to such factors and could react vigorously to produce unsafe conditions.

A.4.1.4.2.1 Ignition occurs when combustible materials come into contact with a source of heat of sufficient temperature and power for a requisite time in an atmosphere where oxygen is present. Combustible material does not necessarily ignite immediately upon contact with a source of heat.

A.4.1.4.2.2 Examples of specific conditions to avoid include, but are not limited to, flashover, fire spread beyond the item or room of fire origin, overheating of equipment, and overpressure of exterior walls.

A.4.1.5.1 This goal is applicable to certain buildings and facilities that have been deemed to be necessary to the continued welfare of a community. Depending on the nature of the critical mission provided by the building, various stakeholders, including community leaders, AHJs, and owners will identify the mission critical buildings. Mission critical areas should be identified and appropriately protected. The objectives for property protection and mission continuity are sometimes difficult to differentiate. Achieving the objectives for property protection could, to a certain extent, accomplish the objectives for mission continuity.

A.4.1.5.2 Examples of buildings and facilities that provide a public welfare role for a community could include hospitals, police and fire stations, evacuation centers, schools, water and sewerage facilities, and electrical generating plants. Also included are buildings and facilities with significant impact on the economic viability of the community. This objective is intended to ensure that such buildings and facilities are capable of providing essential services following a disaster since the community's well-being depends on such service being available.

A.4.2.1 Additional assumptions that need to be identified for a performance-based design are addressed in Chapter 5.

A.4.2.2 It is not assumed that a design scenario will be considered that simulates the hazards produced when unauthorized releases of hazardous materials occur simultaneously at different locations within a facility, unless it is reasonable to expect that a single incident, such as a fork lift accident or pipe failure, could be expected to create such a condition. However, when hazardous materials are in close proximity to one another, such as on a shelf or in adjacent storage cabinets, it could be reasonable to apply a design scenario where multiple releases of the hazardous materials occur simultaneously from these close proximity areas. In this case, it is not unreasonable to expect the shelf to collapse or a forklift to damage adjacent hazardous materials containers.

A.4.2.3 It is not assumed that a design scenario will be considered that simulates the hazards produced when a fire, explosion, or external force that creates a dangerous condition occurs at the same time that hazardous materials have been subject to an unauthorized release. This does not preclude considering a scenario where a fire or explosion occurs and impinges on hazardous materials that are in their normal storage, use, or handling conditions.

The phrase *external force that creates a dangerous condition* refers to the application of factors such as heat, water, shock, or other phenomenon onto hazardous materials that are sensitive to such factors and could react vigorously to produce unsafe conditions.

A.4.4.4 Fire alarms alert occupants to initiate emergency procedures, facilitate orderly conduct of fire drills, and initiate response by emergency services.

A.4.5.7 Examples of changes from one occupancy subclassification to another subclassification of the same occupancy could include a change from a Class B to a Class A mercantile occupancy. Hospitals and nursing homes are both health care occupancies and are defined separately, but they are not established as separate suboccupancies; thus, a change from one to the other does not constitute a change of occupancy subclassification.

For example, a building was used as a hospital but has been closed for 4 years. It is again to be used as a hospital. As long as the building was not used as another occupancy during the time it was closed, it would be considered an existing hospital.

Hotels and apartments, although both residential occupancies, are treated separately, and a change from one to the other constitutes a change of occupancy.

A.4.5.8.3 Examples of such features include automatic sprinklers, fire alarm systems, standpipes, and portable fire extinguishers. The presence of a life safety feature, such as sprinklers or fire alarm devices, creates a reasonable expectation by the public that these safety features are functional. When systems are inoperable or taken out of service but the devices remain, they present a false sense of safety. Also, before taking any life safety features out of service, extreme care needs to be exercised to ensure that the feature is not required, was not originally provided as an alternative or equivalent, or is no longer required due to other new requirements in the current *Code*. It is not intended that the entire system or protection feature be removed. Instead, components such as sprinklers, initiating devices, notification appliances, standpipe hose, and exit systems should be removed to reduce the likelihood of relying on inoperable systems or features. [*101*:4.6.12.3]

A.5.1 The performance option of this *Code* establishes acceptable levels of risk for facilities (i.e., buildings and other structures and the operations therewith associated) as addressed in Section 1.3. (Note that "facility" and "building" can be used interchangeably; facility being the more general term.) While the performance option of this *Code* does contain goals, objectives, and performance criteria necessary to provide for an acceptable level of risk, it does not describe how to meet these goals, objectives, and performance criteria. Design and engineering are needed to meet the provisions of Chapter 5. For fire protection designs, the *SFPE Engineering Guide to Performance-Based Fire Protection Analysis and Design of Buildings* provides a framework for these assessments.

Pre-construction design requirements address those issues, which have to be considered before the certificate of occupancy is issued for a facility.

A.5.1.3 Qualifications should include experience, education, and credentials that demonstrate knowledgeable and responsible use of applicable models and methods.

A.5.1.4 The *SFPE Engineering Guide to Performance-Based Fire Protection Analysis and Design of Buildings* outlines a process for using a performance-based approach in the design and assessment of building fire safety design and identifies parameters that should be considered in the analysis of a performance-based design. As can be seen this process requires the involvement of all stakeholders who have a share or interest in the successful completion of the project. The steps that are recommended by the *SFPE Engineering Guide to Performance-Based Fire Protection Analysis and Design of Buildings* for this process are shown in Figure A.5.1.4.

The guide specifically addresses building fire safety performance-based design. It might not be directly applicable to performance-based designs involving other systems and operations covered within this *Code*, such as hot work operations or hazardous materials storage. However, the various steps for defining, developing, evaluating, and documenting the performance-based design should still provide a useful framework for the overall design process.

The steps in the performance-based design process are as follows:

(1) *Step 1: Defining Project Scope.* The first step in a performance-based design is to define the scope of the project. Defining the scope consists of identifying and documenting the following:
   (a) Constraints on the design and project schedule
   (b) The stakeholders associated with project
   (c) The proposed building construction and features desired by the owner or tenant
   (d) Occupant and building characteristics
   (e) The intended use and occupancy of the building
   (f) Applicable codes and regulations

   An understanding of these items is needed to ensure that a performance-based design meets the stakeholders' needs.

(2) *Step 2: Identifying Goals.* Once the scope of the project is defined, the next step in the performance-based design process is to identify and document the fire safety goals of various stakeholders. Fire safety goals could include levels of protection for people and property, or they could provide for continuity of operations, historical preservation, and environmental protection. Goals could be unique for different projects, based on the stakeholders needs and desires. The stakeholders should discuss which goals are the most important for the project. In order to avoid problems later in the design process, all stakeholders should be aware of and agree to the goals prior to proceeding with the performance-based design process (*see Step 7*).

(3) *Step 3: Defining Stakeholder and Design Objectives.* The third step in the design process is to develop objectives. The objectives are essentially the design goals that are further refined into tangible values that can be quantified in engineering terms. Objectives could include mitigating the consequences of a fire expressed in terms of dollar values, loss of life, or other impact on property operations, or maximum allowable conditions, such as extent of fire spread, temperature, spread of combustion products, and so forth.

(4) *Step 4: Developing Performance Criteria.* The fourth step in the design process is the development of performance criteria to be met by the design. These criteria are a further refinement of the design objectives and are numerical values to which the expected performance of the trial designs can be compared. Performance criteria could include threshold values for temperatures of materials, gas temperatures, carboxyhemoglobin (COHb) levels, smoke obscuration, and thermal exposure levels.

(5) *Step 5: Developing Design Scenarios.* Once the performance criteria have been established, the engineer will develop and analyze design alternatives to meet performance criteria. The first part of this process is the identification of possible scenarios and design scenarios. Fire scenarios are descriptions of possible fire events, and consist of fire characteristics, building characteristics (including facility operations), and occupant characteristics. The fire scenarios identified will subsequently be filtered (i.e.,

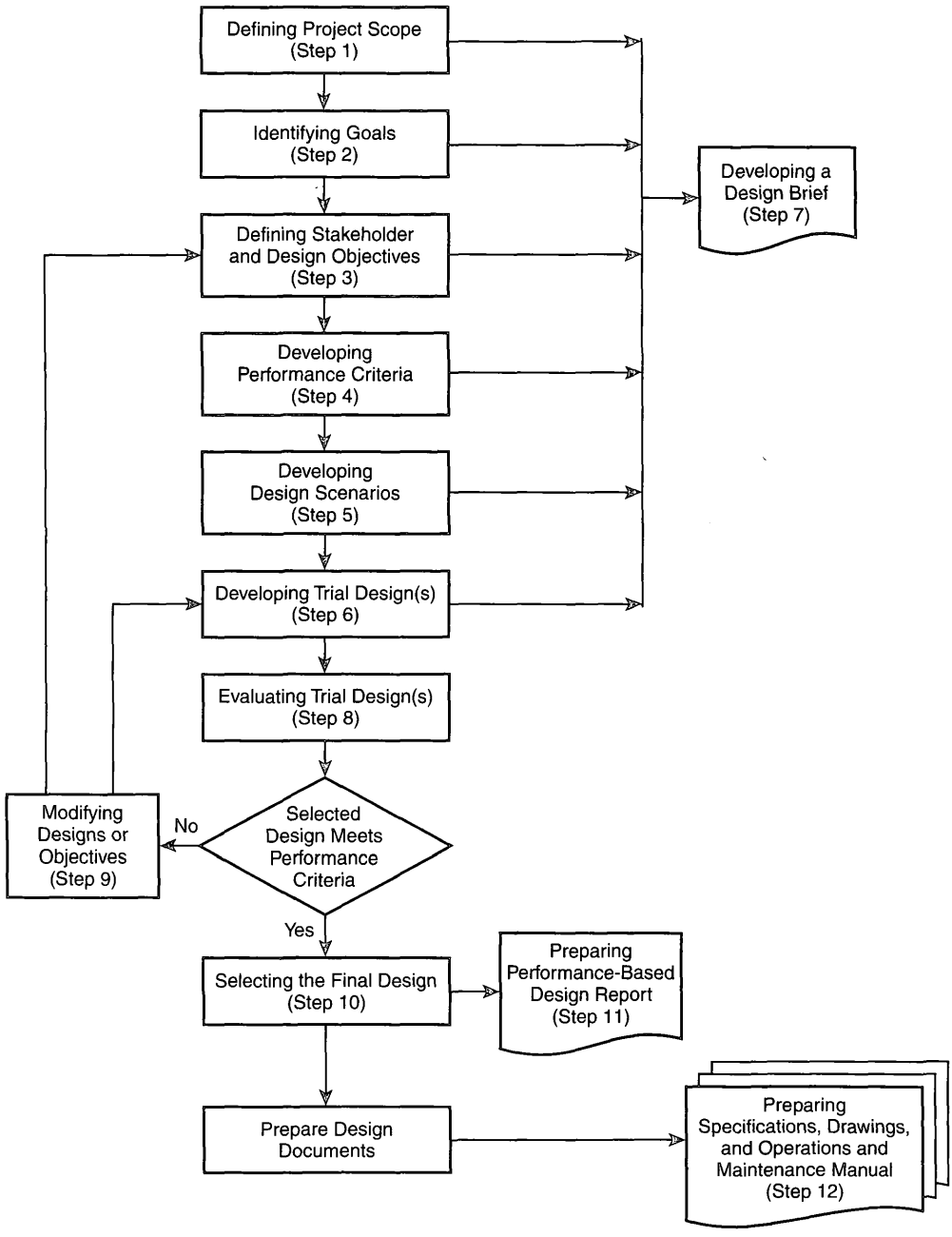

FIGURE A.5.1.4 Steps in the Performance-Based Analysis and the Conceptual Design Procedure for Fire Protection Design.

combined or eliminated) into a subset of design fire scenarios against which trial designs will be evaluated. Hazardous materials scenarios can be treated similarly.

(6) *Step 6: Developing Trial Design(s).* Once the project scope, performance criteria, and design scenarios are established, the engineer develops preliminary designs, referred to as trial designs, intended to meet the project requirements. The trial design(s) include proposed fire protection systems, construction features, and operation that are provided in order for a design to meet the performance criteria when evaluated using the design fire scenarios. The evaluation method should also be determined at this point. The evaluation methods used should be appropriate for the situation and agreeable to the stakeholders.

(7) *Step 7: Developing a Fire Protection Engineering Design Brief.* At this point in the process a fire protection engineering design brief should be prepared and provided to all stakeholders for their review and concurrence. This brief should document the project scope, goals, objectives, trial designs, performance criteria, design fire scenarios, and analysis methods. Documenting and agreeing upon these factors at this point in the design process will help avoid possible misunderstandings later.

(8) *Step 8: Evaluating Trial Designs.* Each trial design is then evaluated using each design scenario. The evaluation results will indicate whether the trial design will meet the performance criteria. Only trial design(s) that meet the performance criteria can be considered as final design proposals. Yet, the performance criteria can be revised with the stakeholders' approval. The criteria cannot be arbitrarily changed to ensure that a trial design meets a criterion, but can be changed based on additional analysis and the consideration of additional data.

(9) *Step 9: Modifying Designs or Objectives.* If none of the trial designs evaluated comply with the previously agreed upon performance criteria, it could be necessary to either develop and evaluate new trial designs, or revisit the objectives and performance criteria previously agreed upon by the stakeholders to determine if stakeholder objectives and performance criteria should be modified.

(10) *Step 10: Selecting the Final Design.* Once an acceptable trial design is identified using the evaluation, it can be considered for the final project design. If multiple trial designs are evaluated, further analysis will be needed to select a final design. The selection of an acceptable trial design for the final design could be based on a variety of factors, such as financial considerations, timeliness of installation, system and material availability, ease of installation, maintenance and use, and other factors.

(11) *Step 11: Preparing Performance-Based Design Report.* Once the final design is identified, design documents need to be prepared. Proper documentation will ensure that all stakeholders understand what is necessary for the design implementation, maintenance, and continuity of the fire protection design. The documentation should include the fire protection engineering design brief, a performance design report, detailed specifications and drawings, and a facility operations and maintenance manual.

(12) *Step 12: Preparing Specifications, Drawings, and Operations and Maintenance Manual.* The specifications and drawings portion of the performance-based design report convey to building and system designers and installing contractors how to implement the performance design. Specifications and drawings could include required sprinkler densities, hydraulic characteristics and spacing requirements, the fire detection and alarm system components and programming, special construction requirements including means of egress and location of fire-resistive walls, compartmentation, and the coordination of interactive systems. The detailed specifications are the implementation document of the performance-based design report. The detailed drawings will graphically represent the results of the performance design. The Operations and Maintenance (O&M) Manual clearly states the requirement of the facility operator to ensure that the components of the performance design are in place and operating properly. The O&M Manual describes the commissioning requirements and the interaction of the different systems' interfaces. All subsystems are identified, and inspection and testing regimes and schedules are created.

The O&M Manual also gives instruction to the facility operator on restrictions placed on facility operations. These limitations are based on the engineering assumptions made during the design and analysis. These limiting factors could include critical fire load, sprinkler design requirements, building use and occupancy, and reliability and maintenance of systems. The O&M Manual can be used to communicate to tenants and occupants these limits and their responsibilities as a tenant. It could also be used as a guide for renovations and changes. It also can be used to document agreements between stakeholders.

A.5.1.5 A third-party reviewer is a person or group of persons chosen by the AHJ to review proposed performance-based designs. Qualifications of the third-party reviewer should include experience, education, and credentials that demonstrate knowledgeable and responsible use of applicable models and methods.

A.5.1.8 See Step 12 of A.5.1.4 for a description of these documents.

A.5.1.9 Information that could be needed by the fire service arriving at the scene of a fire in a performance-based designed facility includes, but is not limited to, the following:

(1) Safe shutdown procedures of equipment and processes
(2) Facility personnel responsible for assisting the fire service
(3) Operating procedures required to maintain the effectiveness of the performance-based designed fire protection system: when it is and is not appropriate to alter, shut down, or turn off a design feature; assumptions that have to be maintained if a fire occurs; suggested fire-fighting tactics that relate to the specific nature of the performance-based design.

The design specifications and O&M Manual documentation described in 5.1.8 should provide a guide for the facility owner and tenants to follow in order to maintain the required level of safety anticipated by the original design. It should also provide a guide for the AHJ to use in conducting ongoing inspections of the facility.

A.5.1.10 Continued compliance with the goals and objectives of the *Code* involves many factors. The building construction, including openings, interior finish, and fire- and smoke-resistive construction, and the building and fire protection systems need to retain at least the same level of performance as is provided for by the original design parameters. The use and occupancy should not change to the degree that assumptions made about the occupant characteristics, combustibility of furnishings, and existence of trained personnel are no longer valid. In addition, actions provided by other personnel, such as emergency responders, should not be diminished below the documented assumed levels. Also, actions needed to maintain reliability of systems at the anticipated level need to meet the initial design criteria.

Subsection 5.1.10 deals with issues that arise after the facility has been constructed and a certificate of occupancy has been issued. Therefore, any changes to the facility or the operations conducted therein, up to and including the demolition of the facility that affect the assumptions of the original design are considered as part of the management of change.

The following is a process for evaluating performance-based facilities:

(1) Review of original design analysis and documentation as follows:
   (a) Assumptions
   (b) Input parameter values
   (c) Predictions and/or results of other calculations
(2) Review of design analysis and documentation for any subsequent renovations, additions, modifications, and so forth, as in Step 1 of A.5.1.4

(3) Review of the facility's operations and maintenance manual, including any and all revisions to it
(4) On-site inspection, involving the following:
  (a) Consideration of "prescriptive" issues (e.g., blocked egress paths, poor maintenance of systems)
  (b) Comparison of assumptions to specific, pertinent on-site conditions
  (c) Comparison of input parameter values to pertinent on-site conditions
  (d) Review of maintenance and testing documentation to ensure adherence to the schedules detailed in the facility's O&M Manual
(5) Reconciliation of discrepancies as follows:
  (a) Develop a list of discrepancies
  (b) Consultation with the facility owner and/or their representative
  (c) Preparation of a schedule that reconciles the discrepancies

A.5.1.11 Private fire inspection services can be used to meet this provision provided that they are qualified to assess the impact of changes on the performance-based design and assumptions.

A.5.2.2 The performance criteria in 5.2.2 define an acceptable level of performance that should be agreed upon by the stakeholders, including the owner and the AHJ. The acceptable level of performance can vary widely between different facilities based on a number of factors, including the existence of potential ignition sources, potential fuel loads present, reactivity and quantity of hazardous materials present, the nature of the operations conducted at the facility, and the characteristics and number of personnel likely to be present at the facility.

A.5.2.2.1 Many of the performance criteria related to safety from fire can also be found in the annex of NFPA *101, Life Safety Code.*

A.5.2.2.2 It is anticipated that the design provides protection for occupants who are not intimate with the initial unintentional detonation or deflagration of explosive materials, and individuals immediately adjacent to the property. It is recognized that employees should be trained and knowledgeable in the hazards of the materials present in the workplace. It is recognized that some of these individuals could experience psychological and physical injuries, such as hearing problems, on either a short or long term basis. However, the intent is that they do not experience thermal burns or loss of life or limb as a direct result of the explosion.

It is not the intent of the *Code* to provide protection against explosions caused by acts of terrorism. This would involve the introduction of an unknown quantity of explosives in an unknown location within or adjacent to a building. Where protection is needed against such acts of terrorism, the appropriate military and law enforcement agencies should be consulted.

A.5.2.2.3 Given the nature and variety of hazardous materials, more than one performance criterion for a specific facility could need to be developed. Criteria have to be developed for each hazardous material and possibly for different personnel; for example, higher levels of exposure can be tolerated by personnel that are in some way protected than those personnel having no protection. Development of performance criteria for hazardous materials should be developed by the facility owner and the facility's safety personnel in conjunction with the AHJ and the emergency response personnel expected to respond to an incident.

It is anticipated that the design provides protection for occupants inside or immediately adjacent to the facility who are not intimate with the initial unauthorized release of hazardous materials, or the initial unintentional reaction of hazardous materials. However, it is assumed that these individuals depart from the area of the incident in a time frame reasonable for their circumstances, based on their observation of the event, or some other form of notification.

It is also anticipated that employees and emergency response personnel are trained and aware of the hazardous materials present in the facility, and the potential consequences of their involvement in the incident, and take appropriate measures to ensure their own safety during search and rescue operations.

It is not the intent of the *Code* to provide protection against acts of terrorism involving the introduction of hazardous materials into a facility. This involves the introduction of an unknown quantity of materials in an unknown location within or adjacent to a building. Where protection is needed against such acts of terrorism, the appropriate military and law enforcement agencies should be consulted.

A.5.2.2.4 Each facility designed using a performance-based approach most likely has different levels of acceptable and unacceptable property damage. This reflects the unique aspects of the performance-based designed facility and the reasons for pursuing a performance-based design. Therefore, the definition of an acceptable and an unacceptable level of property damage results from discussions between the facility's owner, manager and engineer, the designer, (possibly) the insurance underwriter and field engineer, and the AHJ. There could be cases where a property damage criterion is not needed.

Note that the structural integrity performance criteria for property damage most likely differs from the structural integrity performance criteria for life safety. This reflects the difference in the associated objectives: a life safety criterion probably is more restrictive than one for property damage.

A.5.2.2.5 Each facility designed using a performance-based approach most likely has a different level of acceptable and unacceptable interruption of the facility's mission. This reflects the unique aspects of the performance-based designed facility and the reasons for pursuing a performance-based design. Therefore, the definition of an acceptable and an unacceptable interruption of the facility's mission results from discussions between the facility's owner, manager and engineer, the designer, (possibly) the insurance underwriter and field engineer, and the AHJ. There could be cases where a mission continuity criterion is not needed.

A.5.4 Many events can occur during the life of a facility; some have a higher probability of occurrence than others. Some events, though not typical, could have a devastating effect on the facility. A reasonable design should be able to achieve the goals, objectives, and performance criteria of this *Code* for any typical or common design scenario and for some of the non-typical, potentially devastating scenarios, up to some level commensurate with society's expectations as reflected in this *Code.*

The challenge in selecting design scenarios is finding a manageable number that are sufficiently diverse and representative so that, if the design is reasonably safe for those scenarios, it should then be reasonably safe for all scenarios,

except for those specifically excluded as being unrealistically severe or sufficiently infrequent to be fair tests of the design.

A.5.4.1.2 The *SFPE Engineering Guide to Performance-Based Fire Protection Analysis and Design of Buildings* identifies methods for evaluating fire scenarios.

A.5.4.1.3 It is desirable to consider a wide variety of different design scenarios to evaluate the complete capabilities of the building or structure. Design scenarios should not be limited to a single or a couple of worst-case events.

A.5.4.2.1 An example of such a scenario for a health care occupancy involves a patient room with two occupied beds with a fire initially involving one bed and the room door open. This is a cursory example in that much of the explicitly required information indicated in 5.4.2.1 can be determined from the information provided in the example. Note that it is usually necessary to consider more than one scenario to capture the features and conditions typical of an occupancy.

A.5.4.2.2 Examples of such scenarios are a fire involving ignition of gasoline as an accelerant in a means of egress, clothing racks in corridors, renovation materials, or other fuel configurations that can cause an ultrafast fire. The means of egress chosen is the doorway with the largest egress capacity among doorways normally used in the ordinary operation of the building. The baseline occupant characteristics for the property are assumed. At ignition, doors are assumed to be open throughout the building.

A.5.4.2.3 An example of such a scenario is a fire in a storage room adjacent to the largest occupiable room in the building. The contents of the room of fire origin are specified to provide the largest fuel load and the most rapid growth in fire severity consistent with the normal use of the room. The adjacent occupiable room is assumed to be filled to capacity with occupants. Occupants are assumed to be somewhat impaired in whatever form is most consistent with the intended use of the building. At ignition, doors from both rooms are assumed to be open. Depending on the design, doorways connect the two rooms or they connect via a common hallway or corridor.

For purposes of this scenario, an occupiable room is a room that could contain people (i.e., a location within a building where people are typically found).

A.5.4.2.4 An example of such a scenario is a fire originating in a concealed wall- or ceiling-space adjacent to a large, occupied function room. Ignition involves concealed combustibles, including wire or cable insulation and thermal or acoustical insulation. The adjacent function room is assumed to be occupied to capacity. The baseline occupant characteristics for the property are assumed. At ignition, doors are assumed to be open throughout the building.

A.5.4.2.5 An example of such a scenario is a cigarette fire in a trash can. The trash can is close enough to room contents to ignite more substantial fuel sources but is not close enough to any occupant to create an intimate-with-ignition situation. If the intended use of the property involves the potential for some occupants to be incapable of movement at any time, then the room of origin is chosen as the type of room likely to have such occupants, filled to capacity with occupants in that condition. If the intended use of the property does not involve the potential for some occupants to be incapable of movement, then the room of origin is chosen to be an assembly or function area characteristic of the use of the property, and the trash can is placed so that it is shielded by furniture from suppression systems. At ignition, doors are assumed to be open throughout the building.

A.5.4.2.6 An example of such a scenario is a fire originating in the largest fuel load of combustibles possible in normal operation in a function or assembly room or in a process/manufacturing area, characteristic of the normal operation of the property. The configuration, type, and geometry of the combustibles are chosen so as to produce the most rapid and severe fire growth or smoke generation consistent with the normal operation of the property. The baseline occupant characteristics for the property are assumed. At ignition, doors are assumed to be closed throughout the building.

This scenario includes everything from a big couch fire in a small dwelling to a rack storage fire in combustible liquids stock in a big box retail store.

A.5.4.2.7 An example of such a scenario is an exposure fire. The initiating fire is the closest and most severe fire possible consistent with the placement and type of adjacent properties and the placement of plants and combustible adornments on the property. The baseline occupant characteristics of the property are assumed.

This category includes wildland/urban interface fires and exterior wood shingle problems, where applicable.

A.5.4.2.8 This scenario addresses a set of conditions with a typical fire originating in the building with any one passive or active fire protection system or feature being ineffective. Examples include unprotected openings between floors or between fire walls or fire barrier walls, rated fire doors that fail to close automatically or are blocked open, sprinkler system water supply that is shut off, fire alarm system that's nonoperative, smoke management system that is not operational, or automatic smoke dampers that are blocked open. This scenario should represent a reasonable challenge to the other building features provided by the design and presumed to be available.

The exemption from Fire Design Scenario 8 is applied to each active or passive fire protection system individually and requires two different types of information to be developed by analysis and approved by the AHJ. System reliability is to be analyzed and accepted. Design performance in the absence of the system is also to be analyzed and accepted, but acceptable performance does not require fully meeting the stated goals and objectives. It might not be possible to meet fully the goals and objectives if a key system is unavailable, and yet no system is totally reliable. The AHJ determines which level of performance, possibly short of the stated goals and objectives, is acceptable, given the very low probability (that is, the system's unreliability probability) that the system will not be available.

A.5.4.3.1 This scenario is intended to address facilities where explosives, and products containing explosives, are manufactured, stored, sold, or handled. From an overall safety standpoint, the operations being performed at these facilities should include stringent safety procedures that significantly reduce the likelihood of an explosion from occurring. However, if an explosion does occur, protection methods such as storage magazines, property set backs, deflagration, and explosion venting and containment need to be in place, as appropriate, to minimize potential injury and loss of life and property.

Where products containing explosives, such as pyrotechnic displays or fireworks, are stored, handled, or used in buildings,

such as arenas, an explosion scenario should not result in significant injuries to occupants not intimate with the materials.

A.5.4.4 Design hazardous materials scenarios should explicitly account for the following:

(1) Occupant activities, training, and knowledge
(2) Number and location of occupants
(3) Discharge location and surroundings
(4) Hazardous materials' properties
(5) Ventilation, inerting, and dilution systems and conditions
(6) Normal and emergency operating procedures
(7) Safe shutdown and other hazard mitigating systems and procedures
(8) Weather conditions affecting the hazard
(9) Potential exposure to off-site personnel

Design hazardous materials scenarios should be evaluated as many times as necessary by varying the factors previously indicated. Design hazardous materials scenarios could need to be established for each different type of hazardous material stored or used at the facility.

A.5.4.4.4.2 This provision should be applied to each protection system individually and requires two different types of information to be developed by analysis and approved by the AHJ. System reliability is to be analyzed and accepted. Design performance in the absence of the system is also to be analyzed and accepted, but acceptable performance does not require fully meeting the stated goals and objectives. It might not be possible to meet fully the goals and objectives if a key system is unavailable, and yet no system is totally reliable. The AHJ determines which level of performance, possibly short of stated goals and objectives, is acceptable, given the very low probability (that is, the systems' unreliability probability) that the system will be unavailable.

A.5.4.5.1 An example of such a scenario would involve a fire or earthquake effectively blocking the principal entrance/exit but not immediately endangering the occupants. The full occupant load of the assembly space has to exit using secondary means.

A.5.6 The assessment of precision required in 5.7.2 requires a sensitivity and uncertainty analysis, which can be translated into safety factors.

Sensitivity Analysis. The first run a model user makes should be labeled as the base case, using the nominal values of the various input parameters. However, the model user should not rely on a single run as the basis for any performance-based fire safety system design. Ideally, each variable or parameter that the model user made to develop the nominal input data should have multiple runs associated with it, as should combinations of key variables and parameters. Thus, a sensitivity analysis should be conducted that provides the model user with data that indicates how the effects of a real fire could vary and how the response of the proposed fire safety design could also vary.

The interpretation of a model's predictions can be a difficult exercise if the model user does not have knowledge of fire dynamics or human behavior.

Reasonableness Check. The model user should first try to determine whether the predictions actually make sense, that is, they don't upset intuition or preconceived expectations. Most likely, if the results don't pass this test, an input error has been committed.

Sometimes the predictions appear to be reasonable but are, in fact, incorrect. For example, a model can predict higher temperatures farther from the fire than close to it. The values themselves could be reasonable, for example, they are not hotter than the fire, but they don't "flow" down the energy as expected.

A margin of safety can be developed using the results of the sensitivity analysis in conjunction with the performance criteria to provide the possible range of time during which a condition is estimated to occur.

Safety factors and margin of safety are two concepts used to quantify the amount of uncertainty in engineering analyses. Safety factors are used to provide a margin of safety and represent, or address, the gap in knowledge between the theoretically perfect model, that is, reality and the engineering models that can only partially represent reality.

Safety factors can be applied to either the predicted level of a physical condition or to the time at which the condition is predicted to occur. Thus, a physical or a temporal safety factor, or both, can be applied to any predicted condition. A predicted condition (that is, a parameter's value) and the time at which it occurs are best represented as distributions. Ideally, a computer fire model predicts the expected or nominal value of the distribution. Safety factors are intended to represent the spread of these distributions.

Given the uncertainty associated with data acquisition and reduction, and the limitations of computer modeling, any condition predicted by a computer model can be thought of as an expected or nominal value within a broader range. For example, an upper layer temperature of 1110°F (600°C) is predicted at a given time. If the modeled scenario is then tested (that is, full-scale experiment based on the computer model's input data), the actual temperature at that given time could be 1185°F or 1085°F (640°C or 585°C). Therefore, the temperature should be reported as 1110°F + 75°F, –25°F (600°C + 40°C, –15°C) or as a range of 1085°F to 1184°F (585°C to 640°C).

Ideally, predictions are reported as a nominal value, a percentage, or an absolute value. As an example, an upper layer temperature prediction could be reported as 1112°F (600°C), 86°F (30°C) or 1112°F (600°C), 5 percent. In this case, the physical safety factor is 0.05 (that is, the amount by which the nominal value should be degraded and enhanced). Given the state-of-the-art of computer fire modeling, this is a very low safety factor. Physical safety factors tend to be on the order of tens of percent. A safety factor of 50 percent is not unheard of.

Part of the problem in establishing safety factors is that it is difficult to state the percentage or range that is appropriate. These values can be obtained when the computer model predictions are compared to test data. However, using computer fire models in a design mode does not facilitate this since (1) the room being analyzed has not been built yet and (2) test scenarios do not necessarily depict the intended design.

A sensitivity analysis should be performed based on the assumptions that affect the condition of interest. A base case that uses all nominal values for input parameters should be developed. The input parameters should be varied over reasonable ranges, and the variation in predicted output should be noted. This output variation can then become the basis for physical safety factors.

The temporal safety factor addresses the issue of when a condition is predicted and is a function of the rate at which processes are expected to occur. If a condition is predicted to occur 2 minutes after the start of the fire, then this can be used as a nominal value. A process similar to that described for physical safety factors can also be employed to develop

temporal safety factors. In this case, however, the rates (for example, of heat release and toxic product generation) will be varied instead of absolute values (for example, material properties).

The margin of safety can be thought of as a reflection of societal values and can be imposed by the AHJ for that purpose. Since the time for which a condition is predicted is most likely the focus of the AHJ (for example, the model predicts occupants have 5 minutes to safely evacuate), the margin of safety is characterized by temporal aspects and tacitly applied to the physical margin of safety.

Escaping the harmful effects of fire (or mitigating them) is, effectively, a race against time. When assessing fire safety system designs based on computer model predictions, the choice of an acceptable time is important. When an AHJ is faced with the predicted time of untenability, a decision needs to be made regarding whether sufficient time is available to ensure the safety of facility occupants. The AHJ is assessing the margin of safety. Is there sufficient time to get everyone out safely? If the AHJ feels that the predicted egress time is too close to the time of untenability, then the AHJ can impose an additional time that the designer has to incorporate into the system design. In other words, the AHJ can impose a greater margin of safety than that originally proposed by the designer.

A.5.7.1 The *SFPE Engineering Guide to Performance-Based Fire Protection Analysis and Design of Buildings* describes the documentation that should be provided for a performance-based design.

Proper documentation of a performance design is critical to the design acceptance and construction. Proper documentation also ensures that all parties involved understand what is necessary for the design implementation, maintenance, and continuity of the fire protection design. If attention to details is maintained in the documentation, then there should be little dispute during approval, construction, start-up, and use.

Poor documentation could result in rejection of an otherwise good design, poor implementation of the design, inadequate system maintenance and reliability, and an incomplete record for future changes or for testing the design forensically.

A.5.7.2 The sources, methodologies, and data used in performance-based designs should be based on technical references that are widely accepted and used by the appropriate professions and professional groups. This acceptance is often based on documents that are developed, reviewed, and validated under one of the following processes:

(1) Standards developed under an open consensus process conducted by recognized professional societies, codes or standards organizations, or governmental bodies
(2) Technical references that are subject to a peer review process and published in widely recognized peer-reviewed journals, conference reports, or other publications
(3) Resource publications such as the *SFPE Handbook of Fire Protection Engineering*, which are widely recognized technical sources of information

The following factors are helpful in determining the acceptability of the individual method or source:

(1) Extent of general acceptance in the relevant professional community. Indications of this acceptance include peer-reviewed publication, widespread citation in the technical literature, and adoption by or within a consensus document.
(2) Extent of documentation of the method, including the analytical method itself, assumptions, scope, limitations, data sources, and data reduction methods.
(3) Extent of validation and analysis of uncertainties. This includes comparison of the overall method with experimental data to estimate error rates as well as analysis of the uncertainties of input data, uncertainties and limitations in the analytical method, and uncertainties in the associated performance criteria.
(4) Extent to which the method is based on sound scientific principles.
(5) Extent to which the proposed application is within the stated scope and limitations of the supporting information, including the range of applicability for which there is documented validation. Factors such as spatial dimensions, occupant characteristics, and ambient conditions can limit valid applications.

In many cases, a method is built from and includes numerous component analyses. These component analyses should be evaluated using the same factors that are applied to the overall method as outlined in items (1) through (5).

A method to address a specific fire safety issue, within documented limitations or validation regimes, might not exist. In such a case, sources and calculation methods can be used outside of their limitations, provided that the design team recognizes the limitations and addresses the resulting implications.

The technical references and methodologies to be used in a performance-based design should be closely evaluated by the design team and the AHJ, and possibly by a third-party reviewer. The strength of the technical justification should be judged using criteria in items (1) through (5). This justification can be strengthened by the presence of data obtained from fire testing.

A.5.7.11 Documentation for modeling should conform to ASTM E 1472, *Standard Guide for Documenting Computer Software for Fire Models*, although most, if not all, models were originally developed before this standard was promulgated.

A.6.1.2.1 Assembly Occupancy. Assembly occupancies might include the following:

(1) Armories
(2) Assembly halls
(3) Auditoriums
(4) Bowling lanes
(5) Club rooms
(6) College and university classrooms, 50 persons and over
(7) Conference rooms
(8) Courtrooms
(9) Dance halls
(10) Drinking establishments
(11) Exhibition halls
(12) Gymnasiums
(13) Libraries
(14) Mortuary chapels
(15) Motion picture theaters
(16) Museums
(17) Passenger stations and terminals of air, surface, underground, and marine public transportation facilities
(18) Places of religious worship
(19) Pool rooms
(20) Recreation piers
(21) Restaurants
(22) Skating rinks
(23) Special amusement buildings, regardless of occupant load
(24) Theaters

Assembly occupancies are characterized by the presence or potential presence of crowds with attendant panic hazard in case of fire or other emergency. They are generally or occasionally open to the public, and the occupants, who are present voluntarily, are not ordinarily subject to discipline or control. Such buildings are ordinarily occupied by able-bodied persons and are not used for sleeping purposes. Special conference rooms, snack areas, and other areas incidental to, and under the control of, the management of other occupancies, such as offices, fall under the 50-person limitation.

Restaurants and drinking establishments with an occupant load of fewer than 50 persons should be classified as mercantile occupancies.

For special amusement buildings, see 12.4.7 and 13.4.7 of NFPA *101, Life Safety Code.* [***101:*** A.6.1.2.1]

A.6.1.3.1 Educational Occupancy. Educational occupancies include the following:

(1) Academies
(2) Kindergartens
(3) Schools

An educational occupancy is distinguished from an assembly occupancy in that the same occupants are regularly present. [***101:*** A.6.1.3.1]

A.6.1.4.1 Day-Care Occupancy. Day-care occupancies include the following:

(1) Adult day-care occupancies, except where part of a health care occupancy
(2) Child day-care occupancies
(3) Day-care homes
(4) Kindergarten classes that are incidental to a child day-care occupancy
(5) Nursery schools

In areas where public schools offer only half-day kindergarten programs, many child day-care occupancies offer state-approved kindergarten classes for children who need full-day care. Because these classes are normally incidental to the day-care occupancy, the requirements of the day-care occupancy should be followed. [***101:*** A.6.1.4.1]

A.6.1.5.1 Health Care Occupancy. Health care occupancies include the following:

(1) Hospitals
(2) Limited care facilities
(3) Nursing homes

Occupants of health care occupancies typically have physical or mental illness, disease, or infirmity. They also include infants, convalescents, or infirm aged persons. [***101:*** A.6.1.5.1]

A.6.1.6.1 Ambulatory Health Care Occupancy. It is not the intent that occupants be considered to be incapable of self-preservation just because they are in a wheelchair or use assistive walking devices, such as a cane, a walker, or crutches. Rather, it is the intent to address emergency care centers that receive patients who have been rendered incapable of self-preservation due to the emergency, such as being rendered unconscious as a result of an accident or being unable to move due to sudden illness. [***101:*** A.6.1.6.1]

A.6.1.7.1 Detention and Correctional Occupancy. Detention and correctional occupancies include the following:

(1) Adult and juvenile substance abuse centers
(2) Adult and juvenile work camps
(3) Adult community residential centers
(4) Adult correctional institutions
(5) Adult local detention facilities
(6) Juvenile community residential centers
(7) Juvenile detention facilities
(8) Juvenile training schools

See A.22.1.1.1.4 and A.23.1.1.1.4 of NFPA *101.* [***101:*** A.6.1.7.1]

A.6.1.7.2 Chapters 22 and 23 of NFPA *101* address the residential housing areas of the detention and correctional occupancy as defined in 3.3.165.8 of NFPA *101.* Examples of uses, other than residential housing, include gymnasiums or industries. [***101:*** A.6.1.7.2]

A.6.1.8.1.1 One- and Two-Family Dwelling Unit. The application statement of 24.1.1.1 of NFPA *101* limits each dwelling unit to being "occupied by members of a single family with not more than three outsiders." This *Code* and NFPA *101* does not define the term *family.* The definition of family is subject to federal, state, and local regulations and might not be restricted to a person or a couple (two people) and their children. The following examples aid in differentiating between a single-family dwelling and a lodging or rooming house:

(1) An individual or a couple (two people) who rent a house from a landlord and then sublease space for up to three individuals should be considered a family renting to a maximum of three outsiders, and the house should be regulated as a single-family dwelling in accordance with Chapter 24 of NFPA *101.*
(2) A house rented from a landlord by an individual or a couple (two people) in which space is subleased to four or more individuals, but not more than 16, should be considered and regulated as a lodging or rooming house in accordance with Chapter 26 of NFPA *101.*
(3) A residential building that is occupied by four or more individuals, but not more than 16, each renting from a landlord, without separate cooking facilities, should be considered and regulated as a lodging or rooming house in accordance with Chapter 26 of NFPA *101.* [***101:*** A.6.1.8.1.1]

A.6.1.8.1.3 Hotel. So-called apartment hotels should be classified as hotels, because they are potentially subject to the same transient occupancy as hotels. Transients are those who occupy accommodations for less than 30 days. [***101:*** A.6.1.8.1.3]

A.6.1.8.1.4 Dormitory. Rooms within dormitories intended for the use of individuals for combined living and sleeping purposes are guest rooms or guest suites. Examples of dormitories include college dormitories, fraternity and sorority houses, and military barracks. [***101:*** A.6.1.8.1.4]

A.6.1.9.1 Residential Board and Care Occupancy. The following are examples of facilities classified as residential board and care occupancies:

(1) Group housing arrangement for physically or mentally handicapped persons who normally attend school in the community, attend worship in the community, or otherwise use community facilities
(2) Group housing arrangement for physically or mentally handicapped persons who are undergoing training in preparation for independent living, for paid employment, or for other normal community activities
(3) Group housing arrangement for the elderly that provides personal care services but that does not provide nursing care

(4) Facilities for social rehabilitation, alcoholism, drug abuse, or mental health problems that contain a group housing arrangement and that provide personal care services but do not provide acute care
(5) Assisted living facilities
(6) Other group housing arrangements that provide personal care services but not nursing care [*101:* A.6.1.9.1]

A.6.1.10.1 Mercantile Occupancy. Mercantile occupancies include the following:

(1) Auction rooms
(2) Department stores
(3) Drugstores
(4) Restaurants with fewer than 50 persons
(5) Shopping centers
(6) Supermarkets

Office, storage, and service facilities incidental to the sale of merchandise and located in the same building should be considered part of the mercantile occupancy classification. [*101:* A.6.1.10.1]

A.6.1.11.1 Business Occupancy. Business occupancies include the following:

(1) Air traffic control towers (ATCTs)
(2) City halls
(3) College and university instructional buildings, classrooms under 50 persons, and instructional laboratories
(4) Courthouses
(5) Dentists' offices
(6) Doctors' offices
(7) General offices
(8) Outpatient clinics (ambulatory)
(9) Town halls

Doctors' and dentists' offices are included, unless of such character as to be classified as ambulatory health care occupancies. *(See 3.3.165.1 of NFPA 101.)*

Birth centers should be classified as business occupancies if they are occupied by fewer than four patients, not including infants, at any one time; do not provide sleeping facilities for four or more occupants; and do not provide treatment procedures that render four or more patients, not including infants, incapable of self-preservation at any one time. For birth centers occupied by patients not meeting these parameters, see Chapter 18 or Chapter 19 of NFPA *101*, as appropriate.

Service facilities common to city office buildings, such as newsstands, lunch counters serving fewer than 50 persons, barber shops, and beauty parlors are included in the business occupancy group.

City halls, town halls, and courthouses are included in this occupancy group, insofar as their principal function is the transaction of public business and the keeping of books and records. Insofar as they are used for assembly purposes, they are classified as assembly occupancies. [*101:* A.6.1.11.1]

A.6.1.12.1 Industrial Occupancy. Industrial occupancies include the following:

(1) Drycleaning plants
(2) Factories of all kinds
(3) Food processing plants
(4) Gas plants
(5) Hangars (for servicing/maintenance)
(6) Laundries
(7) Power plants
(8) Pumping stations
(9) Refineries
(10) Sawmills
(11) Telephone exchanges

In evaluating the appropriate classification of laboratories, the AHJ should treat each case individually, based on the extent and nature of the associated hazards. Some laboratories are classified as occupancies other than industrial; for example, a physical therapy laboratory or a computer laboratory. [*101:* A.6.1.12.1]

A.6.1.13.1 Storage Occupancy. Storage occupancies include the following:

(1) Barns
(2) Bulk oil storage
(3) Cold storage
(4) Freight terminals
(5) Grain elevators
(6) Hangars (for storage only)
(7) Parking structures
(8) Stables
(9) Truck and marine terminals
(10) Warehouses

Storage occupancies are characterized by the presence of relatively small numbers of persons in proportion to the area. [*101:* A.6.1.13.1]

A.6.1.14.1.3 Examples of uses that might be incidental to another occupancy include the following:

(1) Newsstand (mercantile) in an office building
(2) Giftshop (mercantile) in a hotel
(3) Small storage area (storage) in any occupancy
(4) Minor office space (business) in any occupancy
(5) Maintenance area (industrial) in any occupancy [*101:* A.6.1.14.1.3]

A.6.1.14.1.3(2) Examples of uses that have occupant loads below the occupancy classification threshold levels include the following:

(1) Assembly use with fewer than 50 persons within a business occupancy
(2) Educational use with fewer than 6 persons within an apartment building. [*101:* A.6.1.14.1.3(2)]

A.10.1.2 It is the intent of this *Code* that all existing buildings comply with the referenced edition of NFPA *101, Life Safety Code.*

A.10.3.3 The AHJ should take into account the maintenance of required means of egress and fire protection systems during the construction, repair, alteration, or addition to the building. If necessary, alternative protection features can be required to ensure that no imminent hazards exist as the result of modifications.

A.10.4.3 Examples of such features include automatic sprinklers, fire alarm systems, standpipes, and portable fire extinguishers. The presence of a life safety feature, such as sprinklers or fire alarm devices, creates a reasonable expectation by the public that these safety features are functional. When systems are inoperable or taken out of service but the devices remain, they present a false sense of safety. Also, before taking any life safety features out of service, extreme care needs to be exercised to ensure that the feature is not required, was not originally provided as an alternative or equivalency, or is no longer required due to other new requirements in the current *Code.* It is not intended that the entire system or protection

feature be removed. Instead, components such as sprinklers, initiating devices, notification appliances, standpipe hose, and exit systems should be removed to reduce the likelihood of relying on inoperable systems or features. [*101*: A.4.6.12.3]

A.10.5.2 Premises are deemed to be overcrowded when the occupant load exceeds the exit capacity or the posted occupant load.

A.10.6 The purpose of emergency egress and relocation drills is to educate the participants in the fire safety features of the building, the egress facilities available, and the procedures to be followed. Speed in emptying buildings or relocating occupants, while desirable, is not the only objective. Prior to an evaluation of the performance of an emergency egress and relocation drill, an opportunity for instruction and practice should be provided. This educational opportunity should be presented in a nonthreatening manner, with consideration to the prior knowledge, age, and ability of audience.

The usefulness of an emergency egress and relocation drill, and the extent to which it can be performed, depends on the character of the occupancy.

In buildings where the occupant load is of a changing character, such as hotels or department stores, no regularly organized emergency egress and relocation drill is possible. In such cases, the emergency egress and relocation drills are to be limited to the regular employees, who can be thoroughly schooled in the proper procedure and can be trained to properly direct other occupants of the building in case of emergency evacuation or relocation. In occupancies such as hospitals, regular employees can be rehearsed in the proper procedure in case of fire; such training always is advisable in all occupancies, regardless of whether regular emergency egress and relocation drills can be held. [*101*: A.4.7]

A.10.6.2 If an emergency egress and relocation drill is considered merely as a routine exercise from which some persons are allowed to be excused, there is a grave danger that, in an actual emergency, the evacuation and relocation will not be successful. However, there might be circumstances under which all occupants do not participate in an emergency egress and relocation drill, for example, infirm or bedridden patients in a health care occupancy. [*101*: A.4.7.2]

A.10.6.5 Fire is always unexpected. If the drill is always held in the same way at the same time, it loses much of its value. When, for some reason during an actual fire, it is not possible to follow the usual routine of the emergency egress and relocation drill to which occupants have become accustomed, confusion and panic might ensue. Drills should be carefully planned to simulate actual fire conditions. Not only should drills be held at varying times, but different means of exit or relocation areas should be used, based on an assumption that fire or smoke might prevent the use of normal egress and relocation avenues. [*101*: A.4.7.4]

A.10.6.7 The written record required by this paragraph should include such details as the date, time, participants, location, and results of that drill. [*101*: A.4.7.6]

A.10.7.1.3 This requirement should not be construed to forbid the owner, manager, or other person in control of the aforementioned building or premises from using all diligence necessary to extinguish such fire prior to the arrival of the fire department.

A.10.9.2 Emergency plans should include any of the following items based on the type of occupancy and hazards involved:

(1) Procedures for reporting of emergencies relocating or evacuating occupants
(2) Occupants or staff member duties during emergencies
(3) Floor plans identifying the locations of portable fire extinguishers, other manual fire-extinguishing equipment, other automatic or manual fire suppression systems, first aid equipment, and hazardous material spill equipment
(4) Manual fire alarm pull stations and fire alarm control panels
(5) Floor plans identifying the primary and secondary routes of evacuation for each room or portion of the occupancy
(6) Floor plans indicating the locations of interior areas of refuge
(7) Site maps identifying the designated exterior assembly area for each evacuation route
(8) Assessments of both building systems and management features
(9) Use of alarms
(10) Transmission of alarm to fire department
(11) Response to alarms
(12) Procedures for isolation or extinguishment of fire
(13) Properties and location of hazardous storage or operations
(14) Special procedures for staff members who perform or shut down critical plant operations
(15) A system to account for occupants or staff members after evacuation
(16) Designation of an emergency response coordinator and a back-up coordinator
(17) An alternate means of communications other than the fire alarm
(18) Emergency contact information

A.10.12.1.1 Where a building is not routinely identified by a street address, other means of building identification such as building name or number should be permitted.]

A.10.12.3 Figure A.10.12.3 shows an example of a stairway marking sign. [*101*:A.7.2.2.5.4]

FIGURE A.10.12.3 Example of a Stairway Marking Sign. [*101*:Figure A.7.2.2.5.4]

A.10.13.2.1 Issues to be considered by the AHJ should include, but not be limited to, the availability of utilities to the building.

A.10.14.3 One example of acceptable fire retardance is for the individual decorative vegetation item to exhibit a maximum heat release rate of 100 kilowatts (kW) when tested in accordance with UL 1975, *Standard for Fire Tests for Foamed Plastics Used for Decorative Purposes.* Another example of acceptable fire retardance is for the individual artificial Christmas trees, when exposed to the flames from 1 lb of shredded newspaper distributed around the tree, to meet the following three criteria:

(1) To have flames that do not extend more than 3 ft (0.9 m) above the tree
(2) To have no significant lateral flame spread away from the area affected by the ignition source
(3) To have no flaming droplets that continue flaming after reaching the floor

UL Subject 411, *Outline of Investigation for Artificial Christmas Trees,* now withdrawn, used 1 lb of shredded newspaper to expose Christmas trees and used the preceding pass/fail criteria.

A.10.14.9.4 A method to check for dryness is to grasp a tree branch with a reasonably firm pressure and pull your hand to you, allowing the branch to slip through your grasp. If the needles fall off readily, the tree does not have adequate moisture content and should be removed.

A.10.15.11.6 Visitors to the crop maze should only use flashlights, chemical lights, or similar devices to illuminate their travel through the maze. Candles, gas-fired lanterns, cigarette lighters, or similar open flame or flame-producing devices are prohibited for use inside a crop maze at all times.

A.10.16 For additional guidance, see Chapter 34, General Storage, containing provisions for indoor and outdoor storage of material. Chapter 33, Outside Storage of Tires, contains provisions for outside storage of tires.

A.10.19 See A.10.16.

A.10.19.3.2 The 18 in. (457 mm) dimension is not intended to limit the height of shelving on a wall or shelving against a wall in accordance with 10.19.3.2. Where shelving is installed on a wall and is not directly below sprinklers, the shelves, including storage thereon, can extend above the level of a plane located 18 in. (457 mm) below ceiling sprinkler deflectors. Shelving, and any storage thereon, directly below the sprinklers cannot extend above a plane located 18 in. (457 mm) below the ceiling sprinkler deflectors. [**13:** A.8.6.6]

A.11.1.7.1 Section 230.70 of NFPA 70, the *National Electrical Code (NEC)*, includes requirements for the location and marking of service disconnect means. NFPA 70 applies to most public and private buildings, structures, yards, parking lots, and similar installations. It does not apply to certain electrical installations under the exclusive control of communications utilities or electric utilities, and other specific installations. *(See NFPA 70, Section 90.2.)* Multiple service disconnect means could be provided as allowed by NFPA 70.

A.11.3.3 Continued operation of solid-state elevator equipment is contingent on maintaining the ambient temperature in the range specified by the elevator manufacturer. If the machine room ventilation/air conditioning is connected to the general building system, and that system is shut down during a fire, the fire department might lose the use of elevators due to excessive heat in the elevator machine room. [***101:*** A.9.4.5]

A.11.5.1.3 Examples of portable devices not covered by this standard are blowtorches, melting pots, and weed burners. [**31:** A.1.1.4]

A.11.8 NFPA 92A, *Recommended Practice for Smoke-Control Systems,* provides guidance in implementing systems using pressure differentials to accomplish one or more of the following:

(1) Maintain a tenable environment in the means of egress during the time required for evacuation
(2) Control and reduce the migration of smoke from the fire area
(3) Provide conditions outside the fire zone that assist emergency response personnel to conduct search and rescue operations and to locate and control the fire
(4) Contribute to the protection of life and reduction of property loss

A.12.2.1 Building construction types are defined in NFPA 220, *Standard on Types of Building Construction.* The following material is extracted verbatim from NFPA 220 and is included here as a convenience for users of this *Code.* Any requests for Formal Interpretations (FIs) or Tentative Interim Amendments (TIAs) on the following material should be directed to the Technical Committee on Building Construction. See Table A.12.2.1 for fire resistance ratings for each building construction type.

Type I and Type II Construction. Type I (442 or 332) and Type II (222, 111, or 000) construction shall be those types in which the fire walls, structural elements, walls, arches, floors, and roofs are of approved noncombustible or limited-combustible materials. [**220:**4.3.1]

Type III Construction. Type III (211 or 200) construction shall be that type in which exterior walls and structural members that are portions of exterior walls are of approved noncombustible or limited-combustible materials, and in which fire walls, interior structural elements, walls, arches, floors, and roofs, are entirely or partially of wood of smaller dimensions than required for Type IV construction or are of approved noncombustible, limited-combustible, or other approved combustible materials. [**220:**4.4.1]

Type IV Construction. Type IV (2HH) construction shall be that type in which fire walls, exterior walls, and interior bearing walls and structural elements that are portions of such walls are of approved noncombustible or limited-combustible materials. Other interior structural elements, arches, floors, and roofs shall be of solid or laminated wood without concealed spaces and shall comply with the allowable dimensions of 4.5.5 of NFPA 220. [**220:**4.5.1]

Type V (111 or 000) Construction. Type V (111 or 000) construction shall be that type in which structural elements, walls, arches, floors, and roofs are entirely or partially of wood or other approved material. [**220:**4.6]

A.12.3.2 Fire-resistive construction also includes fire-resistive coatings and sprayed fire-resistive materials, as well as membrane and through-penetration firestops and fire-resistive joint systems. It is important to conduct periodic inspections of fire-resistive construction, especially these elements and components that are directly visible or readily accessible for inspection.

Inspections of sprayed fire-resistive materials and coatings are especially important since they can be subject to delamination, removal, physical abuse, deterioration, and degradation over time. Periodic inspections should be able to identify apparent deficiencies, especially where they crumble or fall off

Table A.12.2.1 Fire Resistance Ratings for Type I through Type V Construction (hr)

	Type I		Type II			Type III		Type IV	Type V	
	442	332	222	111	000	211	200	2HH	111	000
Exterior Bearing Walls[a]										
Supporting more than one floor, columns, or other bearing walls	4	3	2	1	0[b]	2	2	2	1	0[b]
Supporting one floor only	4	3	2	1	0[b]	2	2	2	1	0[b]
Supporting a roof only	4	3	1	1	0[b]	2	2	2	1	0[b]
Interior Bearing Walls										
Supporting more than one floor, columns, or other bearing walls	4	3	2	1	0	1	0	2	1	0
Supporting one floor only	3	2	2	1	0	1	0	1	1	0
Supporting roofs only	3	2	1	1	0	1	0	1	1	0
Columns										
Supporting more than one floor, columns, or other bearing walls	4	3	2	1	0	1	0	H	1	0
Supporting one floor only	3	2	2	1	0	1	0	H	1	0
Supporting roofs only	3	2	1	1	0	1	0	H	1	0
Beams, Girders, Trusses, and Arches										
Supporting more than one floor, columns, or other bearing walls	4	3	2	1	0	1	0	H	1	0
Supporting one floor only	2	2	2	1	0	1	0	H	1	0
Supporting roofs only	2	2	1	1	0	1	0	H	1	0
Floor-Ceiling Assemblies	2	2	2	1	0	1	0	H	1	0
Roof-Ceiling Assemblies	2	1½	1	1	0	1	0	H	1	0
Interior Nonbearing Walls	0	0	0	0	0	0	0	0	0	0
Exterior Nonbearing Walls[c]	0[b]	0[b]	0[b]	0[b]	0[b]	0[b]	0[b]	0[b]	0[b]	0[b]

Note: H = heavy timber members *(see text for requirements).*
[a]See *NFPA 5000,* 7.3.2.1.
[b]See *NFPA 5000,* Section 7.3.
[c]See 4.3.2.12, 4.4.2.3, and 4.5.6.8 of NFPA 220.
[**220**:Table 4.1.1]

when touched. When such conditions are identified, they should be further inspected or tested by qualified third parties to verify their integrity and effectiveness. Where they are found to be deficient, appropriate corrective action should be taken to restore them to their original condition.

A.12.4.3 For requirements on the installation of incinerator doors, record room doors, and vault doors, see NFPA 82, *Standard on Incinerators and Waste and Linen Handling Systems and Equipment,* and NFPA 232, *Standard for the Protection of Records.*

A.12.7.1(4) Walls in good condition with lath and plaster, or gypsum board of not less than ½ in. (13 mm) on each side, can be considered as providing at least a ½-hour fire resistance rating. Additional information on archaic material assemblies can be found in Appendix I of NFPA 914, *Code for Fire Protection of Historic Structures.* [***101***: A.8.3.1(3)]

A.12.7.2.1.1 Fire resistance–rated glazing complying with 12.7.2, where not installed in a door, is considered a wall, not an opening protective. [***101***: A.8.3.2.1.1]

A.12.7.3.2 Some door assemblies have been tested to meet the conditions of acceptance of NFPA 251, *Standard Methods of Tests of Fire Endurance of Building Construction and Materials;* ASTM E 119, *Standard Test Methods for Fire Tests of Building Construction and Materials;* or UL 263, *Standard for Fire Tests of Building Construction and Materials.* Where such assemblies are used, the provisions of 12.7.2 should be applied instead of those of 12.7.3.2. [***101***: A.8.3.3.2]

A.12.7.3.6 Some window assemblies have been tested to meet the conditions of acceptance of NFPA 251; ASTM E 119; or UL 263. Where such assemblies are used, the provisions of 12.7.2 should be applied instead of those of 12.7.3.6. [***101***: A.8.3.3.6]

A.12.7.4.2 Longer ratings might be required where opening protectives are provided for property protection as well as life safety. NFPA 80, *Standard for Fire Doors and Fire Windows,* should be consulted for standard practice in the selection and installation of fire door assemblies and fire window assemblies.

Table 12.7.4.2. A vision panel in a fire door is not a fire window, and, thus, it is not the intent of the "NP" notations

in the "Fire Window Assemblies" column of Table 12.7.4.2 to prohibit vision panels in fire doors. [*101*: A.8.3.4.2]

A.12.7.5.1 ASTM E 2174, *Standard Practice for On-Site Inspection of Installed Fire Stops*, provides guidance for the inspection of through-penetration fire stop systems tested in accordance with ASTM E 814, *Standard Test Method for Fire Tests of Through-Penetration Fire Stops*, and UL 1479, *Standard for Fire Tests of Through-Penetration Fire Stops*. [*101*: A.8.3.5.1]

A.12.7.5.6.3(1)(c) Criteria associated with fireblocking can be found in the building code. [*101*: A.8.3.5.6.3(1)(c)]

A.12.8.1 Although a smoke partition is intended to limit the free movement of smoke, it is not intended to provide an area that would be free of smoke. [*101*: A.8.4.1]

A.12.8.2(2) An architectural, exposed, suspended-grid acoustical tile ceiling with penetrations for sprinklers, ducted HVAC supply and return air diffusers, speakers, and recessed light fixtures is capable of limiting the transfer of smoke. [*101*: A.8.4.2(2)]

A.12.8.3.4 Gasketing of doors should not be necessary, as the clearances in NFPA 80, effectively achieve resistance to the passage of smoke if the door is relatively tight-fitting. [*101*: A.8.4.3.4]

A.12.8.6.2 An air transfer opening, as defined in NFPA 90A, is an opening designed to allow the movement of environmental air between two continguous spaces. [*101*: A.8.4.6.2]

A.12.9.1 Wherever smoke barriers and doors therein require a degree of fire resistance, as specified by requirements in the various occupancy chapters (Chapter 12 through Chapter 42 of NFPA *101*), the construction should be a fire barrier that has been specified to limit the spread of fire and restrict the movement of smoke.

Although a smoke barrier is intended to restrict the movement of smoke, it might not result in tenability throughout the adjacent smoke compartment. The adjacent smoke compartment should be safer than the area on the fire side, thus allowing building occupants to move to that area. Eventually, evacuation from the adjacent smoke compartment might be required. [*101*: A.8.5.1]

A.12.9.2 To ensure that a smoke barrier is continuous, it is necessary to seal completely all openings where the smoke barrier abuts other smoke barriers, fire barriers, exterior walls, the floor below, and the floor or ceiling above. It is not the intent to prohibit a smoke barrier from stopping at a fire barrier if the fire barrier meets the requirements of a smoke barrier (that is, the fire barrier is a combination smoke barrier/fire barrier). [*101*: A.8.5.2]

A.12.9.4.1 The clearance for proper operation of smoke doors is defined as ⅛ in. (3 mm). For additional information on the installation of smoke-control door assemblies, see NFPA 105. [*101*: A.8.5.4.1]

A.12.9.4.4 Where, because of operational necessity, it is desired to have smoke barrier doors that are usually open, such doors should be provided with hold-open devices that are activated to close the doors by means of the operation of smoke detectors and other alarm functions. [*101*: A.8.5.4.4]

A.13.1.11 Such safeguards or fire safety equipment can include, but should not be limited to, automatic fire alarm systems, automatic sprinkler or water spray systems, standpipe and hose, fixed or portable fire extinguishers, breathing apparatus, manual or automatic covers, smoke and heat vents, and carbon dioxide, foam, halogenated, dry chemical, or other special fire-extinguishing systems.

A.13.2.2.4 Prior editions of the *Code* required stages to be protected by a Class III standpipe system in accordance with NFPA 14, *Standard for the Installation of Standpipe and Hose Systems*. NFPA 14 requires that Class II and Class III standpipes be automatic — not manual — because they are intended to be used by building occupants. Automatic standpipe systems are required to provide not less than 500 gpm (1890 L/min) at 100 psi (689 kN). This requirement often can be met only if a fire pump is installed. Installation of a fire pump presents an unreasonable burden for the system supplying the two hose outlets at the side of the stage. The revised wording of 13.2.2.4 offers some relief by permitting the hose outlets to be in accordance with NFPA 13. [*101*: A.12.4.5.12]

A.13.3.1.1 This *Code* contains requirements for automatic sprinkler protection that might not be required by other NFPA codes or standards. These requirements are included in this *Code* from a property protection standpoint in an effort to reduce property damage due to fire, as well as to reduce the costs of manual fire suppression in years to come.

A.13.3.1.5 Properly designed automatic sprinkler systems provide the dual function of both automatic alarms and automatic extinguishment. Dual function is not provided in those cases where early detection of incipient fire and early notification of occupants are needed to initiate actions in behalf of life safety earlier than can be expected from heat-sensitive fire detectors. [*101*: A.9.7.1.3]

A.13.3.1.7.1 *NFPA 72* provides details of standard practice in sprinkler supervision. Subject to the approval of the AHJ, sprinkler supervision is also permitted to be provided by direct connection to municipal fire departments or, in the case of very large establishments, to a private headquarters providing similar functions. *NFPA 72* covers such matters.

Where municipal fire alarm systems are involved, reference should also be made to NFPA 1221, *Standard for the Installation, Maintenance, and Use of Emergency Services Communications Systems*. [*101*: A.9.7.2.1]

A.13.3.2.4 Small loading docks, covered platforms, ducts, or similar small unheated areas can be protected by dry-pendent sprinklers extending through the wall from wet sprinkler piping in an adjacent heated area. Where protecting covered platforms, loading docks, and similar areas, a dry-pendent sprinkler should extend down at a 45-degree angle. The width of the area to be protected should not exceed 7½ ft (2.3 m). Sprinklers should be spaced not over 12 ft (3.7 m) apart. *(See Figure A.13.3.2.4.)* [**13**: A.8.14.7]

A.13.3.2.4.1 Balconies, decks, and similar projections from the building should be treated as exterior roofs and canopies when applying the criteria of 13.3.2.4.1. [**13**: A.8.14.7.1]

A.13.3.2.4.4 Short-term transient storage, such as that for delivered packages, and the presence of planters, newspaper machines, and so forth, should not be considered storage or handling of combustibles. [**13**: A.8.14.7.4]

A.13.3.2.5.3(1) It is the intent to permit a single multipurpose room of less than 12,000 ft^2 (1115 m^2) to have certain small rooms as part of the single room. These rooms could be a kitchen, office, equipment room, and the like. It is also the intent that an addition could be made to an existing building

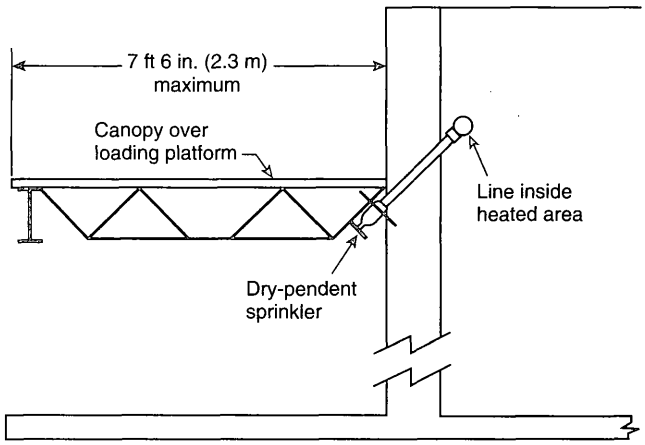

FIGURE A.13.3.2.4 Dry-Pendent Sprinklers for Protection of Covered Platforms, Loading Docks, and Similar Areas. [13:Figure A.8.14.7]

without requiring that the existing building be sprinklered, where both the new and existing buildings have independent means of egress and a fire-rated separation is provided to isolate one building from the other.

A school gymnasium with egress independent of, and separated from, the school would be included in this exception, as would a function hall attached to a church with a similar egress arrangement. [*101*: A.12.3.5.3(1)]

A.13.3.2.9.1 In areas where the replenishment of water supplies is not immediately available from on-site sources, alternate provisions for the water-fill rate requirements of NFPA 13 and NFPA 22 that are acceptable to the AHJ should be provided. Appropriate means for the replenishment of these supplies from other sources, such as fire department tankers, public safety organizations, or other independent contractors should be incorporated into the overall fire safety plan of the facility.

With automatic sprinkler protection required throughout new health care facilities and quick-response sprinklers required in smoke compartments containing patient sleeping rooms, a fire and its life-threatening byproducts can be reduced, thereby allowing the defend-in-place concept to continue. The difficulty in maintaining the proper integrity of life safety elements has been considered and it has been judged that the probability of a sprinkler system operating as designed is equal to or greater than other life safety features. [*101*: A.18.3.5.1]

A.13.3.2.9.4 The requirements for use of quick-response sprinklers intend that quick-response sprinklers be the predominant type of sprinkler installed in the smoke compartment. It is recognized, however, that quick-response sprinklers might not be approved for installation in all areas such as those where NFPA 13 requires sprinklers of the intermediate- or high-temperature classification. It is not the intent of the 13.3.2.9.4 requirements to prohibit the use of standard sprinklers in limited areas of a smoke compartment where intermediate- or high-temperature sprinklers are required.

Where the installation of quick-response sprinklers is impracticable in patient sleeping room areas, appropriate equivalent protection features acceptable to the AHJ should be provided. It is recognized that the use of quick-response sprinklers might be limited in facilities housing certain types of patients or by the installation limitations of quick-response sprinklers. [*101*: A.18.3.5.5]

A.13.3.2.9.5 For the proper operation of sprinkler systems, cubicle curtains and sprinkler locations need to be coordinated. Improperly designed systems might obstruct the sprinkler spray from reaching the fire or might shield the heat from the sprinkler. Many options are available to the designer including, but not limited to, hanging the cubicle curtains 18 in. (455 mm) below the sprinkler deflector; using a ½ in. (13 mm) diagonal mesh or a 70 percent open weave top panel that extends 18 in. (455 mm) below the sprinkler deflector; or designing the system to have a horizontal and minimum vertical distance that meets the requirements of NFPA 13. The test data that form the basis of the NFPA 13 requirements are from fire tests with sprinkler discharge that penetrated a single privacy curtain. [*101*: A.18.3.5.9]

A.13.3.2.10.3 It is not the intent to require existing standard sprinklers in existing sprinkler systems to be replaced with listed quick-response or listed residential sprinklers. It is the intent that new sprinkler systems installed in existing buildings comply with the requirements of Chapter 18 of NFPA *101*, including 18.3.5.5. [*101*: A.19.3.5.3]

A.13.3.2.10.5 It is intended that any valve that controls automatic sprinklers in the entire building or portions of the building, including sectional and floor control valves, be electrically supervised. Valves that control isolated sprinkler heads, such as in laundry and trash chutes, are not required to be electrically supervised. Appropriate means should be taken to ensure that valves that are not electrically supervised remain open. [*101*: A.19.3.5.6]

A.13.3.2.10.6 The provisions of 13.3.2.10.6(6) and (7) are not intended to supplant NFPA 13, which requires that residential sprinklers with more than a 10°F (5.6°C) difference in temperature rating not be mixed within a room. Currently there are no additional prohibitions in NFPA 13 on the mixing of sprinklers having different thermal response characteristics. Conversely, there are no design parameters to make practical the mixing of residential and other types of sprinklers. [*101*: A.19.3.5.7]

A.13.3.2.10.8 For the proper operation of sprinkler systems, cubicle curtains and sprinkler locations need to be coordinated. Improperly designed systems might obstruct the sprinkler spray from reaching the fire or might shield the heat from the sprinkler. Many options are available to the designer including, but not limited to, hanging the cubicle curtains 18 in. (455 mm) below the sprinkler deflector; using ½ in. (13 mm) diagonal mesh or a 70 percent open weave top panel that extends 18 in. (455 mm) below the sprinkler deflector; or designing the system to have a horizontal and minimum vertical distance that meets the requirements of NFPA 13. The test data that forms the basis of the NFPA 13 requirements is from fire tests with sprinkler discharge that penetrated a single privacy curtain. [*101*: A.19.3.5.9]

A.13.3.2.12.1 Where the openings in ceilings or partitions are ¼ in. (6.3 mm) or larger in the smallest dimension, where the thickness or depth of the material does not exceed the smallest dimension of the openings, and where such openings constitute not less than 70 percent of the area of the ceiling or partition material, the disruption of sprinkler spray patterns is permitted to be disregarded. [*101*: A.23.3.5.2]

A.13.3.2.14.2 Although not required by NFPA *101*, the use of residential sprinklers or quick-response sprinklers is encouraged

for new installations of sprinkler systems within dwelling units, apartments, and guest rooms. Caution should be exercised, as the system needs to be designed for the sprinkler being used. [*101*: A.29.3.5.3]

A.13.3.2.16.1 Although not required by NFPA *101*, the use of residential sprinklers or quick-response sprinklers is encouraged for new installations of sprinkler systems within dwelling units, apartments, and guest rooms. Caution should be exercised, as the system needs to be designed for the sprinkler being used. [*101*: A.31.3.5.3]

A.13.3.2.16.6 For example, if an Option 3 sprinkler system were being used to justify use of Class C wall finish in an exit enclosure, the sprinkler system would need to be extended into the exit enclosure, even if the rest of the requirements for Option 3 did not require the sprinklers in the exit enclosure. [*101*: A.31.3.5.11]

A.13.3.2.17.3.3 The decision to permit the use of the criteria from NFPA 13D in these occupancies is based on the following:

(1) The desire to obtain a level of fire suppression and control that is approximately equivalent to that delivered by residential facilities protected by such systems *(See A.1.1 in NFPA 13D.)*
(2) The fact that potential fire exposure and challenge to the suppression system in a small lodging and rooming occupancy is of the same nature and no more severe than that found in residences [*101*: A.26.3.6.3.3]

A.13.3.2.19.2.1 Where any provision requires the use of an automatic sprinkler system in accordance with 13.3.2.19.2, the provision of 13.3.2.19.2.2 is not permitted to be used. [*101*: A.32.2.3.5.1]

A.13.3.2.19.2.2 Where a facility utilizing the provision of 13.3.2.19.2.2 contains residents who can no longer comply with the 3-minute evacuation response, 33.1.7 of NFPA *101* requires the facility to comply with the requirements for new construction, including automatic sprinkler protection. (See also A.33.1.7 of NFPA *101*.) [*101*: A.32.2.3.5.2]

A.13.3.2.19.2.3.2 The decision to permit the use of the criteria from NFPA 13D in these occupancies is based on the following:

(1) The desire to obtain a level of fire suppression and control approximately equivalent to that delivered by residential facilities protected by such systems *(See A.1.1 in NFPA 13D.)*
(2) The fact that potential fire exposure and challenge to the suppression system in a small board and care facility are of the same nature and are no more severe than those found in residences

Chapter 13 permits the use of NFPA 13D and NFPA 13R outside of their scopes. This permission is based on a review of the occupancy and a recognition that the fires in board and care facilities are similar to those of other residential occupancies and that the level of protection is appropriate. The requirements of NFPA 13D and NFPA 13R have been supplemented with requirements for additional water supplies to compensate for the special needs of the board and care occupancy.

NFPA 13D contains additional requirements for a piping system serving both sprinkler and domestic needs. [*101*: A.32.2.3.5.3.2]

A.13.3.2.20.1.1 It is intended that this requirement apply to existing small facilities that are converted to large facilities.

Chapter 13 permits the use of NFPA 13D and NFPA 13R outside of their scopes. This permission is based on a review of the occupancy and a recognition that the fires in board and care facilities are similar to those of other residential occupancies and that the level of protection is appropriate. In some circumstances, such as those for impractical evacuation capabilities, the requirements of NFPA 13D and NFPA 13R have been supplemented with requirements for additional water supplies to compensate for the special needs of the board and care occupancy. [*101*: A.33.3.3.5.1]

A.13.3.2.20.2.1.1 The decision to permit the use of the criteria from NFPA 13D in these occupancies is based on the following:

(1) The desire to obtain a level of fire suppression and control approximately equivalent to that delivered by residential facilities protected by such systems *(See A.1.1 in NFPA 13D.)*
(2) The fact that potential fire exposure and challenge to the suppression system in a small board and care facility are of the same nature and are no more severe than those found in residences.

Chapter 13 permits the use of NFPA 13D and NFPA 13R outside of their scopes. This permission is based on a review of the occupancy and a recognition that the fires in board and care facilities are similar to those of other residential occupancies and that the level of protection is appropriate. In some circumstances, such as those for impractical evacuation capabilities, the requirements of NFPA 13D and NFPA 13R have been supplemented with requirements for additional water supplies to compensate for the special needs of the board and care occupancy. [*101*: A.33.2.3.5.2.1]

A.13.3.2.24.2 The enabling legislation adopting this *Code* should specify a specific date for compliance with 13.3.2.24.2. Building owners and managers should be notified of this requirement within 180 days of code adoption. The following items should be considered by the AHJ as guidance in evaluating compliance plans:

(1) Shortage of qualified contractors to install sprinkler systems
(2) Impact on owners and tenants as a result of existing conditions contained in lease agreements
(3) Environmental constraints resulting from contaminated material being removed from limited areas of the building during installation of sprinklers and attendant activity
(4) Available time to install sprinklers in the occupied spaces
(5) Financial constraints of owners being able to fund the cost of installing automatic sprinklers with associated costs
(6) Ability of the owner to coordinate general building remodeling with the actual sprinkler retrofit process

A.13.3.2.24.2.3 Examples of retrofit schedules can include the following:

(1) Plan submitted and approved within 1 year; 33% of square footage completed within 4 years; 66% of square footage completed within 8 years; 100% of square footage completed within 12 years.
(2) Plans submitted and approved with 1 year; all common areas completed within 4 years; 50% of remaining area completed within 8 years; 100% of remaining area completed within 12 years.
(3) An alternative schedule can be approved by the AHJ that does not have any intermediary stages but has to be 100% complete within 8 years.

A.13.3.2.25 For the purpose of the requirements in 13.3.2.25.1 through 13.3.2.25.3, combustibles include all

combustible materials in storage as well as noncombustible materials that are enclosed, encapsulated, or packaged in combustible materials.

A.13.3.2.25.2 Portions of structures that are subdivided by fire walls can be considered to be separate buildings for the purpose of applying this *Code*. Fire walls by their definition have sufficient structural stability to maintain the integrity of the wall in the event of the collapse of the building construction on either side of the wall.

A.13.3.3.4.1 The components are not required to be open or exposed. Doors, removable panels, or valve pits can be permitted to satisfy the need for accessibility. Such equipment should not be obstructed by features such as walls, ducts, columns, direct burial, or stock storage. [**25:** A.4.1.1]

A.13.3.3.4.2 Inspection, testing, and maintenance can be permitted to be contracted with an inspection, testing, and maintenance service. [**25:** A.4.1.2]

A.13.3.3.4.4 Recalled products should be replaced or remedied. Such replacement or remedial product should be installed in accordance with the manufacturer's instructions and the appropriate NFPA installation standards. A recalled product is a product subject to a statute or administrative regulation specifically requiring the manufacturer, importer, distributor, wholesaler, or retailer of a product, or any combination of such entities, to recall the product, or a product voluntarily recalled by a combination of such entities. [**25:** A.4.1.4]

A.13.3.3.4.5 Fire protection systems should not be removed from service when the building is not in use; however, where a system that has been out of service for a prolonged period (such as in the case of idle or vacant properties) is returned to service, it is recommended that a responsible and experienced contractor be retained to perform all inspections and tests. [**25:** A.4.1.5]

A.13.3.3.5.1 Typical records include, but are not limited to, valve inspections; flow, drain, and pump tests; and trip tests of dry pipe, deluge, and preaction valves.

Computer programs that file inspection and test results should provide a means of comparing current and past results and should indicate the need for corrective maintenance or further testing. Acceptance test records should be retained for the life of the system or its special components.

Subsequent test records should be retained for a period of 1 year after the next test. The comparison determines deterioration of system performance or condition and the need for further testing or maintenance. [**25:** A.4.3.1]

A.13.3.3.7.1 A minimum of two sprinklers of each type and temperature rating installed should be provided. [**25:** A.5.4.1.4]

A.13.3.3.7.3 Other types of wrenches could damage the sprinklers. [**25:** A.5.4.1.6]

A.13.3.3.9 Corrosion-resistant or specially coated sprinklers should be installed in locations where chemicals, moisture, or other corrosive vapors exist. [**25:** A.5.4.1.8]

A.13.3.3.11 Conversion of dry pipe systems to wet pipe systems causes corrosion and accumulation of foreign matter in the pipe system and loss of alarm service. [**25:** A.5.4.2]

A.13.3.3.12 Where pressure testing listed CPVC piping, the sprinkler systems should be filled with water and air should be bled from the highest and farthest sprinkler before test pressure is applied. Air or compressed gas should never be used for pressure testing. [**25:** A.5.4.3]

A.13.3.4.3.1 A clearly visible tag alerts building occupants and the fire department that all or part of the water-based fire protection system is out of service. The tag should be weather resistant, plainly visible, and of sufficient size [typically 4 in. × 6 in. (100 mm × 150 mm)]. The tag should identify which system is impaired, the date and time impairment began, and the person responsible. Figure A.13.3.4.3.1 illustrates a typical impairment tag. [**25:** A.14.3.1]

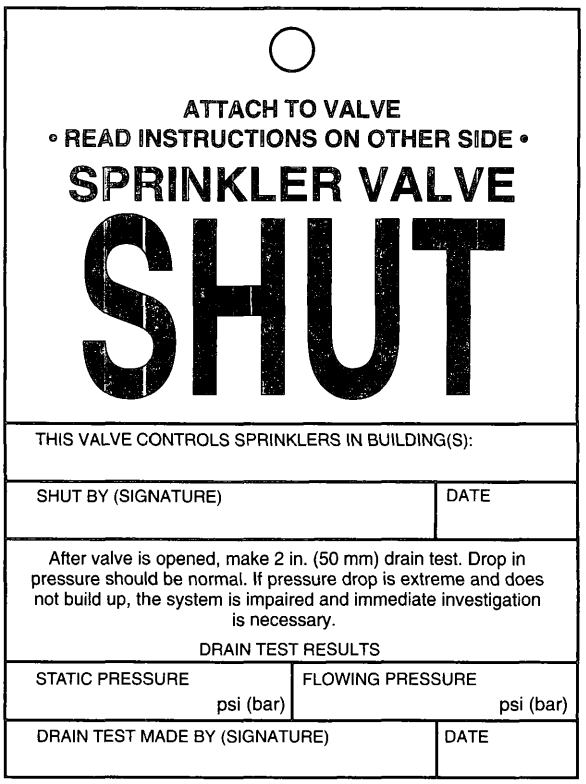

FIGURE A.13.3.4.3.1 Sample Impairment Tag. [25:Figure A.14.3.1]

A.13.3.4.3.2 An impairment tag should be placed on the fire department connection to alert responding fire fighters of an abnormal condition. An impairment tag that is located on the system riser only could go unnoticed for an extended period if fire fighters encounter difficulty in gaining access to the building or sprinkler control room. [**25:** A.14.3.2]

A.13.3.4.3.5 The need for temporary fire protection, termination of all hazardous operations, and frequency of inspections in the areas involved should be determined. All work possible should be done in advance to minimize the length of the impairment. Where possible, temporary feedlines should be used to maintain portions of systems while work is completed.

Water-based fire protection systems should not be removed from service when the building is not in use. Where a system that has been out of service for a prolonged period, such as in the case of idle or vacant properties, is returned to service, qualified personnel should be retained to inspect and test the systems. [**25:** A.14.5]

A.13.3.4.3.5.2(3)(b) A fire watch should consist of trained personnel who continuously patrol the affected area. Ready access to fire extinguishers and the ability to promptly notify the fire department are important items to consider. During the patrol of the area, the person should not only be looking for fire, but making sure that the other fire protection features of the building such as egress routes and alarm systems are available and functioning properly. [25: A.14.5.2(3)(b)]

A.13.3.4.3.5.2(3)(c) Temporary water supplies are possible from a number of sources including use of a large-diameter hose from a fire hydrant to a fire department connection, use of a portable tank and a portable pump, or use of a standby fire department pumper and/or tanker. [25: A.14.5.2(3)(c)]

A.13.3.4.3.5.2(3)(d) Depending on the use and occupancy of the building, it could be enough in some circumstances to stop certain processes in the building or to cut off the flow of fuel to some machines. It is also helpful to implement "No Smoking" and "No Hot Work" (cutting, grinding, or welding) policies while the system is out of service because these activities are responsible for many fire ignitions. [25: A.14.5.2(3)(d)]

A.13.4.1.5 Because of the unique nature of fire pump units, the approval should be obtained prior to the assembly of any specific component. [20: A.5.2]

A.13.4.2 Special consideration needs to be given to fire pump installations installed below grade. Light, heat, drainage, and ventilation are several of the variables that need to be addressed. Some locations or installations might not require a pump house. Where a pump room or pump house is required, it should be of ample size and located to permit short and properly arranged piping. The suction piping should receive first consideration. The pump house should preferably be a detached building of noncombustible construction. A one-story pump room with a combustible roof, either detached or well cut off from an adjoining one-story building, is acceptable if sprinklered. Where a detached building is not feasible, the pump room should be located and constructed so as to protect the pump unit and controls from falling floors or machinery and from fire that could drive away the pump operator or damage the pump unit or controls. Access to the pump room should be provided from outside the building. Where the use of brick or reinforced concrete is not feasible, metal lath and plaster is recommended for the construction of the pump room. The pump room or pump house should not be used for storage purposes. Vertical shaft turbine–type pumps might necessitate a removable panel in the pump house roof to permit the pump to be removed for inspection or repair. Proper clearances to equipment should be provided as recommended by the manufacturer's drawings. [20: A.5.12]

A.13.4.2.1 A fire pump that is inoperative for any reason at any time constitutes an impairment to the fire protection system. It should be returned to service without delay.

Rain and intense heat from the sun are adverse conditions to equipment not installed in a completely protective enclosure. At a minimum, equipment installed outdoors should be shielded by a roof or deck. [20: A.5.12.1]

A.13.4.2.6 Pump rooms and pump houses should be dry and free of condensate. To accomplish a dry environment, heat might be necessary. [20: A.5.12.6]

A.13.4.3 Isolation valves and control valves are considered to be identical when used in conjunction with a backflow prevention assembly. [20: A.5.16]

A.13.4.4 Internal combustion engines necessarily embody moving parts of such design and in such number that the engines cannot give reliable service unless given diligent care. The manufacturer's instruction book covering care and operation should be readily available, and pump operators should be familiar with its contents. All of its provisions should be observed in detail. [20: A.11.6]

A.13.4.4.2 See NFPA 25, *Standard for the Inspection, Testing, and Maintenance of Water-Based Fire Protection Systems*, for proper maintenance of engine(s), batteries, fuel supply, and environmental conditions. [20: A.11.6.2]

A.13.4.4.4 Active systems that are permanently added to fuel tanks for removing water and particulates from the fuel can be acceptable, provided the following apply:

(1) All connections are made directly to the tank and are not interconnected with the engine or its fuel supply and return piping in any way.
(2) There are no valves or other devices added to the engine or its fuel supply and return piping in any way. [20: A.11.6.4]

A.13.4.4.5 Proper engine temperature when the engine is not running can be maintained through the circulation of hot water through the jacket or through heating of engine water by electric elements. As a general rule, water heaters and oil heaters are required for diesel engines below 70°F (21°C). The benefits to be gained are as follows:

(1) Quick starting (fire pump engines may have to carry full load as soon as started)
(2) Reduced engine wear
(3) Reduced drain on batteries
(4) Reduced oil dilution
(5) Reduced carbon deposits, so that the engine is far more likely to start every time [20: A.11.6.5]

A.13.4.5.1.2 It is recommended that the pilot lamp for alarm and signal service have operating voltage less than the rated voltage of the lamp to ensure long operating life. When necessary, a suitable resistor should be used to reduce the voltage for operating the lamp. [20: A.12.4.1.2]

A.13.4.5.2.2(3) The following trouble signals should be monitored remotely from the controller:

(1) A common signal can be used for the following trouble indications: the items in 13.4.5.1.3(1) through 13.4.5.1.3(5) and loss of output of battery charger on the load side of the dc overcurrent protective device.
(2) If there is no other way to supervise loss of power, the controller can be equipped with a power failure circuit, which should be time delayed to start the engine upon loss of current output of the battery charger. [20: A.12.4.2.2(3)]

A.13.4.6.2 In addition, representatives of the installing contractor and owner should be present. [20: A.14.2.2]

A.13.4.6.4 If a complete fire pump submittal package is available, it should provide for comparison of the equipment specified. Such a package should include an approved copy of the fire pump room general arrangement drawings, including the electrical layout, the layout of the pump and water source, the layout of the pump room drainage details, the pump foundation layout, and the mechanical layout for heat and ventilation. [20: A.14.2.4]

A.13.5.3 The installation of backflow prevention devices on services supplying water to existing fire protection systems can result in excessive pressure losses. Therefore, installation of backflow prevention devices to protect public health has to be accomplished with due regard for the implications on fire protection. The provisions of AWWA Manual 14, *Backflow Prevention and Cross Connection Control*, should be used as a guide for determining the appropriate protection for public health. Hydraulic calculations and water supply analysis should be conducted prior to installation to determine the impact on fire protection.

A.13.6.1.2 Employees expected or anticipated to use fire extinguishers should be instructed on the hazards of fighting fire, how to properly operate the fire extinguishers available, and what procedures to follow in alerting others to the fire emergency.

The intended application of footnote e in Table 13.6.1.2 is for warehouse areas that are generally unoccupied except by operators on forklifts or similar vehicles or occasional workers or maintenance personnel. The footnote is not intended to apply to office or process areas. Office and process areas have to be provided with fixed extinguishers in accordance with NFPA 10 and applicable provisions in this *Code*.

A.13.6.2.2 AHJs should determine the acceptability and credibility of the organization listing or labeling fire extinguishers. AHJs should determine if the organization tests to all the requirements of NFPA 10 and this *Code*. Factors such as the structure of the organization, its principal fields of endeavor, its reputation and established expertise, its involvement in the standards-writing process, and the extent of its follow-up service programs should all be assessed before recognition is given. [**10:** A.1.3.2]

A.13.6.2.3 The AHJ should determine the thoroughness of the factory follow-up quality assurance program exercised by third-party certification organizations listing and labeling portable fire extinguishers. The specified factory follow-up standard provides a minimum basis for that determination. Application of the factory follow-up standard provides a reasonable assurance that portable fire extinguishers sold to the public continue to have the same structural reliability and performance as the fire extinguishers the manufacturer originally submitted to the listing and labeling organization for evaluation. [**10:** A.1.3.3]

A.13.6.3.6 Acceptable means of identifying the fire extinguisher locations could include arrows, lights, signs, or coding of the wall or column. [**10:** A.1.5.6]

A.13.6.3.7 In situations where it is necessary that fire extinguishers be temporarily provided, a good practice is to provide portable stands, consisting of a horizontal bar on uprights with feet, on which the fire extinguishers can be hung. [**10:** A.1.5.7]

A.13.6.3.13 Vented fire extinguisher cabinets should utilize tinted glass and should be constructed to prevent the entrance of insects and the accumulation of water. Vented fire extinguisher cabinets constructed in this manner will lower the maximum internal temperature 10°F to 15°F (5.6°C to 8.3°C). [**10:** A.1.5.13]

A.13.6.3.14 The following precautions should be noted where fire extinguishers are located in areas that have temperatures outside the range of 40°F to 120°F (4°C to 49°C):

(1) AFFF and FFFP fire extinguishers cannot be protected against temperatures below 40°F (4°C) by adding an antifreeze charge because it will tend to destroy the effectiveness of the extinguishing agent.
(2) Plain water fire extinguishers should not be protected against temperatures below 40°F (4°C) with ethylene glycol antifreeze. Calcium chloride solutions should not be used in stainless steel fire extinguishers.
(3) Fire extinguishers installed in machinery compartments, diesel locomotives, automotive equipment, marine engine compartments, and hot processing facilities can easily be subjected to temperatures above 120°F (49°C). Selection of fire extinguishers for hazard areas with temperatures above the listed limits should be made on the basis of recommendations by manufacturers of this equipment. [**10:** A.1.5.14]

A.13.6.3.16 The manual can be specific to the fire extinguisher involved or it can cover many types. [**10:** A.1.5.16]

A.13.6.4 OSHA federal regulations require that manufacturers communicate information as to the type of chemicals in a product that can be hazardous and the level of hazard. This information is contained in the Material Safety Data Sheet (MSDS) created for each chemical or mixture of chemicals and is summarized on labels or tags attached to the product. Additionally, state and local authorities have enacted similar acts and regulations requiring identification of chemicals and hazardous ingredients in products. MSDSs for fire extinguisher agents are available on request from a fire equipment dealer or distributor, or the fire equipment manufacturer.

The identification of contents information will enable determination of the type of chemicals contained in the fire extinguisher and help to resolve complications arising from an unusual use of the agent. The hazardous materials identification systems (HMIS) [in Canada, workplace hazardous materials identification systems (WHMIS)] developed by the National Paint & Coatings Association uses a three-place format with numerical indexes from 0 to 4. The first place is for "toxic properties," the second place is for "flammability," and the third place is for "reactivity" with other chemicals. Most fire extinguishers have a 0 numerical index in the second and third places because they are nonflammable and relatively inert.

Information on the HMIS can be obtained from Label Master, Inc., Chicago, IL, or National Paint & Coatings Association, Washington, DC. Extinguisher contents information can be integrated into the standard fire extinguisher label in some form or can be contained on a separate label or tag. The following is a typical chemical contents identification marking. [**10:** A.1.6]

CONTENTS: ABC DRY CHEMICAL/HMIS 1-0-0
MUSCOVITE MICA,
MONOAMMONIUM PHOSPHATE
AMMONIUM SULFATE/NUISANCE DUST
IRRITANT/
CONTENTS UNDER PRESSURE
[Manufacturer's Name, Mailing Address, Phone Number]

A.13.6.5.1 See Annex H of NFPA 10 for information on conditions of selection for fire extinguishers. [**10:** A.4.1]

A.13.6.5.1.1 Halon agent is highly effective for extinguishing fire and evaporates after use, leaving no residue. Halon agent is, however, included in the Montreal Protocol list of controlled substances developed under the United Nations Environment Program. Where agents other than halon can satisfactorily protect the hazard, they should be used instead of

halon. Halon use should be limited to extinguishment of unwanted fire; halon should not be used for routine training of personnel. [10: A.4.1.1]

A.13.6.5.2.1.1 It is recommended that inverting types of fire extinguishers be replaced with currently available models. Manufacture of inverting types of fire extinguishers and their listing by Underwriters Laboratories Inc. was discontinued in 1969. As the availability of suitable replacement parts and recharge materials diminishes, it has become increasingly difficult to maintain these types of fire extinguishers in a safe and reliable operating condition. Inverting-type fire extinguishers (e.g., soda acid, foam, and cartridge-operated water) are now considered obsolete and are required to be removed from service no later than the next required date for hydrostatic testing. [10: A.4.2.1.1]

A.13.6.5.2.1.2 Examples of extinguishers for protecting Class B hazards are as follows:

(1) Aqueous film forming foam (AFFF)
(2) Film forming fluoroprotein foam (FFFP)
(3) Carbon dioxide
(4) Dry chemical type
(5) Halogenated agent type *(For halogenated agent–type fire extinguishers, see 13.6.5.1.1.)* [10: A.4.2.1.2]

A.13.6.5.2.1.3 The use of dry chemical fire extinguishers on wet energized electrical equipment (such as rain-soaked utility poles, high-voltage switch gear, and transformers) could aggravate electrical leakage problems. The dry chemical in combination with moisture provides an electrical path that can reduce the effectiveness of insulation protection. The removal of all traces of dry chemical from such equipment after extinguishment is recommended. [10: A.4.2.1.3]

A.13.6.5.2.1.4 Extinguishers and extinguishing agents for Class D hazards include the following:

(1) Chemical reaction between burning metals and many extinguishing agents (including water) can range from explosive to inconsequential, depending in part on the type, form, and quantity of metal involved. In general, the hazards from a metal fire are significantly increased when such extinguishing agents are applied. The advantages and limitations of a wide variety of commercially available metal fire extinguishing agents are discussed in Section 6, Chapter 26, of the NFPA *Fire Protection Handbook.* Consult the MSDS of the Class D hazard being protected or the extinguisher manufacturer.
(2) The agents and fire extinguishers discussed in this section are of specialized types, and their use often involves special techniques peculiar to a particular combustible metal. A given agent will not necessarily control or extinguish all metal fires. Some agents are valuable in working with several metals; others are useful in combating only one type of metal fire. The AHJs should be consulted in each case to determine the desired protection for the particular hazard involved.
(3) Certain combustible metals and reactive chemicals require special extinguishing agents or techniques. If there is doubt, applicable NFPA standards should be consulted or reference made to NFPA 49, *Hazardous Chemicals Data,* or NFPA 325, *Guide to Fire Hazard Properties of Flammable Liquids, Gases, and Volatile Solids.* (Note: Although NFPA 49 and NFPA 325 have been officially withdrawn from the *National Fire Codes®*, the information is still available in NFPA's *Fire Protection Guide to Hazardous Materials.*)
(4) Reference should be made to the manufacturer's recommendations for use and special technique for extinguishing fires in various combustible metals.
(5) Fire of high intensity can occur in certain metals. Ignition is generally the result of frictional heating, exposure to moisture, or exposure from a fire in other combustible materials. The greatest hazard exists when these metals are in the molten state, in finely divided forms of dust, turnings, or shavings.

The properties of a wide variety of combustible metals and the agents available for extinguishing fires in these metals are discussed in Section 4, Chapter 16, and Section 6, Chapter 26, of the NFPA *Fire Protection Handbook.* [10: A.4.2.1.4]

A.13.6.5.3 Fire extinguishers for cooking media (vegetable or animal oils and fats) traditionally followed Table 13.6.6.3.1 for extra (high) hazard, requiring a minimum 40-B rated sodium bicarbonate or potassium bicarbonate dry chemical extinguisher. The evolution of high-efficiency cooking appliances and the change to hotter-burning vegetable shortening has created a more severe fire hazard. Testing has shown that wet chemical extinguishers have several times the cooking fire–extinguishing capability of a minimum 40-B rated sodium bicarbonate or potassium bicarbonate dry chemical extinguisher, which has prompted the creation of a new classification and a new listing test protocol. The test protocol is found in ANSI/UL-711, *Standard for Rating and Fire Testing of Fire Extinguishers,* 1995.

See NFPA 96, *Standard for Ventilation Control and Fire Protection of Commercial Cooking Operations,* and Chapter 50 for further information. Class K fire extinguishers equipped with "extended wand–type" discharge devices that can permit subsurface injection of wet chemical extinguishing agents into hot cooking media are not safe for use. Subsurface injection causes a thermodynamic reaction comparable to an explosion, which can cause serious injury or death and can contribute to the rapid spread of fire. [10: A.4.3.2]

A.13.6.5.3.2 Figure A.13.6.5.3.2(a) and Figure A.13.6.5.3.2(b) show the recommended wording for the Class K placard. Recommended size is 7⅝ in. × 11 in. [10: A.4.3.2.2]

A.13.6.6.1.1 The following are items that affect distribution of portable fire extinguishers:

(1) Area and arrangement of the building occupancy conditions
(2) Severity of the hazard
(3) Anticipated classes of fire
(4) Other protective systems or devices
(5) Distances to be traveled to reach fire extinguishers

In addition, the following factors should be considered:

(1) Anticipated rate of fire spread
(2) Intensity and rate of heat development
(3) Smoke contributed by the burning materials
(4) Accessibility of a fire to close approach with portable fire extinguishers

Wheeled fire extinguishers have additional agent and range and should be considered for areas where the additional protection is needed. Portable fire extinguishers offer the occupant a means to assist in evacuation of a building or occupancy. They are useful to knock down the fire if it occurs along the evacuation route. Whenever possible, the individual property should be surveyed for actual protection requirements. [10: A.5.1.1]

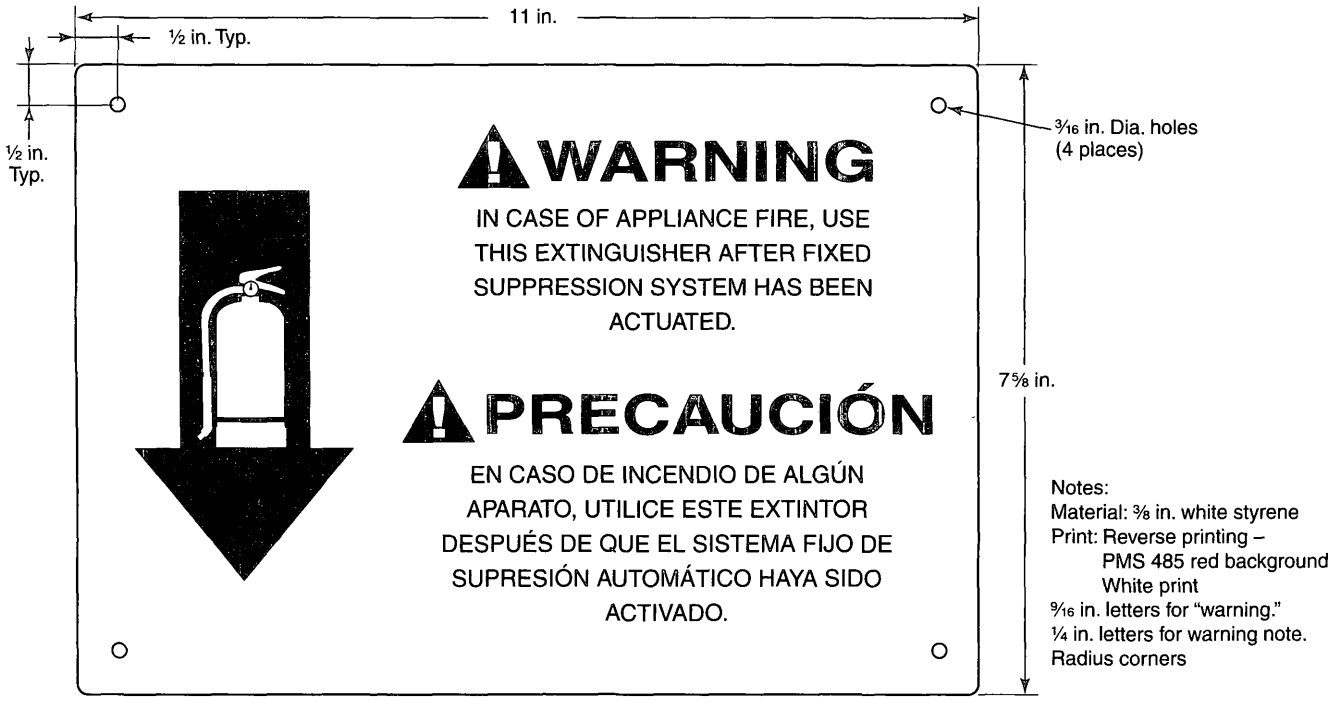

FIGURE A.13.6.5.3.2(a) Typical Class K Placard (English/Spanish). [10:Figure A.4.3.2.2(a)]

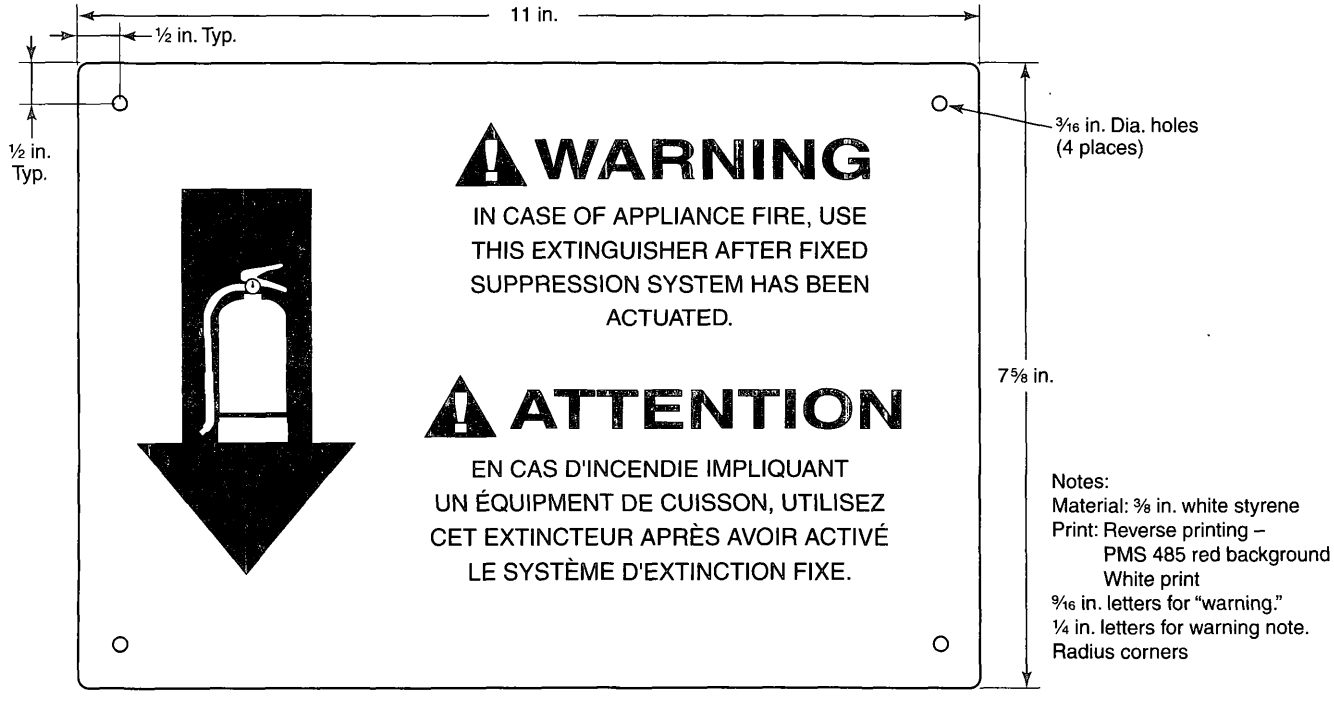

FIGURE A.13.6.5.3.2(b) Typical Class K Placard (English/French). [10:Figure A.4.3.2.2(b)]

A.13.6.6.1.2 Most buildings have Class A fire hazards. In any occupancy, there could be a predominant hazard as well as special hazard areas requiring supplemental protection. For example, a hospital will generally have need for Class A fire extinguishers covering patients' rooms, corridors, offices, and so forth, but will need Class B fire extinguishers in laboratories, and where flammable anesthetics are stored or handled, and Class C fire extinguishers in electrical switch gear or generator rooms, and Class K extinguishers in kitchens. [**10:** A.5.1.2]

A.13.6.6.1.2.2 If fire extinguishers intended for different classes of fires are grouped, their intended use should be marked conspicuously to aid in the choice of the proper fire extinguisher at the time of a fire. In an emergency, the tendency is to reach for the closest fire extinguisher. If this fire extinguisher is of the wrong type, the user could endanger himself or herself and the property he or she is endeavoring to protect. Wherever possible, it is preferable to have only those fire extinguishers available that can be safely used on any type of fire in the immediate vicinity. [**10:** A.5.1.2.2]

A.13.6.6.3 Flammable liquids of appreciable depth are those with a depth greater than ¼ in. (0.64 cm). [**10:** A.5.3]

A.13.6.6.4 See A.13.6.6.3.

A.13.6.6.4.1 Where such personnel are not available, the hazard should be protected by fixed systems. [**10:** A.5.4.1]

A.13.6.6.5 Electrical equipment should be de-energized as soon as possible to prevent reignition. [**10:** A.5.5]

A.13.6.6.8.1.2 A fire equipment servicing agency is usually the most reliable means available to the public for having maintenance and recharging performed. Large industries could find it desirable to establish their own maintenance and recharge facilities, training personnel to perform these functions. Service manuals and parts lists should be obtained from the fire extinguisher manufacturer. [**10:** A.6.1.4]

A.13.6.6.8.2.1 Frequency of fire extinguisher inspections should be based on the need of the area in which fire extinguishers are located. The required monthly inspection is a minimum. An inspection should be more frequent if any of the following conditions exist:

(1) High frequency of fires in the past
(2) Severe hazards
(3) Susceptibility to tampering, vandalism, or malicious mischief
(4) Possibility of, or experience with, theft of fire extinguishers
(5) Locations that make fire extinguishers susceptible to mechanical injury
(6) Possibility of visible or physical obstructions
(7) Exposure to abnormal temperatures or corrosive atmospheres
(8) Characteristics of fire extinguishers, such as susceptibility to leakage

Due to these conditions, more frequent inspections might be enhanced through electronic monitoring of the fire extinguisher. [**10:** A.6.2.1]

A.13.6.6.8.3 Persons performing maintenance operations usually come from two major groups:

(1) Fire extinguisher service agencies
(2) Trained industrial safety or maintenance personnel

Fire extinguishers owned by individuals are often neglected because there is no planned periodic follow-up program. It is recommended that such owners become familiar with their fire extinguishers so they can detect telltale warnings during inspection that could suggest the need for maintenance. When maintenance is indicated, it should be performed by trained persons having proper equipment. *(See 13.6.6.8.1.2.)*

The purpose of a well-planned and well-executed maintenance program for a fire extinguisher is to maximize the following probabilities:

(1) The extinguisher will operate properly between the time intervals established for maintenance examinations in the environment to which it is exposed.
(2) The extinguisher will not constitute a potential hazard to persons in its vicinity or to operators or rechargers of fire extinguishers.

Any replacement parts needed should be obtained from the manufacturer or a representative. [**10:** A.6.3]

A.13.6.6.8.3.3 In addition to the required tag or label *(see 13.6.6.8.3.3)*, a permanent file record should be kept for each fire extinguisher. This file record should include the following information, as applicable:

(1) The maintenance date and the name of person or agency performing the maintenance
(2) The date when last recharged and the name of person or agency performing the recharge
(3) The hydrostatic retest date and the name of person or agency performing the hydrostatic test
(4) Description of dents remaining after passing a hydrostatic test
(5) The date of the 6-year maintenance for stored-pressure dry chemical and halogenated agent types *(See 6.3.3 of NFPA 10.)*

As stated in Section 1.2 of NFPA 10, "Nothing in this standard shall be construed as a restriction on new technologies or alternative arrangements, provided that the level of protection as herein described is not lowered and is acceptable to the AHJ." It is recognized that an electronic bar coding system is often acceptable to the AHJ in lieu of a tag or label for maintenance recordkeeping.

Under special circumstances or when local requirements are in effect, additional information can be desirable or required. [**10:** A.6.3.4]

A.13.6.6.8.4 General safety guidelines for recharging include the following:

(1) Make sure all pressure is vented from fire extinguisher before attempting to remove valve body or fill closure. WARNING: Do not depend on pressure-indicating devices to tell if container is under pressure because they could malfunction.
(2) Use proper recharge materials when refilling a fire extinguisher. Mixing of some extinguishing agents could cause a chemical reaction, resulting in a dangerous pressure buildup in the container.
(3) The weight of agent as specified on the nameplate is critical. Overfilling could render the fire extinguisher dangerous or ineffective.
(4) All sealing components should be cleaned and properly lubricated to prevent leakage after recharge.
(5) Check pressure-indicating device to ascertain that it is reading properly.
(6) Most manufacturers recommend the use of dry nitrogen as an expellant gas for stored-pressure fire extinguishers.

Limiting charging pressure regulator setting to 25 psi (172 kPa) above service pressure as per 6.4.4.2 of NFPA 10 prevents gauge damage and loss of calibration. WARNING: Never connect the fire extinguisher to be charged directly to the high-pressure source. Connecting directly to the high-pressure source could cause the container to rupture, resulting in injury. Never leave a fire extinguisher connected to the regulator of a high-pressure source for an extended period of time. A defective regulator could cause the container to rupture due to excess pressure.

(7) Use the manufacturer's recommended charging adaptor to prevent damage to a valve and its components.

(8) When recharging separate expellant source fire extinguishers, make sure filled enclosure is in place and tightened down. Replace all safety devices prior to installing replacement cartridges.

(9) Use only gas cartridges recommended by the manufacturer. Cartridge features such as pressure relief, puncturing capabilities, fill density, and thread compatibility are designed and approved to specific functional requirements.

(10) Use proper safety seals, as other types, such as meter seals, could possibly fail to break at the prescribed requirements.

(11) Regulators utilized on wheeled fire extinguishers are factory pinned at the operating pressure and should not be field adjusted. [**10:** A.6.4.1]

A.13.6.6.8.5.4 A condemned cylinder or fire extinguisher can only be destroyed by its owner or at the owner's direction. It is strongly recommended that a record be kept of cylinders or fire extinguishers that are recommended to be destroyed. [**10:** A.7.1.4]

A.13.6.6.8.5.4(1) For welding or brazing on mild steel shells, consult the manufacturer of the fire extinguisher. [**10:** A.7.1.4(1)]

A.13.6.6.8.5.6 Structural integrity of aluminum shells or cylinders is reduced when they are exposed to temperatures in excess of 350°F (177°C). These temperatures can occur under fire exposure without any visual evidence or during repainting operations where oven drying is utilized. [**10:** A.7.1.6]

A.13.7.1.4.3 Records of conducted maintenance and testing and a copy of the certificate of compliance should be maintained. [***101:*** A.9.6.1.5]

A.13.7.1.4.4 A fire watch should at least involve some special action beyond normal staffing, such as assigning an additional security guard(s) to walk the areas affected. Such individuals should be specially trained in fire prevention and in occupant and fire department notification techniques, and they should understand the particular fire safety situation for public education purposes. (*Also see NFPA 601, Standard for Security Services in Fire Loss Prevention.*) [***101:*** *A.9.6.1.6*]

A.13.7.1.4.7.4 It is not the intent of 13.7.1.4.7.4 to require manual fire alarm boxes to be attached to movable partitions or to equipment, nor is it the intent to require the installation of permanent structures for mounting purposes only. [***101:*** A.9.6.2.4]

A.13.7.1.4.7.5 The manual fire alarm box required by 13.7.1.4.7.5 is intended to provide a means to manually activate the fire alarm system when the automatic fire detection system or waterflow devices are out of service due to maintenance or testing, or where human discovery of the fire precedes automatic sprinkler system or automatic detection system activation. Where the fire alarm system is connected to a monitoring facility, the manual fire alarm box required by 13.7.1.4.7.5 should be connected to a separate circuit that is not placed "on test" when the detection or sprinkler system is placed "on test." The manual fire alarm box should be located in an area that is accessible to occupants of the building and should not be locked. [***101:*** A.9.6.2.5]

A.13.7.1.4.7.6 Manual fire alarm boxes can include those with key-operated locks for detention areas or psychiatric hospitals, manual fire alarm boxes in areas where explosive vapors or dusts might be a hazard, or manual fire alarm boxes in areas with corrosive atmospheres. The appearance of manual fire alarm boxes for special uses often differs from those used in areas of normal occupancy. Manual fire alarm boxes, such as those with locks, that are located in areas where the general public has limited access might need to have signage advising persons to seek assistance from staff in the event a fire is noted. [***101:*** A.9.6.2.6]

A.13.7.1.4.8.3 A dwelling unit is that structure, area, room, or combination of rooms, including hotel rooms/suites, in which a family or individual lives. A dwelling unit includes living areas only and not common usage areas in multifamily buildings, such as corridors, lobbies, and basements. [***101:*** A.9.6.2.9.3]

A.13.7.1.4.9.2.1 Elevator lobbies have been considered areas subject to unwanted alarms due to factors such as low ceilings and smoking. In the past several years, new features have become available to reduce this problem. These features are, however, not necessarily included in any specific installation. [***101:*** A.9.6.3.2.1]

A.13.7.1.4.9.2.2 The concept addressed is that detectors used for releasing service, such as door or damper closing and fan shutdown, are not required to sound the building alarm. [***101:*** A.9.6.3.2.2]

A.13.7.1.4.9.2.3 The concept addressed is that detectors used for releasing service, such as door or damper closing and fan shutdown, are not required to sound the building alarm. [***101:*** A.9.6.3.2.3]

A.13.7.1.4.9.6.2 To approve an evacuation plan to selectively notify building occupants, the AHJ should consider several building parameters, including building compartmentation, detection and suppression system zones, occupant loads, and the number and arrangement of the means of egress.

In high-rise buildings, it is typical to evacuate the fire floor, the floor(s) above, and the floor immediately below. Other areas are then evacuated as the fire develops. [***101:*** A.9.6.3.6.2]

A.13.7.1.4.13.2.1 The primary purpose of fire alarm system annunciation is to enable responding personnel to identify the location of a fire quickly and accurately and to indicate the status of emergency equipment or fire safety functions that might affect the safety of occupants in a fire situation. [***72:*** A.4.4.6.1.1]

A.13.7.1.4.13.2.2 Fire alarm system annunciation should, as a minimum, be sufficiently specific to identify the origin of a fire alarm signal in accordance with the following:

(1) If a floor exceeds 22,500 ft^2 (2093 m^2) in area, the floor should be subdivided into detection zones of 22,500 ft^2 (2093 m^2) or less, consistent with the existing smoke and fire barriers on the floor.

(2) If a floor exceeds 22,500 ft^2 (2093 m^2) in area and is undivided by smoke or fire barriers, detection zoning

should be determined on a case-by-case basis in consultation with the AHJ.

(3) Waterflow switches on sprinkler systems that serve multiple floors, areas exceeding 22,500 ft^2 (2093 m^2), or areas inconsistent with the established detection system zoning should be annunciated individually.

(4) In-duct smoke detectors on air-handling systems that serve multiple floors, areas exceeding 22,500 ft^2 (2093 m^2), or areas inconsistent with the established detection system zoning should be annunciated individually.

(5) If a floor area exceeds 22,500 ft^2 (2093 m^2), additional zoning should be provided. The length of any zone should not exceed 300 ft (91 m) in any direction. If the building is provided with automatic sprinklers throughout, the area of the alarm zone should be permitted to coincide with the allowable area of the sprinkler zone. [*72*: A.4.4.6.1.2]

A.13.7.2.5.3 The requirement for smoke detectors in spaces open to the corridors eliminates the requirements of 18.3.6.1(1)(c), 18.3.6.1(2)(b), and 18.3.6.1(5)(b) of NFPA *101* for direct supervision by the facility staff of nursing homes. [*101*: A.18.3.4.5.3]

A.13.7.2.7.2 Examples of contiguous common spaces are galleries and corridors. [*101*: A.22.3.4.4]

A.13.7.2.7.2.3 An open dormitory is a dormitory that is arranged to allow staff to observe the entire dormitory area at one time. [*101*: A.22.3.4.4.3]

A.13.7.2.8.2.3 An open dormitory is a dormitory that is arranged to allow staff to observe the entire dormitory area at one time. [*101*: A.23.3.4.4.3]

A.13.7.2.9.3 Caution needs to be exercised in locating smoke alarms with regard to their proximity to bathrooms, cooking facilities, and HVAC outlets in order to prevent nuisance alarms. [*101*: A.28.3.4.5]

A.13.7.2.10.2 Caution needs to be exercised in locating smoke alarms with regard to their proximity to bathrooms, cooking facilities, and HVAC outlets in order to prevent nuisance alarms. [*101*: A.29.3.4.5]

A.13.7.2.11.4 Previous editions of NFPA *101* permitted the single-station smoke alarm required by 30.3.4.5.1 of NFPA *101* to be omitted from each apartment where a complete automatic smoke detection system was installed throughout the building. With such a system, when one detector is activated, an alarm is sounded throughout the building. Experience with complete smoke detection systems in apartment buildings has shown that numerous nuisance alarms are likely to occur. Where there is a problem with frequent nuisance alarms, occupants ignore the alarm, or the system is either disconnected or otherwise rendered inoperative. [*101*: A.30.3.4.5.1]

A.13.7.2.16.1.4 Most often smoke alarms sounding an alarm at 85 dBA or greater, installed outside the bedroom area, will meet the intent of this requirement. Smoke alarms remotely located from the bedroom might not be loud enough to awaken the average person. In such cases, it is recommended that smoke alarms be interconnected so that the activation of any smoke alarm will cause all smoke alarms to activate. [*101*: A.33.2.3.4.3]

A.13.7.2.27.2.1 The need for voice communication can be based on a decision regarding staged or partial evacuation versus total evacuation of all floors. The determination of need is a function of occupancy classification and building height. [*101*: A.11.8.3.1]

A.13.7.3.2.1.3 Protected premises fire alarm systems are often installed under construction or remodeling contracts and subsequently connected to a supervising station fire alarm system under a separate contract. All contractors should complete the portions of the record of completion form for the portions of the connected systems for which they are responsible. Several partially completed forms might be accepted by the AHJ provided that all portions of the connected systems are covered in the set of forms. [*72*: A.4.5.1.3]

A.13.7.3.2.2 The requirements of Chapter 10 of *NFPA 72* should be used to perform the installation wiring and operational acceptance tests required when completing the record of completion.

The record of completion form shall be permitted to be used to record decisions reached prior to installation regarding intended system type(s), circuit designations, device types, notification appliance type, power sources, and the means of transmission to the supervising station. [*72*: A.4.5.2.1]

A.13.7.3.2.4(1) The owner's manual should include the following:

(1) A detailed narrative description of the system inputs, evacuation signaling, ancillary functions, annunciation, intended sequence of operations, expansion capability, application considerations, and limitations

(2) Operator instructions for basic system operations, including alarm acknowledgment, system reset, interpretation of system output (LEDs, CRT display, and printout), operation of manual evacuation signaling and ancillary function controls, and change of printer paper

(3) A detailed description of routine maintenance and testing as required and recommended and as would be provided under a maintenance contract, including testing and maintenance instructions for each type of device installed. This information should include the following:

   (a) Listing of the individual system components that require periodic testing and maintenance

   (b) Step-by-step instructions detailing the requisite testing and maintenance procedures, and the intervals at which these procedures shall be performed, for each type of device installed

   (c) A schedule that correlates the testing and maintenance procedures recommended by A.13.7.3.2.4(1)(3)(b) with the listing recommended by A.13.7.3.2.4(1)(3)(a)

(4) Detailed troubleshooting instructions for each trouble condition generated from the monitored field wiring, including opens, grounds, and loop failures [These instructions should include a list of all trouble signals annunciated by the system, a description of the condition(s) that causes such trouble signals, and step-by-step instructions describing how to isolate such problems and correct them (or how to call for service, as appropriate).]

(5) A service directory, including a list of names and telephone numbers of those who provide service for the system [*72*: A.4.5.2.3(1)]

A.13.7.3.2.5 Subparagraph 13.7.3.2.5 is intended to provide a basis for the AHJ to require third-party verification and certification that the AHJ and the system owner can rely on to reasonably assure that the fire alarm system installation complies with the applicable requirements. [*72*: A.4.5.2.4]

A.13.7.3.2.7 It is suggested that the annual tests be conducted in segments so that all devices are tested annually. [*72:* A.10.4.3]

A.13.7.3.3.5 Manual fire alarm boxes should be of contrasting color to the background on which they are mounted. [*72:* A.5.12.5]

A.13.7.3.3.8 It is not the intent of 13.7.3.3.8 to require manual fire alarm boxes to be attached to moveable partitions or to equipment, nor to require the installation of permanent structures for mounting purposes only. [*72:* A.5.12.8]

A.13.7.3.5.3 The alarm verification feature should not be used as a substitute for proper detector location/applications or regular system maintenance. Alarm verification features are intended to reduce the frequency of false alarms caused by transient conditions. They are not intended to compensate for design errors or lack of maintenance. [*72:* A.6.8.5.4.1]

A.13.7.3.6.5 The waterflow device should be field adjusted so that an alarm is initiated no more than 90 seconds after a sustained flow of at least 10 gpm (40 L/min).

Features that should be investigated to minimize alarm response time include the following:

(1) Elimination of trapped air in the sprinkler system piping
(2) Use of an excess pressure pump
(3) Use of pressure drop alarm-initiating devices
(4) A combination thereof

Care should be used when choosing waterflow alarm-initiating devices for hydraulically calculated looped systems and those systems using small orifice sprinklers. Such systems might incorporate a single point flow of significantly less than 10 gpm (40 L/min). In such cases, additional waterflow alarm-initiating devices or the use of pressure drop–type waterflow alarm-initiating devices might be necessary.

Care should be used when choosing waterflow alarm-initiating devices for sprinkler systems that use on–off sprinklers to ensure that an alarm is initiated in the event of a waterflow condition. On–off sprinklers open at a predetermined temperature and close when the temperature reaches a predetermined lower temperature. With certain types of fires, waterflow might occur in a series of short bursts of a duration of 10 seconds to 30 seconds each. An alarm-initiating device with retard might not detect waterflow under these conditions. An excess pressure system or a system that operates on pressure drop should be considered to facilitate waterflow detection on sprinkler systems that use on–off sprinklers.

Excess pressure systems can be used with or without alarm valves. The following is a description of one type of excess pressure system with an alarm valve.

An excess pressure system with an alarm valve consists of an excess pressure pump with pressure switches to control the operation of the pump. The inlet of the pump is connected to the supply side of the alarm valve, and the outlet is connected to the sprinkler system. The pump control pressure switch is of the differential type, maintaining the sprinkler system pressure above the main pressure by a constant amount. Another switch monitors low sprinkler system pressure to initiate a supervisory signal in the event of a failure of the pump or other malfunction. An additional pressure switch can be used to stop pump operation in the event of a deficiency in water supply. Another pressure switch is connected to the alarm outlet of the alarm valve to initiate a waterflow alarm signal when waterflow exists. This type of system also inherently prevents false alarms due to water surges. The sprinkler retard chamber should be eliminated to enhance the detection capability of the system for short duration flows. [*72:* A.5.10.2]

A.13.7.3.7 The provision of a double loop or other multiple path conductor or circuit to avoid electrical monitoring is not acceptable. [*72:* A.4.4.7.1]

A.13.7.3.7.5 *NFPA 72* does not have jurisdiction over the monitoring integrity of conductors within equipment, devices, or appliances. [*72:* A.4.4.7.1.7]

A.13.7.3.8 The term *fire alarm systems* includes all equipment, regardless of location, that requires power but does not receive all power directly from the main control unit. Examples of fire alarm equipment that require power include, but are not limited to, the following multiple control units, remote power supplies, amplifiers, transponders, and required computer equipment. [*72:* A.4.4.1.3.1]

A.13.7.4.1.2.3 The monitoring of circuit integrity relies on the interruption of the wiring continuity when the connection to the initiating device is lost. Terminals and leads, as illustrated in Figure A.13.7.4.1.2.3(a) and Figure A.13.7.4.1.2.3(b), monitor the presence of the device on the initiating device circuit. [*72:* A.5.4.6]

A.13.7.4.3.2 Figure A.13.7.4.3.2 illustrates the proper mounting placement for detectors. [*72:* A.5.6.3.1]

A.13.7.4.3.5 See Figure A.13.7.4.3.2.

A.13.7.4.3.6 Figure A.13.7.4.3.6 illustrates under-floor mounting installations. [*72:*A.5.7.3.2.2]

A.13.7.4.3.11.2 Smoke detector spacing depends on the movement of air within the room. [*72:* A.5.7.5.3.3]

A.13.7.4.7 Detectors that cause unwanted alarms should be tested at their lower listed range (or at 0.5 percent obscuration if unmarked or unknown). Detectors that activate at less than this level should be replaced. [*72:* A.10.4.3.2]

A.14.3.1(1) In existing buildings, existing walls in good repair and consisting of lath and plaster, gypsum wallboard, or masonry units can usually provide satisfactory protection for the purposes of this requirement where a 1-hour fire resistance rating is required. Further evaluation might be needed where a 2-hour fire resistance rating is required. Additional guidelines can be found in Appendix D of NFPA 914, *Code for Fire Protection of Historic Structures*, and in the *SFPE Handbook of Fire Protection Engineering*. [*101:* A.7.1.3.2.1(1)]

A.14.3.1(2) In existing buildings, existing walls in good repair and consisting of lath and plaster, gypsum wallboard, or masonry units can usually provide satisfactory protection for the purposes of this requirement where a 1-hour fire resistance rating is required. Further evaluation might be needed where a 2-hour fire resistance rating is required. Additional guidelines can be found in Appendix D of NFPA 914 and in the *SFPE Handbook of Fire Protection Engineering*. [*101:* A.7.1.3.2.1(2)]

A.14.3.1(5) Means of egress from the level of exit discharge is permitted to pass through an exit stair enclosure or exit passageway serving other floors. Doors for convenience purposes and unrelated to egress also are permitted to provide access to and from exit stair enclosures and exit passageways, provided that such doors are from corridors or normally occupied spaces.

It is also the intent of this provision to prohibit exit enclosure windows, other than approved vision panels in doors, that are not mounted in an exterior wall. [*101:* A.7.1.3.2.1(5)]

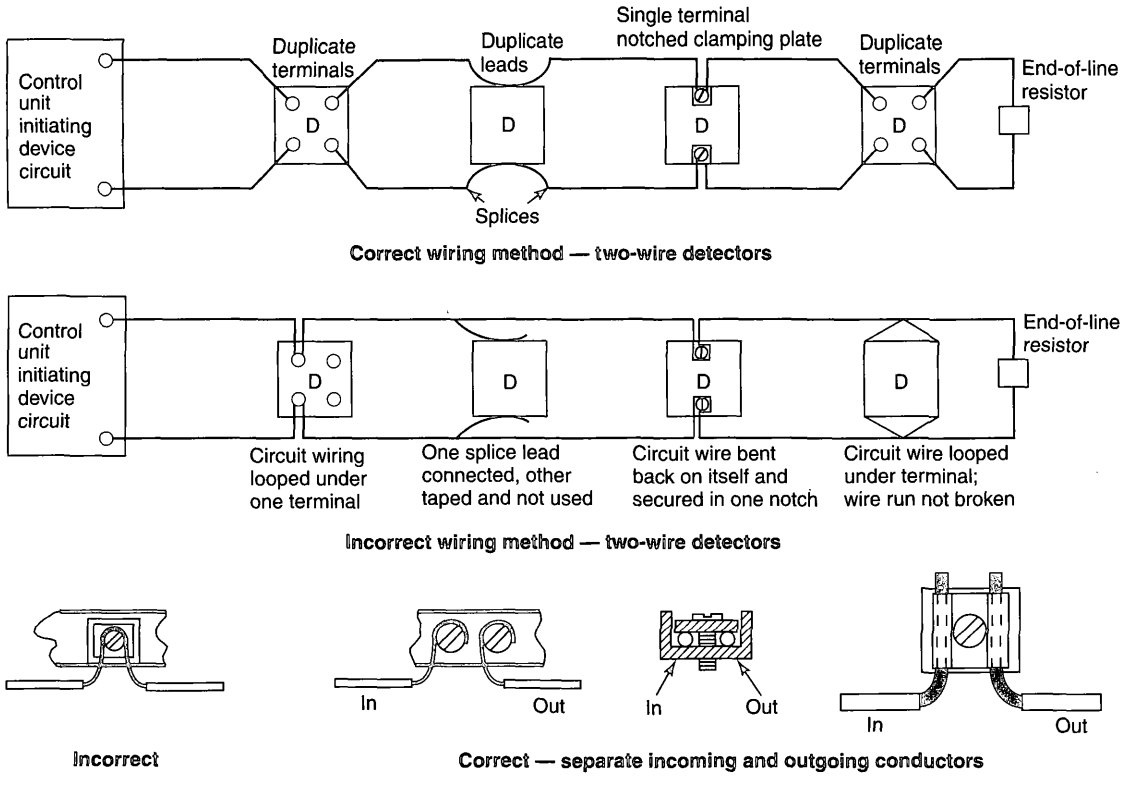

FIGURE A.13.7.4.1.2.3(a) Correct (and Incorrect) Wiring Methods. [72:Figure A.5.4.6(a)]

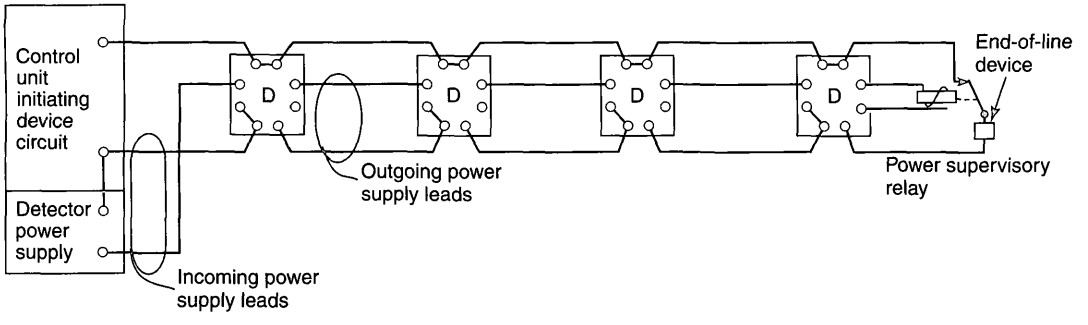

Illustrates four-wire smoke detector employing a three-wire connecting arrangement. One side of power supply is connected to one side of initiating device circuit. Wire run broken at each connection to smoke detector to provide supervision.

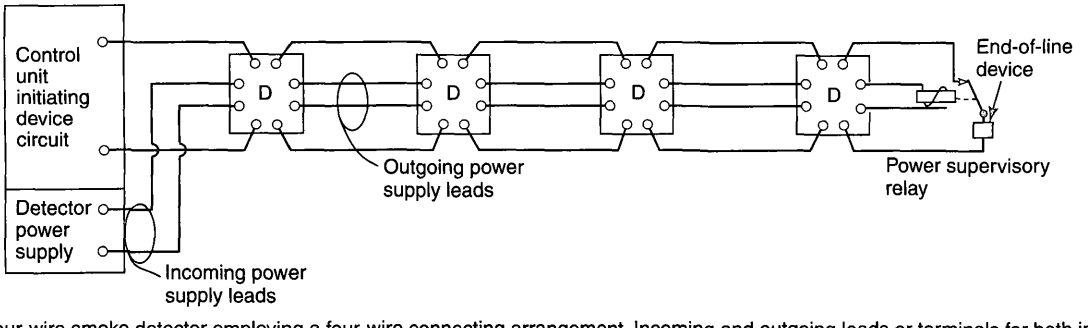

Illustrates four-wire smoke detector employing a four-wire connecting arrangement. Incoming and outgoing leads or terminals for both initiating device and power supply connections. Wire run broken at each connection to provide supervision.

D = Detector

FIGURE A.13.7.4.1.2.3(b) Wiring Arrangements for Four-Wire Detectors. [72:Figure A.5.4.6(b)]

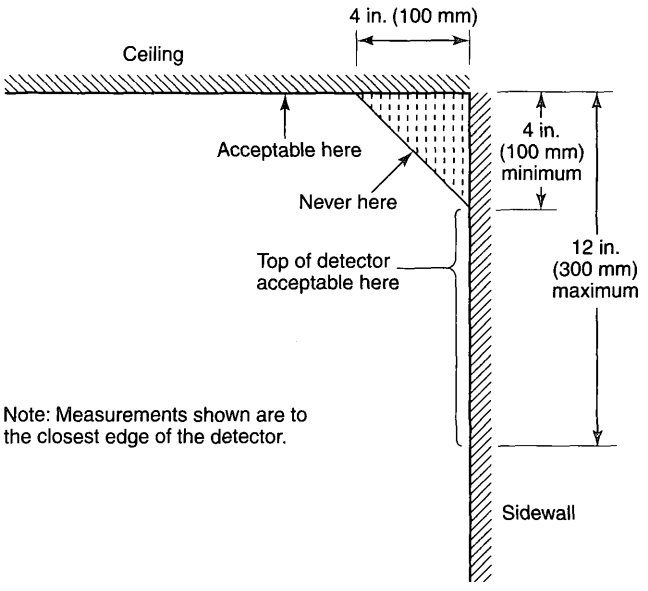

FIGURE A.13.7.4.3.2 Example of Proper Mounting for Detectors. [72:Figure A.5.6.3.1]

A.14.3.1(6)(b) Penetrations for electrical wiring are permitted where the wiring serves equipment permitted by the AHJ to be located within the exit enclosure, such as security systems, public address systems, and fire department emergency communications devices. [*101*: A.7.1.3.2.1(6)(b)]

A.14.3.3 This provision prohibits the use of exit enclosures for storage or for installation of equipment not necessary for safety. Occupancy is prohibited other than for egress, refuge, and access. The intent is that the exit enclosure essentially be "sterile" with respect to fire safety hazards. [*101*: A.7.1.3.2.3]

A.14.4.1 A proper means of egress allows unobstructed travel at all times. Any type of barrier including, but not limited to, the accumulations of snow and ice in those climates subject to such accumulations is an impediment to free movement in the means of egress. [*101*: A.7.1.10.1]

A.14.5.1.1 Where doors are subject to two-way traffic, or where their opening can interfere with pedestrian traffic, an appropriately located vision panel can reduce the chance of accidents.

Swinging doors in horizontal- or vertical-rolling partitions complying with the following should be permitted in a means of egress where the following criteria are met:

(1) The door or doors comply with 14.5.1.
(2) The partition in which the doors are mounted complies with the applicable fire protection rating and closes upon smoke detection or power failure at a speed not exceeding 9 in./s (230 mm/s) and not less than 6 in./s (150 mm/s).
(3) The doors mounted in the partition are self-closing or automatic-closing in accordance with 14.5.4.1. [*101*: A.7.2.1.4.1]

A.14.5.1.4 The requirement of 14.5.1.4 is not intended to apply to the swing of cross-corridor doors, such as smoke barrier doors and horizontal exits. [*101*: A.7.2.1.4.4]

A.14.5.2.7 It is intended that the re-entry provisions apply only to enclosed exit stairs, not to outside stairs. This arrange-

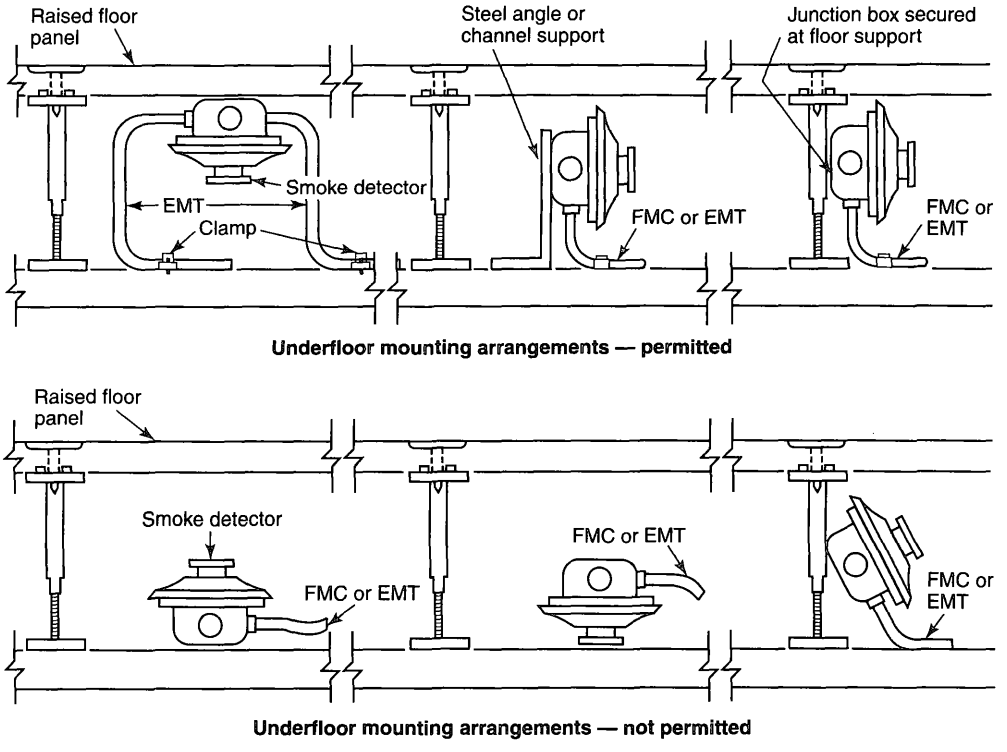

FIGURE A.13.7.4.3.6 Mounting Installations Permitted *(top)* and Not Permitted *(bottom)*. [72:Figure A.5.7.3.2.2]

ment makes it possible to leave the stairway at such floor if the fire renders the lower part of the stair unusable during egress or if the occupants seek refuge on another floor. [*101*: A.7.2.1.5.7]

A.14.5.2.9 Examples of devices that might be arranged to release latches include knobs, levers, and bars. This requirement is permitted to be satisfied by the use of conventional types of hardware, whereby the door is released by turning a lever, knob, or handle or by pushing against a bar, but not by unfamiliar methods of operation such as a blow to break glass. It is also within the intent of this requirement that switches integral to traditional door knobs, lever handles, or bars, and that interrupt the power supply to an electromagnetic lock, be permitted, provided that they are affixed to the door leaf. The operating devices should be capable of being operated with one hand and should not require tight grasping, tight pinching, or twisting of the wrist to operate. [*101*: A.7.2.1.5.9]

A.14.5.2.9.3 Examples of devices that, when used with a latch, can be arranged to require not more than one additional releasing operation include night latches, dead bolts, and security chains. [*101*: A.7.2.1.5.9.3]

A.14.5.2.11 Examples of devices prohibited by this requirement include locks, padlocks, hasps, bars, chains, or combinations thereof. [*101*: A.7.2.1.5.11]

A.14.5.3.1(4) It is not the intent to require a direct physical or electrical connection between the door release device and the lock. It is the intent to allow door movement initiated by operating the door release device required in 7.2.1.5.9 of NFPA *101* as one option to initiate the irreversible process.

Several factors need to be considered in approving an increase in delay time from 15 seconds to 30 seconds. Some of those factors include occupancy, occupant density, ceiling height, fire hazards present, fire protection features provided, and the location of the delayed-egress locks. An example of a location where the increase on delay time might not be approved is at an exit stair discharge door. [*101*: A.7.2.1.6.1(4)]

A.14.5.3.1(5) In the event that the AHJ has permitted increased operation time, the sign should reflect the appropriate time. [*101*: A.7.2.1.6.1(5)]

A.14.5.3.2 It is not the intent to require doors that restrict access but comply with 14.5.2.9 to comply with the access-controlled egress door provisions of 14.5.3.2. [*101*: A.7.2.1.6.2]

A.14.5.4.1 Examples of doors designed to normally be kept closed include those to a stair enclosure or horizontal exit. [*101*: A.7.2.1.8.1]

A.14.6.2 The purpose of this provision is to protect the exterior wall of a stairway from fires in other portions of the building. If the exterior wall of the stair is flush with the building exterior wall, the fire would need to travel around 180 degrees in order to impact the stair. This has not been a problem in existing buildings, so no protection is required. However, if the angle of exposure is less than 180 degrees, protection of either the stair wall or building wall is required.

Figure A.14.6.2(a), Figure A.14.6.2(b), and Figure A.14.6.2(c) illustrate the requirement, assuming nonrated glass on the exterior wall of the stair is used. [*101*: A.7.2.2.5.2]

A.14.6.3 An example of a use with the potential to interfere with egress is storage. [*101*: A.7.2.2.5.3]

A.14.6.4 Figure A.14.6.4 shows an example of a stairway marking sign. [*101*: A.7.2.2.5.4]

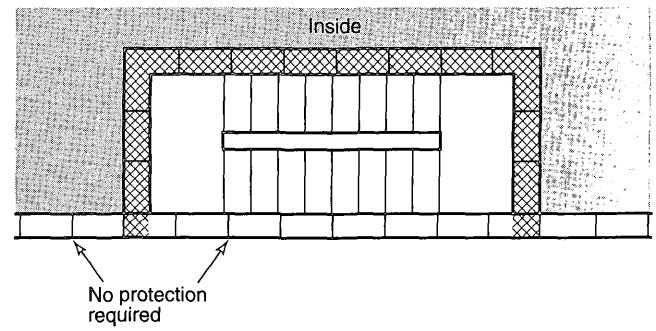

FIGURE A.14.6.2(a) Stairway with Nonrated Exterior Wall in Same Plane as Building Exterior Wall. [*101*:Figure A.7.2.2.5.2(a)]

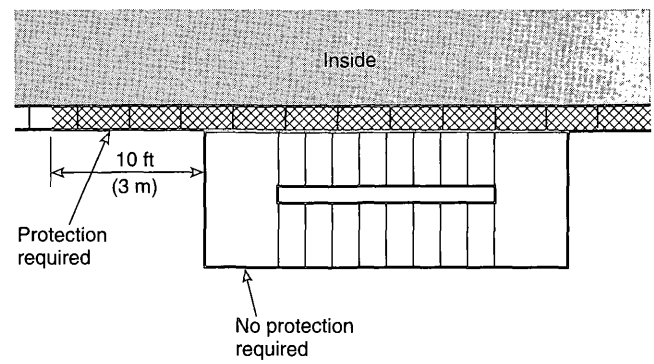

FIGURE A.14.6.2(b) Stairway with Unprotected Exterior Perimeter Protruding Past Building Exterior Wall. [*101*:Figure A.7.2.2.5.2(b)]

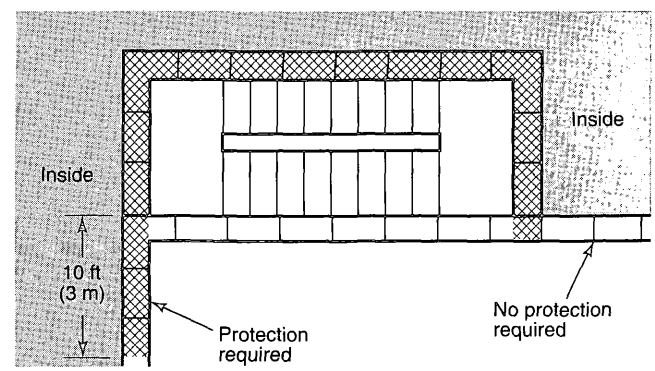

FIGURE A.14.6.2(c) Stairway with Nonrated Exterior Wall Exposed by Adjacent Exterior Wall of Building. [*101*:Figure A.7.2.2.5.2(c)]

A.14.6.4.8 For stair nosing marking, surface-applied material, such as adhesive-backed tape and magnetic strips, should not be used as it is not durable under the scuffing from users' feet and, in coming loose, it creates a tripping hazard. While a carefully applied and consistently maintained coating is acceptable, contrasting color or photoluminescent material integral with the nosings is preferable because of its permanence. See also 7.1.6.4 and 7.2.2.3.3 of NFPA *101* and for slip resistance uniformity requirements, as well as prohibition of projections on the treads.

FIGURE A.14.6.4 Example of a Stairway Marking Sign. [*101*: Figure A.7.2.2.5.4]

Guidance on the use of photoluminescent marking is provided by ASTM E 2030, *Guide for Recommended Uses of Photoluminesent (Phosphorescent) Safety Markings.* Additional marking, for example, at the side boundaries of the stair, should be applied in accordance with the guidance provided therein. If photoluminescent marking is also provided for handrails, it should be on at least the upper surface of the handrail and should extend the full length of each handrail. [*101*: A.7.2.2.5.4.8]

A.14.7 An exit passageway serves as a horizontal means of exit travel that is protected from fire in a manner similar to an enclosed interior exit stair. Where it is desired to offset exit stairs in a multistory building, an exit passageway can be used to preserve the continuity of the protected exit by connecting the bottom of one stair to the top of the stair that continues to the street floor. Probably the most important use of an exit passageway is to satisfy the requirement that at least 50 percent of the exit stairs discharge directly outside from multistory buildings *(see 7.7.2 of* NFPA *101).* Thus, if it is impractical to locate the stair on an exterior wall, an exit passageway can be connected to the bottom of the stair to convey the occupants safely to an outside exit door. In buildings of extremely large area, such as shopping malls and some factories, the exit passageway can be used to advantage where the travel distance to reach an exit would otherwise be excessive. [*101*: A.7.2.6]

A.14.7.1 Examples of building elements that might be arranged as exit passageways include hallways, corridors, passages, tunnels, underfloor passageways, or overhead passageways. [*101*: A.7.2.6.1]

A.14.7.4(1) Where an exit passageway serves occupants on the level of exit discharge as well as other floors, it should not be required that the occupant loads be added, thus increasing the width of the exit passageway. The situation is the same as that in which occupants from the level of exit discharge join occupants from upper floors for a few feet of horizontal travel through a stair enclosure. [*101*: A.7.2.6.4(1)]

A.14.8.1.2 The normal occupant load is not necessarily a suitable criterion, because the greatest hazard can occur when an unusually large crowd is present, which is a condition often difficult for AHJs to control by regulatory measures. The principle of this *Code* is to provide means of egress for the maximum probable number of occupants, rather than to attempt to limit occupants to a number commensurate with available means of egress. However, limits of occupancy are specified in certain special cases for other reasons.

Suggested occupant load factors for components of large airport terminal buildings are given in Table A.14.8.1.2. However, the AHJ might elect to use different occupant load factors, provided that egress requirements are satisfied.

Table A.14.8.1.2 Airport Terminal Occupant Load Factors

Airport Terminal Area	ft^2 (gross)	m^2 (gross)
Concourse	100	9.3
Waiting areas	15	1.4
Baggage claim	20	1.9
Baggage handling	300	27.9

[*101*:Table A.7.3.1.2]

The figure used in determining the occupancy load for mall shopping centers of varying sizes was arrived at empirically by surveying over 270 mall shopping centers, by studying mercantile occupancy parking requirements, and by observing the number of occupants per vehicle during peak seasons.

These studies show that, with an increase in shopping center size, there is a decrease in the number of occupants per square foot of gross leasable area.

This phenomenon is explained when one considers that, above a certain shopping center gross leasable area [approximately 600,000 ft^2 (56,000 m^2)], there exists a multiplicity of the same types of stores. The purpose of duplicate types of stores is to increase the choices available to a customer for any given type of merchandise. Therefore, when shopping center size increases, the occupant load increases as well, but at a declining rate. In using Table A.14.8.1.2, the occupant load factor is applied only to the gross leasable area that uses the mall as a means of egress. [*101*: A.7.3.1.2]

A.14.8.3.3.1.1 The criteria of 14.8.3.3.1.1 provide for minimum widths for small spaces such as individual offices. The intent is that these reductions in required width apply to spaces formed by furniture and movable walls so that accommodations can easily be made for mobility-impaired individuals. One side of a path could be a fixed wall, provided that the other side is movable. This does not exempt the door widths or widths of fixed-wall corridors, regardless of the number of people or length.

Figure A.14.8.3.3.1.1(a) and Figure A.14.8.3.3.1.1(b) present selected anthropometric data for adults. The male and female figures depicted in the figures are average, 50th percentile, in size. Some dimensions apply to very large, 97.5 percentile, adults (noted as 97.5 P). [*101*: A.7.3.4.1.1]

A.14.10.1.1.1 See A.14.10.1.5. [*101*: A.7.5.1.1.1]

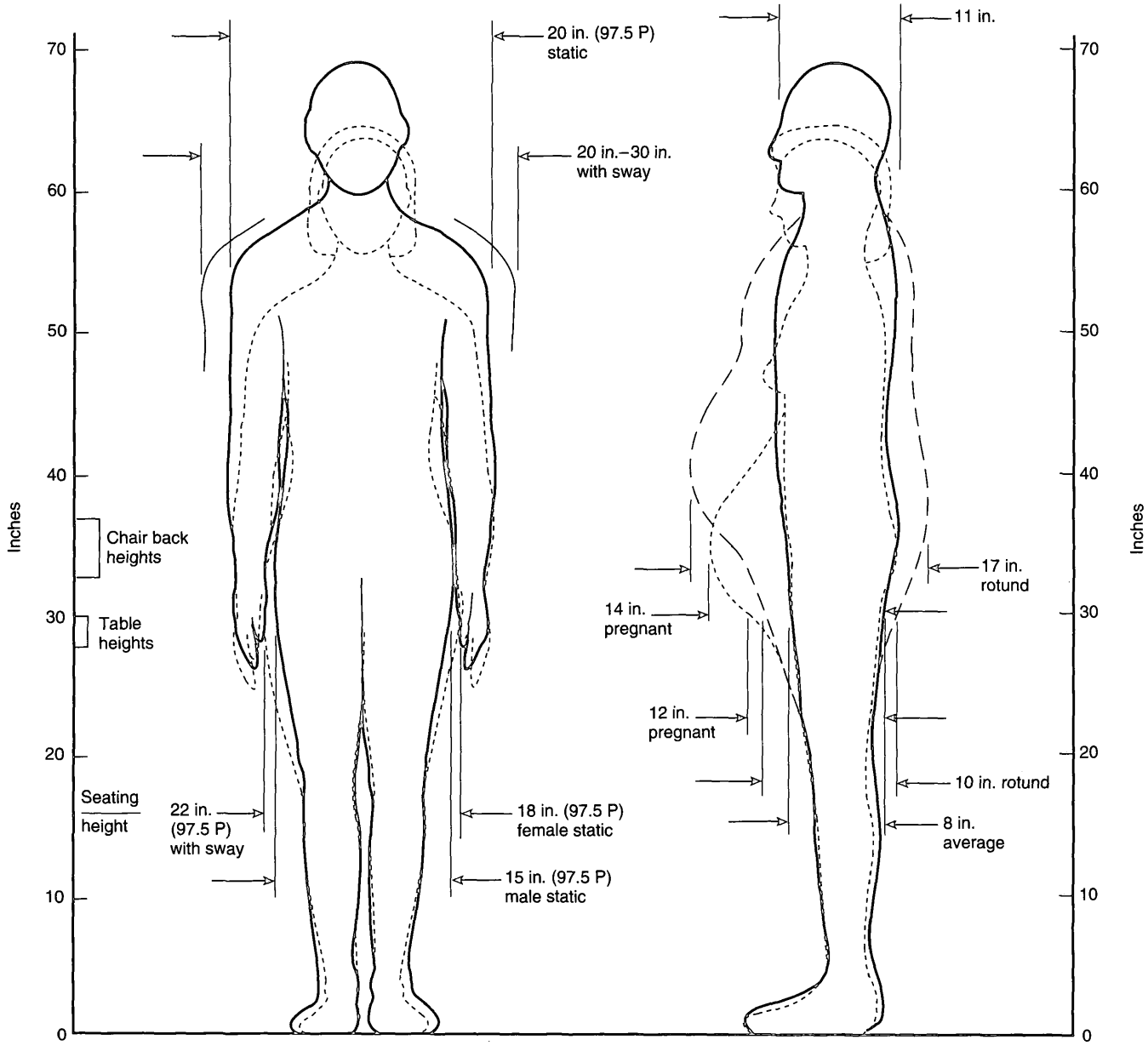

FIGURE A.14.8.3.3.1.1(a) Anthropometric Data (in in.) for Adults; Males and Females of Average, 50th Percentile, Size; Some Dimensions Apply to Very Large, 97.5 Percentile (97.5 P), Adults. [*101*:Figure A.7.3.4.1.1(a)]

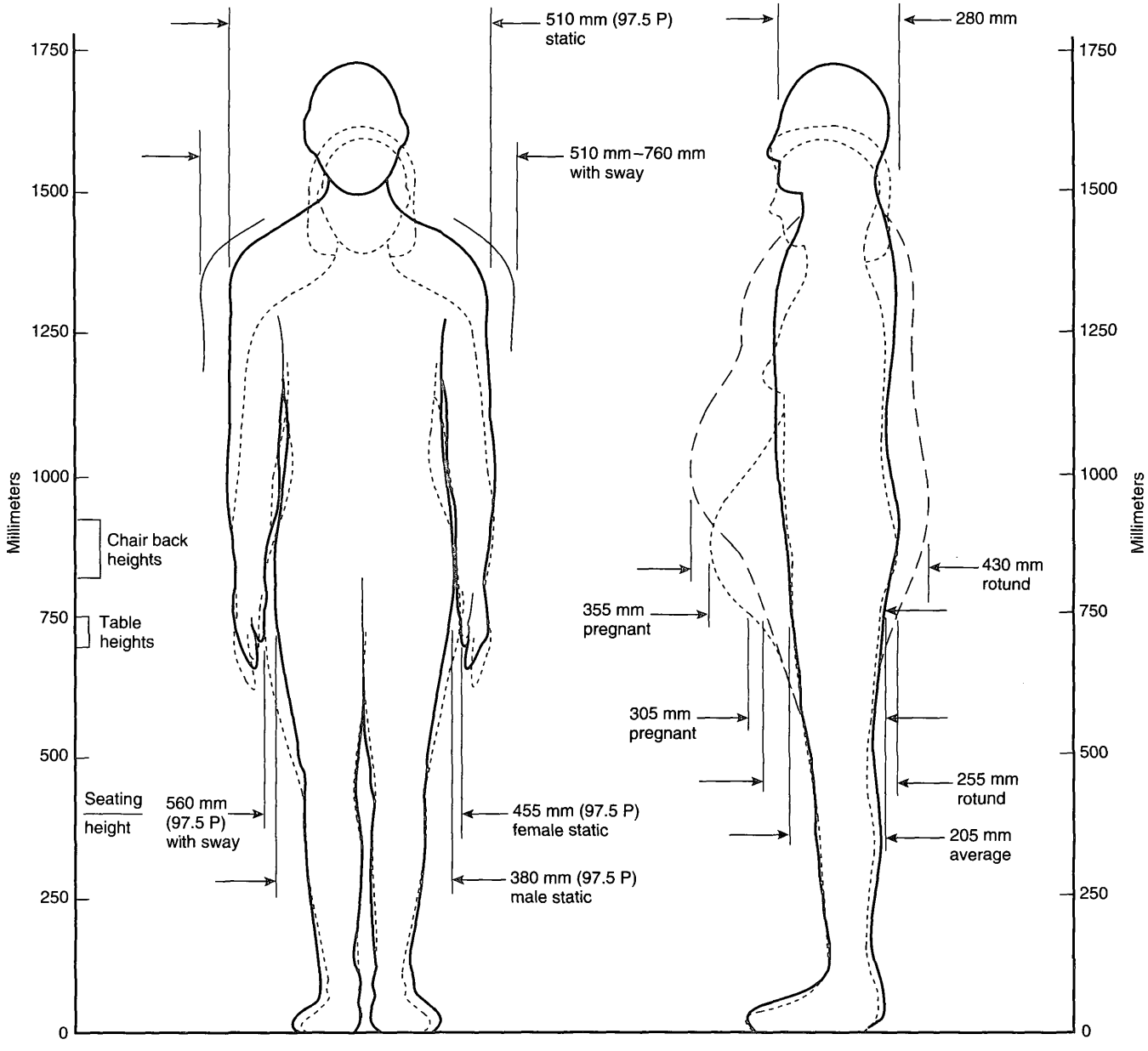

FIGURE A.14.8.3.3.1.1(b) Anthropometric Data (in mm) for Adults; Males and Females of Average, 50th Percentile, Size; Some Dimensions Apply to Very Large, 97.5 Percentile (97.5 P), Adults. [*101*:Figure A.7.3.4.1.1(b)]

A.14.10.1.3.2 Figure A.14.10.1.3.2(a) through Figure A.14.10.1.3.2(e) illustrate the method of measurement intended by 14.10.1.3.2. [*101*: A.7.5.1.3.2]

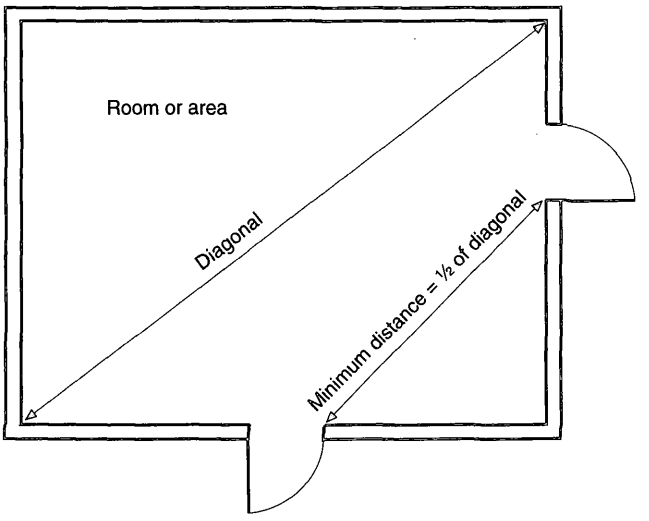

FIGURE A.14.10.1.3.2(a) Diagonal Rule for Exit Remoteness. [*101*:Figure A.7.5.1.3.2(a)]

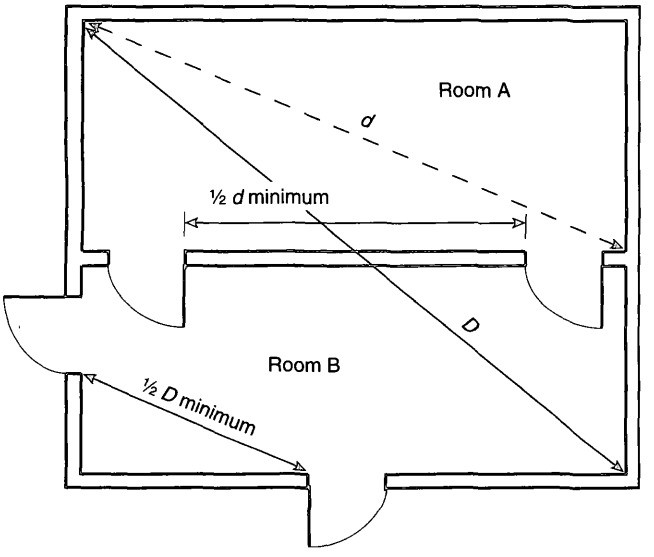

FIGURE A.14.10.1.3.2(b) Diagonal Rule for Exit and Exit Access Remoteness. [*101*:Figure A.7.5.1.3.2(b)]

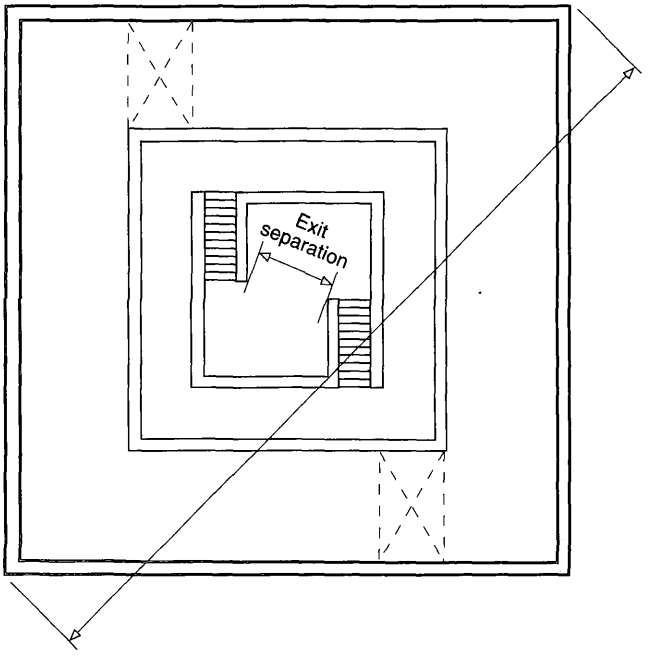

FIGURE A.14.10.1.3.2(c) Exit Separation and Diagonal Measurement of Area Served. [*101*:Figure A.7.5.1.3.2(c)]

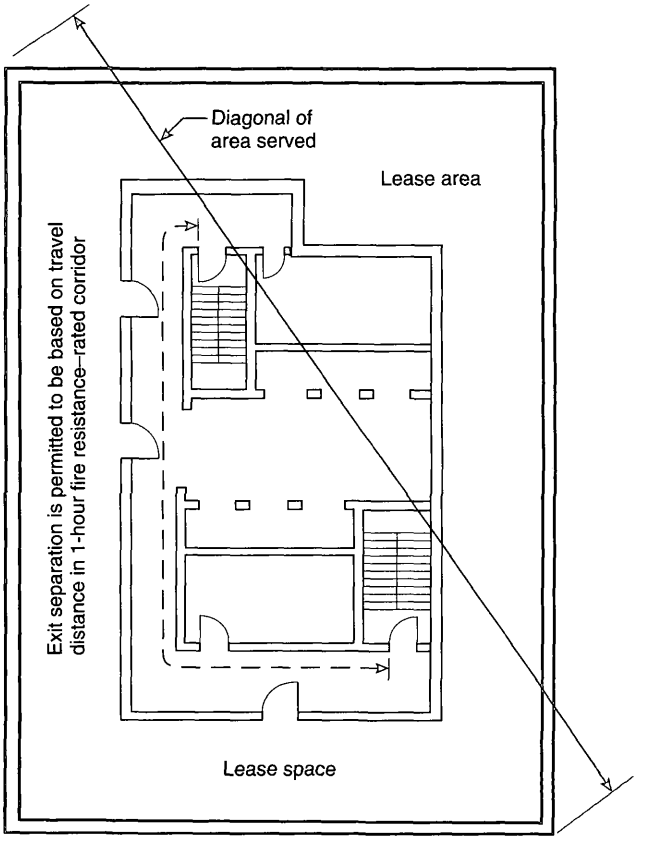

FIGURE A.14.10.1.3.2(d) Exit Separation Measured Along Corridor Path. [*101*:Figure A.7.5.1.3.2(d)]

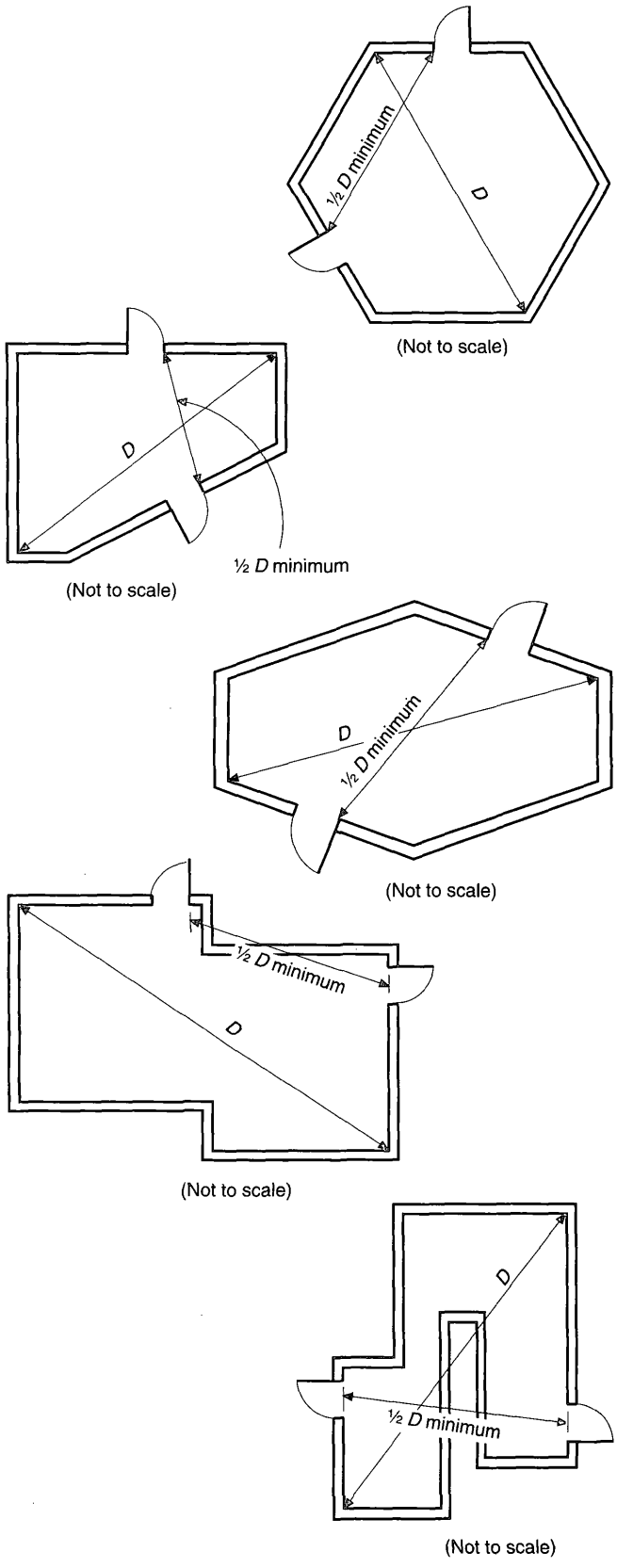

FIGURE A.14.10.1.3.2(e) Diagonal Measurement for Unusually Shaped Areas. [*101*:Figure A.7.5.1.3.2(e)]

A.14.10.1.4.2 It is difficult in actual practice to construct scissor stairs so that products of combustion that have entered one stairway do not penetrate into the other. Their use as separate required exits is discouraged. The term *limited-combustible* is intentionally not included in 14.10.1.4.2. The user's attention is directed to the definitions of *limited-combustible* and *noncombustible* in 3.3.147 and 3.3.156.9, respectively. [***101***: A.7.5.1.4.2]

A.14.10.1.5 The terms *dead end* and *common path of travel* are commonly used interchangeably. Although the concepts of each are similar in practice, they are two different concepts.

A common path of travel exists where a space is arranged so that occupants within that space are able to travel in only one direction to reach any of the exits or to reach the point at which the occupants have the choice of two paths of travel to remote exits. Part (a) of Figure A.14.10.1.5 is an example of a common path of travel.

While a dead end is similar to a common path of travel, a dead end can exist where there is no path of travel from an occupied space but can also exist where an occupant enters a corridor thinking there is an exit at the end and, finding none, is forced to retrace his or her path to reach a choice of

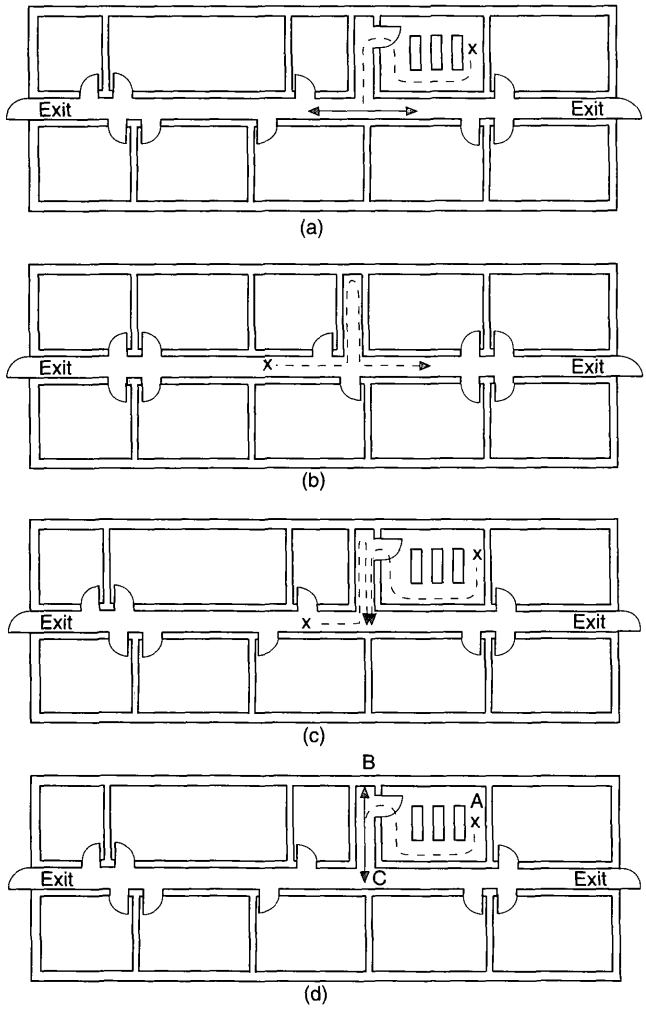

FIGURE A.14.10.1.5 Common Paths of Travel and Dead-End Corridors. [*101*:Figure A.7.5.1.5]

exits. Part (b) of Figure A.14.10.1.5 is an example of such a dead-end arrangement.

Combining the two concepts, Part (c) of Figure A.14.10.1.5 is an example of a combined dead-end/common path of travel problem.

Common paths of travel and dead-end travel are measured using the same principles used to measure travel distance as described in Section 7.6 of NFPA *101*. Starting in the room shown in Part (d) of Figure A.14.10.1.5, measurement is made from the most remote point in the room, A, along the natural path of travel, and through the doorway along the centerline of the corridor to point C, located at the centerline of the corridor, which then provides the choice of two different paths to remote exits; this is common path of travel. The space between point B and point C is a dead end. *(See 3.3.57 for the definition of common path of travel.)* [***101***: A.7.5.1.5]

A.14.10.2.1 It is not the intent that an area with equipment such as a beverage brewpot, microwave oven, and a toaster be considered a kitchen. [***101***: A.7.5.2.1]

A.14.10.2.2 Doors that lead through wall paneling, and that harmonize in appearance with the rest of the wall to avoid detracting from some desired aesthetic or decorative effect, are not acceptable, because casual occupants might not be aware of such means of egress even though it is visible. [***101***: A.7.5.2.2]

A.14.10.4.1 An accessible means of egress should comply with the accessible route requirements of ICC/ANSI A117.1, *American National Standard for Accessible and Usable Buildings and Facilities.* [***101***: A.7.5.4.1]

A.14.11.1 An exit from the upper stories in which the direction of egress travel is generally downward should not be arranged so that it is necessary to change to travel in an upward direction at any point before discharging to the outside. A similar prohibition of reversal of the vertical component of travel should be applied to exits from stories below the floor of exit discharge. However, an exception is permitted in the case of stairs used in connection with overhead or underfloor exit passageways that serve the street floor only.

It is important that ample roadways be available from buildings in which there are large numbers of occupants so that exits will not be blocked by persons already outside. Two or more avenues of departure should be available for all but very small places. Location of a larger theater — for example, on a narrow dead-end street — might be prohibited by the AHJ under this rule, unless some alternate way of travel to another street is available.

Exterior walking surfaces within the exit discharge are not required to be paved and often are provided by grass or similar surfaces. Where discharging exits into yards, across lawns, or onto similar surfaces, in addition to providing the required width to allow all occupants safe access to a public way, such access also is required to meet the following:

(1) Provisions of 7.1.7 of NFPA *101* with respect to changes in elevation
(2) Provisions of 7.2.2 of NFPA *101* for stairs, as applicable
(3) Provisions of 7.2.5 of NFPA *101* for ramps, as applicable
(4) Provisions of 7.1.10 of NFPA *101* with respect to maintaining the means of egress free of obstructions that would prevent its use, such as snow and the need for its removal in some climates [***101***: A.7.7.1]

A.14.12.1.1 Illumination provided outside the building should be to either a public way or a distance away from the building that is considered safe, whichever is closest to the building being evacuated. [***101***: A.7.8.1.1]

A.14.12.1.3 A desirable form of means of egress lighting is by lights recessed in walls about 12 in. (305 mm) above the floor. Such lights are not likely to be obscured by smoke. [***101***: A.7.8.1.3]

A.14.12.1.3(4) Some processes, such as manufacturing or handling of photosensitive materials, cannot be performed in areas provided with the minimum specified lighting levels. The use of spaces with lighting levels below 1 ft-candle (10.8 lux) might necessitate additional safety measures, such as written emergency plans, training of new employees in emergency evacuation procedures, and periodic fire drills. [***101***: A.7.8.1.3(4)]

A.14.12.1.4 An example of the failure of any single lighting unit is the burning out of an electric bulb. [***101***: A.7.8.1.4]

A.14.12.2.1 An example of a power source with reasonably ensured reliability is a public utility electric service. [***101***: A.7.8.2.1]

A.14.13.1.1 Emergency lighting outside the building should provide illumination to either a public way or a distance away from the building that is considered safe, whichever is closest to the building being evacuated. [***101***: A.7.9.1.1]

A.14.14.1.2 Where a main entrance serves also as an exit, it will usually be sufficiently obvious to occupants so that no exit sign is needed.

The character of the occupancy has a practical effect on the need for signs. In any assembly occupancy, hotel, department store, or other building subject to transient occupancy, the need for signs will be greater than in a building subject to permanent or semipermanent occupancy by the same people, such as an apartment house where the residents are presumed to be familiar with exit facilities by reason of regular use thereof. Even in a permanent residence-type building, however, there is need for signs to identify exit facilities such as outside stairs that are not subject to regular use during the normal occupancy of the building.

There are many types of situations where the actual need for signs is debatable. In cases of doubt, however, it is desirable to be on the safe side by providing signs, particularly because posting signs does not ordinarily involve any material expense or inconvenience.

The requirement for the locations of exit signs visible from any direction of exit access is illustrated in Figure A.14.14.1.2. [***101***: A.7.10.1.2]

A.14.14.1.5.2 For externally illuminated signs in accordance with 14.14.6 and internally illuminated signs listed without a viewing distance, the rated viewing distance should be considered to be 100 ft (30 m). However, placing signs to meet the 100 ft (30 m) viewing distance in other than exit access corridors might create operating difficulties or encourage placement of a sign above the line of sight. To resolve the viewing distance versus placement issue, consideration should be given to increasing the level of illumination and the size of the exit legend to the viewing distance proportionally, if signs are placed at greater distances. [***101***: A.7.10.1.5.2]

A.14.14.1.6 See A.7.10.3 of NFPA *101*. [***101***: A.7.10.1.6]

A.14.14.1.7 See 3.3.126.2 of NFPA *101* for the definition of *internally illuminated.* [***101***: A.7.10.1.7]

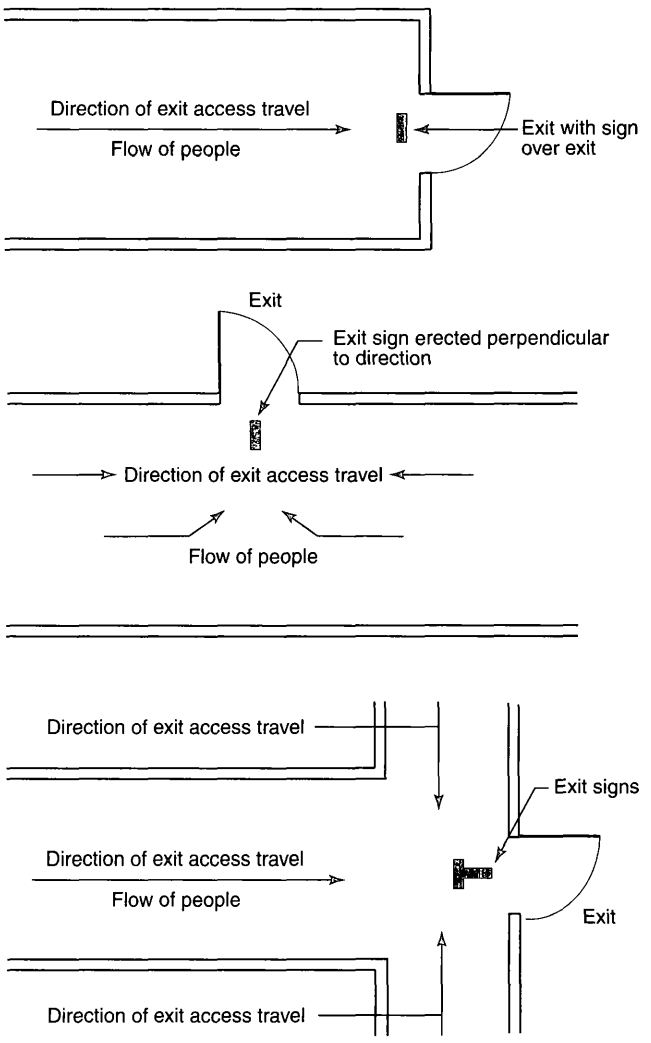

FIGURE A.14.14.1.2 Location of Exit Signs. [*101*:Figure A.7.10.1.2]

A.14.14.1.8 In stores, for example, an otherwise adequate exit sign could be rendered inconspicuous by a high-intensity illuminated advertising sign located in the immediate vicinity.

Red is the traditional color for exit signs and is required by law in many places. However, at an early stage in the development of the NFPA *101*, a provision made green the color for exit signs, following the concept of traffic lights in which green indicates safety and red is the signal to stop. During the period when green signs were specified by NFPA *101*, many such signs were installed, but the traditional red signs also remained. In 1949, the Fire Marshals Association of North America voted to request that red be restored as the required exit sign color, because it was found that the provision for green involved difficulties in law enactment that were out of proportion to the importance of safety. Accordingly, the 10th edition of NFPA *101* specified red where not otherwise required by law. The present text avoids any specific requirement for color on the assumption that either red or green will be used in most cases and that there are some situations in which a color other than red or green could actually provide better visibility. [***101***: A.7.10.1.8]

A.14.14.2 A sign complying with 14.14.2 and indicating the direction of the nearest approved exit should be placed at the point of entrance to any escalator or moving walk. *(See A.14.14.3.)* [***101***: A.7.10.2]

A.14.14.3 Where graphics are used, the symbols provided in NFPA 170, *Standard for Fire Safety Symbols*, should be used. Such signs need to provide equal visibility and illumination and are to comply with the other requirements of Section 7.10 of NFPA *101*. [***101***: A.7.10.3]

A.14.14.3.2 Pictograms are permitted to be used in lieu of, or in addition to, signs with text. [***101***: A.7.10.3.2]

A.14.14.4 It is not the intent of this paragraph to require emergency lighting but only to have the sign illuminated by emergency lighting if emergency lighting is required and provided.

It is not the intent to require that the entire stroke width and entire stroke height of all letters comprising the word EXIT be visible per the requirements of 7.10.6.3 of NFPA *101* under normal or emergency lighting operation, provided that the sign is visible and legible at a 100 ft (30 m) distance under all room illumination conditions. [***101***: A.7.10.4]

A.14.14.5.1 See A.7.8.1.3(4) of NFPA *101*. [***101***: A.7.10.5.1]

A.14.14.5.2 It is the intent to prohibit a freely accessible light switch to control the illumination of either an internally or externally illuminated exit sign. [***101***: A.7.10.5.2]

A.14.14.5.2.2 The flashing repetition rate should be approximately one cycle per second, and the duration of the off-time should not exceed ¼ second per cycle. During on-time, the illumination levels need to be provided in accordance with 7.10.6.3 of NFPA *101*. Flashing signs, when activated with the fire alarm system, might be of assistance. [***101***: A.7.10.5.2.2]

A.14.14.6.1 Experience has shown that the word EXIT, or other appropriate wording, is plainly legible at 100 ft (30 m) if the letters are as large as specified in 14.14.6.1. [***101***: A.7.10.6.1]

A.14.14.6.2 Figure A.14.14.6.2 shows examples of acceptable locations of directional indicators with regard to left and right orientation. Directional indicators are permitted to be placed under the horizontal stroke of the letter T, provided that spacing of not less than ⅜ in. (9.5 mm) is maintained from the horizontal and vertical strokes of the letter T. [***101***: A.7.10.6.2]

EXIT>
<EXIT
<EXIT>

FIGURE A.14.14.6.2 Directional Indicators. [*101*:Figure A.7.10.6.2]

A.14.14.6.3 Colors providing a good contrast are red or green letters on matte white background. Glossy background and glossy letter colors should be avoided.

The average luminance of the letters and background is measured in footlamberts or candela per square meter. The contrast ratio is computed from these measurements by the following formula:

$$\text{Contrast} = \frac{L_g - L_e}{L_g}$$

Where L_g is the greater luminance and L_e is the lesser luminance, either the variable L_g or L_e is permitted to represent the letters, and the remaining variable will represent the background. The average luminance of the letters and background can be computed by measuring the luminance at the positions indicated in Figure A.14.14.6.3 by numbered spots. [*101*: A.7.10.6.3]

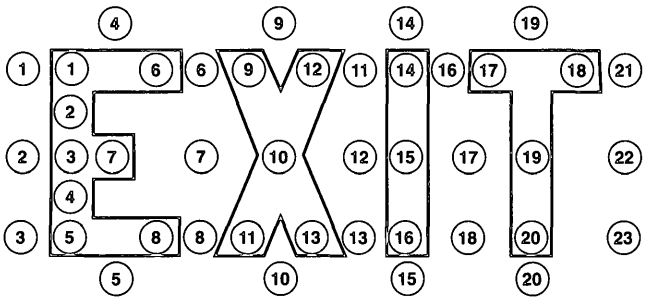

FIGURE A.14.14.6.3 Measurement of Exit Sign Luminance. [*101*:Figure A.7.10.6.3]

A.14.14.6.4.2 Photoluminescent signs need a specific minimum level of light on the face of the sign to ensure that the sign is charged for emergency operation and legibility in both the normal and emergency modes. Additionally, the type of light source (for example, incandescent, fluorescent, halogen, metal halide) is important. Each light source produces different types of visible and invisible light (for example, UV) that might affect the ability of some photoluminescent signs to charge and might also affect the amount of light output available during emergency mode. This type of sign would not be suitable where the illumination levels are permitted to decline. The charging light source should not be connected to automatic timers, because the continuous illumination of the sign is needed; otherwise, the sign illumination would not be available, because it would be discharged. [*101*: A.7.10.7.2]

A.14.14.6.5.3 The likelihood of occupants mistaking passageways or stairways that lead to dead-end spaces for exit doors and becoming trapped governs the need for exit signs. Thus, such areas should be marked with a sign that reads as follows:

NO EXIT

Supplementary identification indicating the character of the area, such as TO BASEMENT, STOREROOM, LINEN CLOSET, or the like, is permitted to be provided. [*101*: A.7.10.8.3]

A.16.1.3 See also NFPA 241. [*101*:4.6.10.2]

A.16.2.1.5 This can necessitate the removal of the heater prior to refueling. The appliance also should be allowed to cool prior to refueling. [241: A.5.2.5]

A.16.2.1.8 Misuse of temporary heating devices has resulted in numerous fires and millions of dollars in property loss. Temporary heating equipment, while operating, should be visually inspected every hour to ensure that combustibles have not blown or fallen over near the temporary heating device. During windy periods, it might be necessary to reduce the interval between inspections. Any object near the temporary heating device that is hot to the touch should be moved, or the temporary heating device should be relocated. The visual inspection also should ensure that the appliance is operating properly. Any appliance that is not operating properly should be turned off until repairs have been made. [241: A.5.2.8]

A.16.2.2.1 Failure to remove scrap and trash accumulations provides fuel for the rapid expansion of a fire that might otherwise be confined to a small area. These accumulations also provide a convenient fuel source for malicious fires. [241: A.5.4.1]

A.16.2.2.4 An approved safety plan should include the following:

(1) A fire watch should be in accordance with Section 5.1 of NFPA 241.
(2) Adequate fire protection should include sprinklers, hose, extinguishers, or barriers as needed for the particular hazard present, including the construction of the chute.
(3) Protection of openings in exterior walls and protection of combustible exterior building surfaces should be adjacent to the chute.
(4) At the end of each work day, provisions should be made to assure that exposure fires are minimized. *(See 5.4.1 of NFPA 241.)*
(5) Trash chutes used in the interior of a building should be of noncombustible construction.
(6) Trash chutes used on the exterior of a building should be of noncombustible construction, or protected if of combustible construction.
(7) The main artery of the chute should be as straight as practical to avoid accumulations or clogging within the chute. [241: A.5.4.4]

A.16.2.3.1.2 The reference to "structure" is intended to apply to those structures under construction, alteration, or demolition and not to temporary structures on the construction site. Additionally, existing properly protected storage within 50 ft (15 m) of the structure or inside an existing structure under alteration is not intended to be regulated by this provision. [241: A.5.5.1.2]

A.16.2.3.2.4 The vapors given off by flammable liquids generally have vapor densities greater than those of air. Therefore, these vapors tend to collect in low spots and travel at floor level. Being invisible, these vapors are difficult to detect without the aid of proper instruments designed specifically for the purpose.

Proper ventilation is, therefore, important in the prevention of accidental ignition of these vapors. Proper ventilation can be accomplished by either natural or mechanical means. [241: A.5.5.2.4]

A.16.3.2.1 One person should be made responsible for the protection of property from fire. This person should ensure that the proper procedures for controlling fire hazards are established and should have full authority to enforce them.

The responsible person should be appointed by the owner. Where an entirely new structure is being constructed, the owner should ensure that specifications for new buildings contain a clause stating that the "contractor will take all reasonable precautions against fire in accordance with good fire protection engineering practice."

The responsibility for loss prevention is the owner's. However, loss prevention recommendations normally are accomplished by

the contractor. To ensure that recommendations are carried out promptly, the owner's assistance might be needed.

Fire prevention education should be a topic at contractor safety meetings ("tailgate talks") at least once a month. Topics that could be discussed include maintaining clear access to fire-fighting equipment, reinforcing cutting and welding procedures, flammable liquids use and storage, use of first aid fire-fighting equipment, roofing operations, and precautions for the use of temporary heating equipment.

All fires should be investigated by the manager, and necessary fire prevention improvements that are identified by the investigation should be communicated to all employees as soon as possible. [**241:** A.7.2.1]

A.16.3.2.3 Large-scale construction sites change rapidly as construction progresses. The prefire plan should be flexible to allow for different stages of construction. Critical stages that should be considered include access, installation of water mains and fire hydrants, framing/exterior shell, roofing, covering of interior partitions, installation of fixed fire protection, concrete form work, installation of building systems, and construction safety hazards.

Since construction projects do change, the local fire department should be encouraged to visit the site on a regular basis. Prefire plan visits should be scheduled by the manager at least semiannually and when there have been major revisions to the fire prevention plan. Since municipal fire departments work rotating shifts, a series of prefire plan visits might be necessary to allow all responding fire fighters an opportunity to visit the site. In rural areas and smaller cities, the local fire department might be a volunteer organization or might have only a small career fire fighter crew on duty during the day. It might be necessary for the manager to schedule the prefire plan visit during the evening hours to meet the needs of the local fire department. [**241:** A.7.2.3]

A.16.3.2.4.5 See NFPA *101* for impairments to fire protection systems or fire alarm, detection, or communication systems where required by that code. In addition, see *NFPA 72* for impairments resulting to fire alarm equipment, and NFPA 25 for impairments resulting to water-based fire protection equipment. [**241:** A.7.2.4.5]

A.16.3.2.5.1 Due to the growing threat of arson, guard service should be provided on major projects even where not required by the AHJ. The requirements for guard service also should be based on, but should not be limited to, the hazards at the site, the size of the risk, the difficulty of the fire-fighting situation, the exposure risk, and the physical security of the site. [**241:** A.7.2.5.1]

A.16.3.2.5.2 It is recommended that areas in buildings should be patrolled at all times when construction, alteration, and demolition operations are not in progress by a competent guard registered on an approved security tour supervision system (watch clock) with stations covering all parts of the building in accordance with NFPA 601, *Standard for Security Services in Fire Loss Prevention.* Guard rounds should include all parts of the buildings and outside areas where hazardous equipment or materials are located. Rounds should be conducted every ½ hour for 2 hours after suspension of work for the day and every hour thereafter during the night and nonworking days and should include tours of all accessible work areas. [**241:** A.7.2.5.2]

A.16.3.2.5.4 The requirements for security fencing should be based on, but should not be limited to, the hazards at the site, the size of the risk, the difficulty of the fire-fighting situation, the exposure risk, and the presence of guard service. [**241:** A.7.2.5.4]

A.16.3.2.5.5 Securing the openings (doors and windows) to the structure, where possible, reduces the chance of entry by unauthorized persons. This, in turn, reduces the chance of arson or accidental fires. It could, in some instances, eliminate the need for guard service or security fencing. It also helps prevent freezing or wind damage to fire protection equipment and prevents combustible material from being blown against heating devices and igniting. [**241:** A.7.2.5.5]

A.16.3.3 In large projects or tall structures, or both, the use of an audible device for an evacuation signal in case of fire or other emergency is recommended. [**241:** A.7.4]

A.16.3.6 Portable fire extinguishers, water pails, small hose lines, and 1.5 in. (38 mm) standpipe hose are considered first aid fire-fighting equipment. To be effective, first aid fire-fighting equipment should be used in the incipient stage of a fire. [**241:** A.7.7]

A.16.3.6.1 A suitable number and type of spare fire extinguishers should be provided on site for immediate replacement of discharged fire extinguishers. [**241:** A.7.7.1]

A.16.3.6.6 Clear and unobstructed access to all first aid fire-fighting equipment should be maintained. Fire-fighting equipment also should be clearly visible from surrounding areas. If visibility to first aid fire-fighting equipment is obstructed, signs in accordance with NFPA 170, *Standard for Fire Safety Symbols*, should be installed to indicate the position of the fire-fighting equipment. [**241:** A.7.7.6]

A.16.4.1 Steel scaffolding or approved fire-retardant lumber and planking should be used on both the outside and inside of the structure. Construction materials (e.g., forms, shoring, bracing, temporary stairways, platforms, tool boxes, plan boxes, solvents, paints, tarpaulins, and similar items) should be of the noncombustible, fire-retardant, safety solvent, or high flash point type, as the case necessitates. A concerted effort should be made to attain as high a level of noncombustibility of materials as possible. *(See the definition of the term "fire retardant-treated wood" in the building code.)* [**241:** A.8.2]

A.16.4.1.5 The AHJ should be contacted regarding the adequacy of water supplies for hose lines. [**241:** A.8.2.5]

A.16.4.2.4 Construction tarps would not be considered appropriate barriers or opening protectives. [**241:** A.8.6.2.4]

A.16.4.3.1.1 No minimum water supply is specified due to the wide range of construction types, sites, and sizes. However, unless combustibles are essentially nonexistent in the completed structure and occupancy, a minimum of 500 gpm (1893 L/min) should be provided. In most instances, the required supply is greater, and AHJs should be consulted. [**241:** A.8.7.2.1]

A.16.4.3.2.1 With proper scheduling and contracting, it is possible for the sprinkler installation to follow the building construction closely as it progresses. This is frequently done in multiple-story buildings to facilitate protection on the lower floors before the upper floors have been built. [**241:** A.8.7.3.1]

A.16.4.3.3.1.1 Threaded plugs should be inserted in fire department hose connections, and they should be guarded properly against physical damage. [**241:** A.8.7.4.1.1]

A.16.4.3.3.1.3 The intent of this provision is to permit the permanent standpipes to be used as temporary standpipes during construction. [241:8.7.4.1.3]

A.16.4.3.3.2.4 A substantial box, preferably of metal, in which a sufficient amount of hose to reach all parts of the floor, appropriate nozzles, spanner wrenches, and hose straps are kept should be maintained at the highest hose outlet. [241: A.8.7.4.2.4]

A.16.4.3.3.2.8 A supply of fire hose and nozzles should be ordered in advance so that it is available as soon as the standpipes are ready. Hose lines should be connected in areas where construction is in progress. [241: A.8.7.4.2.8]

A.16.7.1.6.2 Appropriate means should be provided to prevent portable fire extinguishers from damage and secured from falling when roofing operations are being conducted.

A.17.3.1 The unrestricted use of grass-, grain-, brush-, or forest-covered lands under the jurisdiction of the AHJ presents a potential hazard to life and property from fire and resulting erosion.

A.17.3.2 Possible uses include recreation (e.g., camping, hunting, hiking), construction, and seasonal habitation.

A.17.3.4.6.1 Areas for such use can include inhabited premises or designated campsites that maintain a defensible space in accordance with NFPA 1144, *Standard for Protection of Life and Property from Wildfire.*

A.17.3.4.7.1 Areas for such use can include in habited premises or designated campsites where such fires are built in a permanent barbecue, portable barbecue, outdoor fireplace, incinerator, or grill.

A.17.3.5.1.5 An emergency can include situations such as trees falling into power lines or trees' location in violation of Table 17.3.5.1.3.1.

A.18.2.2 Access control devices take many forms such as remote opening devices, card keys, key codes, keys, and so forth.

A.18.2.3.1.3 The intent of 18.2.3.1.3 is to not require fire department access roads to detached gazebos and ramadas, independent buildings associated with golf courses, parks, and similar uses such as restrooms or snack shops that are 400 ft^2 (37 m^2) or less in area, and detached equipment or storage buildings for commercial use that are 400 ft^2 (37 m^2) or less in area.

A.18.2.3.4.6.2 The design limits of fire department apparatus should take into account mutual aid companies and other response agencies that might respond to emergencies.

A.18.2.4 Fire department access roads should be kept clear of obstructions such as parked vehicles, fences and other barriers, dumpsters, and excess vegetation. However, it should be understood that a severe snowstorm can make these roads temporarily inaccessible. In many parts of the country, the annual snowfall is of such magnitude that alternative arrangements such as temporary roads over the snow accumulation could be necessary.

A.18.2.4.1.3 These obstructions include those obscuring or interfering with fire department connections to sprinkler systems or standpipe systems or both.

A.18.3.1 See Annex H for guidance determining required fire flow.

A.18.3.2 The following documents can serve as a reference for additional water supply and fire flow information. These include NFPA 1141 and NFPA 1142.

A.18.3.3 See Annex I for guidance determining number and location of fire hydrants.

A.19.2.1.2.1 Nonmetallic or plastic rubbish containers should be limited in their combustibility and should be tested for heat release with the cone calorimeter, to the recognized standard of ASTM E 1354 or NFPA 271 referred to as the Cone or Oxygen Consumption Calorimeter. The cone calorimeter test standard does not indicate the exact conditions (heat flux and orientation) needed for testing. This test is intended to give detailed information as to how the fire performance of materials perform under actual fire conditions. The value of 300 kW/m^2 for peak rate of heat release of the rubbish container material corresponds to the value that Douglas fir wood emits under the same conditions. Rubbish containers are often manufactured of polyethylene [effective heat of combustion ca. 19,000 Btu/lb (45 MJ/kg)], which releases much more heat in a fire than the typical contents of the container, much of which is paper (effective heat of combustion ca. 6400 Btu/lb (15 MJ/kg]). For comparison purposes, Table A.19.2.1.2.1 shows peak heat release rates of a series of materials (34 plastics and Douglas fir wood) at an incident heat flux of 40 kW/m^2, in the horizontal orientation and at a thickness of 0.25 in. (6 mm) [Hirschler 1992]. For further comparison, a fire test conducted with a small ignition source on a 22.4 lb polyethylene rubbish container resulted in the release of 1.34 MW within 13.35 minutes of ignition (before it had to be manually extinguished) and caused flashover in the test room. The maximum a container can release is 300 kW/m^2 or maximum heat release rate. Douglas fir has a constant of 300 kW/m^2 where polyethylene has a peak heat release rate of 1268 kW/m^2. Nonmetallic containers such as polyethylene can represent more fuel than their contents (high density polyethylene 19,994 Btu/lb versus newsprint at 8000). A detailed review of listings or approvals is advised prior to acceptance.

A.20.1.3 Where a special amusement building is installed inside another building, such as within an exhibit hall, the special amusement building requirements apply only to the special amusement building. For example, the smoke detectors required by 20.1.3.4 are not required to be connected to the building's system. Where installed in an exhibit hall, such smoke detectors are also required to comply with the provisions applicable to an exhibit. [*101*: A.12.4.7; *101*: A.13.4.7]

A.20.1.3.1 The aggregate horizontal projections of a multilevel play structure are indicative of the number of children who might be within the structure and at risk from a fire or similar emergency. The word "aggregate" is used in recognition of the fact that the platforms and tubes that make up the multilevel play structure run above each other at various levels. In calculating the area of the projections, it is important to account for all areas that might be expected to be occupied within, on top of, or beneath the components of the structure when the structure is used for its intended function. [*101*: A.12.4.7.1; *101*:13.4.7.1]

A.20.1.3.2 See A.20.1.3.1. [*101*: A.12.4.7.2; *101*: A.13.4.7.2]

A.20.1.3.7.3 Consideration should be given to the provision of directional exit marking on or adjacent to the floor. [*101*: A.12.4.7.7.3; *101*: A.13.4.7.7.3]

Table A.19.2.1.2.1 Peak Rate of Heat Release of Materials in the Cone Calorimeter at an Incident Heat Flux of 40 kW/m^2, in the Horizontal Orientation, at a Thickness of 6 mm

	Material Description	Abbreviation	Peak Rate of Heat Release (kW/m^2)
1	Polytetrafluorethylene	PTFE	14
2	Poly(vinyl chloride) flexible 1	PVC Plenum 1	43
3	Poly(vinyl chloride) flexible 2	PVC Plenum 2	64
4	Poly(vinyl chloride) flexible 3	PVC Plenum 3	87
5	Polycarbonate 1	PolyCarb 1	429
6	Poly(vinyl chloride) flexible 4	PVC Plenum 4	77
7	Chlorinated PVC	CPVC	84
8	Poly(vinyl chloride) rigid computer housing	PVC computer	175
9	Poly(vinyl chloride) flexible wire FR	PVC flex FR	92
10	Poly(vinyl chloride) rigid low smoke	PVC low smoke	111
11	Cross linked polyethylene FR	XLPE FR	192
12	Poly(vinyl chloride) flexible wire semi FR	PVC Flex semi FR	142
13	Poly(vinyl chloride) rigid window	PVC window	183
14	Poly(vinyl chloride) flexible wire non FR	PVC Flex non FR	167
15	Poly(methyl methacrylate) FR Blend	PMMA FR	176
16	Polycarbonate 2	Polycarb 2	420
17	Polyphenylene Oxide FR Blend 1	PPO/PS 1	276
18	Polyphenylene Oxide FR Blend 2	PPO/PS 2	265
19	Acrylonitrile butadiene styrene FR 1	ABS FR 1	291
20	Acrylonitrile butadiene styrene FR 2	ABS FR 2	402
21	Poly(vinyl chloride) flexible bath curtain	PVC Flex Poor	237
22	Douglas fir	D Fir	221
23	Polystyrene FR	PS FR	334
24	Polyacetal	P Acetal	360
25	Polyurethane Flexible Foam non FR	PU	710
26	Poly(methyl methacrylate)	PMMA	665
27	Polyurethane Thermoplastic	TPU	221
28	Nylon	Nylon	1313
29	Acrylonitrile butadiene styrene	ABS	944
30	Polystyrene	PS	1101
31	Styrene acrylonitrile EPDM blend	EPDM SAN	956
32	Poly(butylene terephthalate)	PBT	1314
33	Poly(ethylene terephtahalate)	PET	534
34	Polyethylene	PE	1408
35	Polypropylene	PP	1509

Source: Hirschler 1992. "Heat release from plastic materials", M.M. Hirschler, Chapter 12 a, in "Heat Release in Fire," Elsevier, London, UK, Eds. V. Babrauskas and S.J. Grayson, 1992. pp. 375–422.

A.20.1.4.2.4(5) NFPA 58, *Liquefied Petroleum Gas Code*, permits portable butane-fueled appliances in restaurants and in attended commercial food catering operations where fueled by not more than two 10 oz (0.3 kg) LP-Gas capacity, nonrefillable butane containers that have a water capacity not exceeding 1.08 lb (0.5 kg) per container. The containers are required to be directly connected to the appliance, and manifolding of containers is not permitted. Storage of cylinders is also limited to 24 containers, with an additional 24 permitted where protected by a 2-hour fire resistance–rated barrier. [***101***: A.12.7.2.4(5); ***101***: A.13.7.2.4(5)]

A.20.1.4.3(3)(a) Securely supported altar candles in churches that are well separated from any combustible material are permitted. On the other hand, lighted candles carried by children wearing cotton robes present a hazard too great to be permitted. There are many other situations of intermediate hazard where the AHJ will have to exercise judgment. [***101***: A.12.7.3(3)(a); ***101***: A.13.7.3(3)(a)]

A.20.1.4.4.2 Testing per NFPA 701, *Standard Methods of Fire Tests for Flame Propagation of Textiles and Films*, applies to textiles and films used in a hanging configuration. If the textiles are to be applied to surfaces of buildings or backing materials as interior finishes for use in buildings, they should be treated as interior wall and ceiling finishes in accordance with Section 10.2 of NFPA *101*, and they should then be tested for flame spread index and smoke developed index values in accordance with NFPA 255, *Standard Method of Test of Surface Burning Characteristics of Building Materials*, or for flame spread and flashover in accordance with NFPA 265, *Standard Methods of Fire Tests for Evaluating Room Fire Growth Contribution of Textile*

Coverings on Full Height Panels and Walls. Films and other materials used as interior finish applied to surfaces of buildings should be tested for flame spread index and smoke developed index values in accordance with NFPA 255 or for heat and smoke release and flashover in accordance with NFPA 286, *Standard Methods of Fire Tests for Evaluating Contribution of Wall and Ceiling Interior Finish to Room Fire Growth.*

The test results from NFPA 701 are suitable for classification purposes but should not be used as input into fire models, because they are not generated in units suitable for engineering calculations. [***101:*** A.10.3.1]

A.20.1.4.4.3 Christmas trees not effectively flame-retardant treated, ordinary crepe paper decorations, and pyroxylin plastic decorations might be classified as highly flammable. [***101:*** A.10.3.5]

A.20.1.4.4.6 The term *unprotected materials containing foamed plastic* is meant to include foamed plastic items covered by "thermally thin" combustible fabrics or paint. *(See A. 10.2.3.4 of* NFPA *101.)* [***101:*** A.12.7.4.3; ***101:*** A.13.7.4.3]

A.20.1.4.5.4.7.1(3) See A.12.4.1.1 and A.13.4.1.1 of NFPA *101.* [***101:*** A.12.7.5.3.7.1(3); ***101:*** A.13.7.5.3.7.1(3)]

A.20.1.4.6 The training program in crowd management should develop a clear appreciation of factors of space, energy, time, and information, as well as specific crowd management techniques such as metering. Published guidelines on these factors and techniques are found in the *SFPE Handbook of Fire Protection Engineering,* Section 3, Chapter 13. [***101:*** A.12.7.6; ***101:*** A.13.7.6]

A.20.1.4.7 Because of the variety of types of places of assembly covered in this *Code,* no general requirement for patrols or fire watchers has been included. The NFPA 102 Committee fully recognizes the importance of this feature of fire protection, however, and believes that a system of well-trained patrols or fire watchers should be maintained in every place of assembly where fire hazards might develop. Such locations would include, among others, the spaces underneath grandstands and the areas inside and outside tents and air-supported structures. The fire watchers serve to detect incipient fires and to prevent an accumulation of materials that will carry fire. The number of such watchers required will, of course, vary for the different types of assembly occupancies, depending upon the combustibility of the construction and the number of persons accommodated. Provided with an adequate supply of portable fire extinguishing equipment located at readily accessible points, such a fire watch or detail should be able to prevent small fires from reaching serious proportions. [**102:** A.9.5]

A.20.1.4.8 It is important that an adequate number of competent attendants are on duty at all times when the assembly occupancy is occupied. [***101:*** A.12.7.7; ***101:*** A.13.7.7]

A.20.1.4.8.3 It is not the intent of this provision to require an announcement in bowling alleys, cocktail lounges, restaurants, or places of worship. [***101:*** A.12.7.7.3; ***101:*** A.13.7.7.3]

A.20.2.3.2.1 The requirements are, of necessity, general in scope, as it is recognized that they apply to all types of educational occupancies as well as conditions of occupancies, such as truant schools; schools for the mentally handicapped, vision impaired, hearing impaired, and speech impaired; and public schools. It is fully recognized that no one code can meet all the conditions of the various buildings involved, and it will be necessary for site administrators to issue supplements to these requirements, but all supplements should be consistent with these requirements. [***101:*** A.14.7.2.1; ***101:*** A.15.7.2.1]

A.20.2.3.3.1 Particular attention should be given to keeping all doors unlocked; keeping doors that serve to protect the safety of paths of egress closed and under no conditions blocked open, such as doors on stairway enclosures; keeping outside stairs and fire escape stairs free from all obstructions and clear of snow and ice; and allowing no accumulation of snow or ice or materials of any kind outside exit doors that might prevent the opening of the door or interfere with rapid escape from the building.

Any condition likely to interfere with safe egress should be corrected immediately, if possible, or otherwise should be reported at once to the appropriate authorities. [***101:*** A.14.7.3.1; ***101:*** A.15.7.3.1]

A.20.2.3.4.2 See A.20.1.4.4.2.

A.20.2.3.4.3 Christmas trees not effectively flame-retardant treated, ordinary crepe paper decorations, and pyroxylin plastic decorations might be classified as highly flammable. [***101:*** A.10.3.5]

A.20.3.2.2 The purpose of this requirement is to prevent arrangements whereby a child can be trapped in a closet. It is intended that this provision be broadly interpreted by the AHJ to include equipment such as refrigerators and freezers. [***101:*** A.16.2.2.2.4; ***101:*** A.17.2.2.2.4]

A.20.3.3.1.2 Day-care homes do not provide for the full-time maintenance of a client. Day-care occupancies that provide a primary place of residence are addressed in other day-care occupancy chapters. *(See Chapters 24 through 33 of NFPA 101.) [**101:** A.17.6.1.1.2]*

A.20.3.3.2.1 The requirements are, of necessity, general in scope, because it is recognized that they apply to all types of day-care occupancies as well as conditions of occupancies, such as truant day-care occupancies; occupancies for the mentally handicapped, vision impaired, hearing impaired, and speech impaired; adult day-care; care of infants; and day-care occupancies. It is fully recognized that no one code can meet all the conditions of the various buildings involved, and it will be necessary for site administrators, through the written fire emergency response plan, to issue supplements to these requirements; however, all supplements should be consistent with these requirements. Additionally, it is recommended that fire safety be a part of the educational programs of the occupancy for clients.

Fire emergency response plans need to be written and made available to all employees, including temporary or substitute staff, so that all employees know what is expected of them during a fire emergency. The elements needed in the written plan should be identified in coordination with the AHJ.

The facility fire emergency response plan might be a module of a facility disaster plan that covers other emergencies.

The proper safeguarding of clients during a fire emergency requires prompt and effective response by the facility employees in accordance with the fire emergency response plan. Duties covered under the plan should be assigned by position rather than by employee name. Such assignment ensures that, in the absence of an employee, the duties of the position will be performed by a substitute or temporary employee assigned to the position. Temporary or substitute employees should be

instructed in advance regarding their duties under the plan for the position to which they are assigned.

Written fire emergency response plans should include, but should not be limited to, information for employees regarding methods and devices available for alerting occupants of a fire emergency. Employees should know how the fire department is to be alerted. Even where automatic systems are expected to alert the fire department, the written plan should provide for backup alerting procedures by staff. Other responses of employees to a fire emergency should include the following:

(1) Removal of clients in immediate danger to areas of safety, as set forth in the plan
(2) Methods of using building features to confine the fire and its by-products to the room or area of origin
(3) Control of actions and behaviors of clients during removal or evacuation activities and at predetermined safe assembly areas

The written plan should state clearly the facility policy regarding the actions staff are to take or not take to extinguish a fire. It should also incorporate the emergency egress and relocation drill procedures set forth in 16.7.2 and 17.7.2 of NFPA *101*.

For additional guidance on emergency plans, see NFPA 1600, *Standard on Disaster/Emergency Management and Business Continuity Programs.* This standard establishes a common set of criteria for disaster management, emergency management, and business continuity programs. [***101***:A.16.7.1; ***101***: A.17.7.1]

A.20.3.3.2.2.1 The requirements are, of necessity, general in scope, because it is recognized that they apply to all types of day-care occupancies as well as conditions of occupancies, such as truant day-care occupancies; day-care occupancies for the mentally handicapped, vision impaired, hearing impaired, and speech impaired. It is fully recognized that no one code can meet all the conditions of the various buildings involved, and it will be necessary for site administrators to issue supplements to these requirements, but all supplements should be consistent with these requirements. [***101***: A.16.7.2.1; ***101***: A.17.7.2.1]

A.20.3.3.2.3.2 Particular attention should be given to keeping all doors unlocked; keeping doors that serve to protect the safety of paths of egress closed and under no conditions blocked open, such as doors on stairway enclosures; keeping outside stairs and fire escape stairs free from all obstructions and clear of snow and ice; and allowing no accumulation of snow or ice or materials of any kind outside exit doors that might prevent the opening of the door or interfere with rapid escape from the building. [***101***: A.16.7.3.2; ***101***: A.17.7.3.2]

A.20.3.3.2.3.4.2 See A.20.1.4.4.2.

A.20.3.3.2.3.4.5 It is the intent that the requirement for adequate adult staff to be awake at all times when clients are present be applied to family day-care and group day-care homes that are operated at night, as well as day-care occupancies. [***101***: A.16.7.5; ***101***: A.17.7.5]

A.20.4.2 Health care occupants have, in large part, varied degrees of physical disability, and their removal to the outside, or even their disturbance caused by moving, is inexpedient or impractical in many cases, except as a last resort. Similarly, recognizing that there might be an operating necessity for the restraint of the mentally ill, often by use of barred windows and locked doors, fire exit drills are usually extremely disturbing, detrimental, and frequently impracticable.

In most cases, fire exit drills, as ordinarily practiced in other occupancies, cannot be conducted in health care occupancies. Fundamentally, superior construction, early discovery and extinguishment of incipient fires, and prompt notification need to be relied on to reduce the occasion for evacuation of buildings of this class to a minimum. [***101***: A.18.7; ***101***: A.19.7]

A.20.4.2.1.5 Many health care occupancies conduct fire drills without disturbing patients by choosing the location of the simulated emergency in advance and by closing the doors to patients' rooms or wards in the vicinity prior to initiation of the drill. The purpose of a fire drill is to test and evaluate the efficiency, knowledge, and response of institutional personnel in implementing the facility fire emergency plan. Its purpose is not to disturb or excite patients. Fire drills should be scheduled on a random basis to ensure that personnel in health care facilities are drilled not less than once in each 3-month period.

Drills should consider the ability to move patients to an adjacent smoke compartment. Relocation can be practiced using simulated patients or empty wheelchairs. [***101***: A.18.7.1.4; ***101***: A.19.7.1.4]

A.20.4.2.2.1 Each facility has specific characteristics that vary sufficiently from other facilities to prevent the specification of a universal emergency procedure. The recommendations that follow, however, contain many of the elements that should be considered and adapted, as appropriate, to the individual facility.

Upon discovery of fire, personnel should immediately take the following action:

(1) If any person is involved in the fire, the discoverer should go to the aid of that person, calling aloud an established code phrase, which provides for both the immediate aid of any endangered person and the transmission of an alarm.
(2) Any person in the area, upon hearing the code called aloud, should activate the building fire alarm using the nearest manual fire alarm box.
(3) If a person is not involved in the fire, the discoverer should activate the building fire alarm using the nearest manual fire alarm box.
(4) Personnel, upon hearing the alarm signal, should immediately execute their duties as outlined in the facility fire safety plan.
(5) The telephone operator should determine the location of the fire as indicated by the audible signal.
(6) In a building equipped with an uncoded alarm system, a person on the floor of fire origin should be responsible for promptly notifying the facility telephone operator of the fire location.
(7) If the telephone operator receives a telephone alarm reporting a fire from a floor, the operator should regard that alarm in the same fashion as an alarm received over the fire alarm system and should immediately notify the fire department and alert all facility personnel of the place of fire and its origin.
(8) If the building fire alarm system is out of order, any person discovering a fire should immediately notify the telephone operator by telephone, and the operator should then transmit this information to the fire department and alert the building occupants. [***101***: A.18.7.2.1; ***101***: A.19.7.2.1]

A.20.4.2.4 The most rigid discipline with regard to prohibition of smoking might not be nearly as effective in reducing

incipient fires from surreptitious smoking as the open recognition of smoking, with provision of suitable facilities for smoking. Proper education and training of the staff and attendants in the ordinary fire hazards and their abatement is unquestionably essential. The problem is a broad one, varying with different types and arrangements of buildings; the effectiveness of rules of procedure, which need to be flexible, depends in large part on the management. [*101*: A.18.7.4; *101*: A.19.7.4]

A.20.4.2.5.1 In addition to the provisions of 20.1.4.4.2, which deal with ignition resistance, additional requirements with respect to the location of cubicle curtains relative to sprinkler placement are included in NFPA 13. [*101*: A.18.7.5.1; *101*: A.19.7.5.1]

A.20.4.2.5.2 See A.20.1.4.4.2.

A.20.4.2.5.7(2) When determining if the hazard for fire development or spread is present, consideration should be given to whether the building or area being evaluated is sprinklered. [*101*: A.18.7.5.6(2); *101*: A.19.7.5.6(2)]

A.20.5.2.4.1 Smoking regulations should include the following:

(1) Smoking should be prohibited in any room, compartment, or area where flammable or combustible liquids, combustible gases, or oxygen is used or stored and in any other hazardous location, and the following also should apply:
   (a) Such areas should be posted with signs that read NO SMOKING or the international symbol for no smoking.
   (b) In residential board and care facilities where smoking is totally prohibited and signs so indicating are placed at all major entrances, secondary signs with language that prohibits smoking are not required.
(2) Smoking by residents classified as not responsible with regard to their ability to safely use and dispose of smoking materials should be prohibited.
(3) Where a resident, as specified in A.20.5.2.4.1(2), is under direct supervision by staff or by a person approved by the administration, smoking might be permitted.
(4) Smoking materials should not be provided to residents or maintained by residents without the approval of the administration.
(5) Areas where smoking is permitted should be clearly identified.
(6) Ashtrays of noncombustible material and safe design should be provided and required to be used in all areas where smoking is permitted.
(7) Self-closing cover devices into which ashtrays can be emptied should be made available to all areas where smoking is permitted and should be required to be used. [*101*: A.32.7.4.1; *101*: A.33.7.4.1]

A.20.5.2.5 The requirements applicable to draperies/curtains, upholstered furniture, and mattresses apply only to new draperies/curtains, new upholstered furniture, and new mattresses. The word *new* means unused, normally via procurement from the marketplace, either by purchase or donation, of items not previously used. Many board and care facilities allow residents to bring into the board and care home upholstered furniture items from the resident's previous residence. Such an item is not new and, thus, is not regulated. On the other hand, some of the larger board and care homes purchase contract furniture, as is done in hotels. Such new, unused furniture, whether purchased or received as a donation, is regulated by the requirements of 20.5.2.5.2. By federal law, mattresses manufactured and sold within the United States must pass testing per 16 CFR 1632 (FF4-72), *Standard for the Flammability of Mattresses and Mattress Pads.* [*101*: A.32.7.5; *101*: A.33.7.5]

A.20.5.2.5.2 New upholstered furniture within board and care homes should be tested for rates of heat release in accordance with 10.3.3 of NFPA *101*. [*101*: A.32.7.5.2; *101*: A.33.7.5.2]

A.20.5.2.5.2.3 New mattresses within board and care homes should be tested for rates of heat release in accordance with 10.3.4 of NFPA *101*. [*101*: A.32.7.5.3; *101*: A.33.7.5.3]

A.20.6.2 Health care occupants have, in large part, varied degrees of physical disability, and their removal to the outside, or even their disturbance caused by moving, is inexpedient or impractical in many cases, except as a last resort. Similarly, recognizing that there might be an operating necessity for the restraint of the mentally ill, often by use of barred windows and locked doors, fire exit drills are usually extremely disturbing, detrimental, and frequently impracticable.

In most cases, fire exit drills, as ordinarily practiced in other occupancies, cannot be conducted in health care occupancies. Fundamentally, superior construction, early discovery and extinguishment of incipient fires, and prompt notification need to be relied on to reduce the occasion for evacuation of buildings of this class to a minimum. [*101*: A.20.7; *101*: A.21.7]

A.20.6.2.1.2 Many health care occupancies conduct fire drills without disturbing patients by choosing the location of the simulated emergency in advance and by closing the doors to patients' rooms or wards in the vicinity prior to the initiation of the drill. The purpose of a fire drill is to test and evaluate the efficiency, knowledge, and response of institutional personnel in implementing the facility fire emergency plan. Its purpose is not to disturb or excite patients. Fire drills should be scheduled on a random basis to ensure that personnel in health care facilities are drilled not less than once in each 3-month period.

Drills should consider the ability to move patients to an adjacent smoke compartment. Relocation can be practiced using simulated patients or empty wheelchairs. [*101*: A.20.7.1.4; *101*: A.21.7.1.4]

A.20.6.2.2.1 Each facility has specific characteristics that vary sufficiently from other facilities to prevent the specification of a universal emergency procedure. The recommendations that follow, however, contain many of the elements that should be considered and adapted, as appropriate, to the individual facility.

Upon discovery of fire, personnel should immediately take the following action:

(1) If any person is involved in the fire, the discoverer should go to the aid of that person, calling aloud an established code phrase, which provides for both the immediate aid of any endangered person and the transmission of an alarm.
(2) Any person in the area, upon hearing the code called aloud, should activate the building fire alarm using the nearest manual fire alarm box.
(3) If a person is not involved in the fire, the discoverer should activate the building fire alarm using the nearest manual fire alarm box.
(4) Personnel, upon hearing the alarm signal, should immediately execute their duties as outlined in the facility fire safety plan.

(5) The telephone operator should determine the location of the fire as indicated by the audible signal.
(6) In a building equipped with an uncoded alarm system, a person on the floor of fire origin should be responsible for promptly notifying the facility telephone operator of the fire location.
(7) If the telephone operator receives a telephone alarm reporting a fire from a floor, the operator should regard that alarm in the same fashion as an alarm received over the fire alarm system and should immediately notify the fire department and alert all facility personnel of the place of fire and its origin.
(8) If the building fire alarm system is out of order, any person discovering a fire should immediately notify the telephone operator by telephone, and the operator should then transmit this information to the fire department and alert the building occupants. [***101:*** A.20.7.2.1; ***101:*** A.21.7.2.1]

A.20.6.2.4 The most rigid discipline with regard to prohibition of smoking might not be nearly as effective in reducing incipient fires from surreptitious smoking as the open recognition of smoking, with provision of suitable facilities for smoking. Proper education and training of the staff and attendants in the ordinary fire hazards and their abatement is unquestionably essential. The problem is a broad one, varying with different types and arrangements of buildings; the effectiveness of rules of procedure, which need to be flexible, depends in large part on the management. [***101:*** A.20.7.4; ***101:*** A.21.7.4]

A.20.6.2.5.1 In addition to the provisions of 20.1.4.4.2, which deal with ignition resistance, additional requirements with respect to the location of cubicle curtains relative to sprinkler placement are included in NFPA 13. [***101:*** A.20.7.5.1; ***101:*** A.21.7.5.1]

A.20.6.2.5.2 See A.20.1.4.4.2.

A.20.7.2.1.2 This requirement is permitted to be met by electronic or oral monitoring systems, visual monitoring, call signals, or other means. [***101:*** A.22.7.1.2; ***101:*** A.23.7.1.2]

A.20.7.2.1.3 Periodic, coordinated training should be conducted and should involve detention and correctional facility personnel and personnel of the fire department legally committed to serving the facility. [***101:*** A.22.7.1.3; ***101:*** A.23.7.1.3]

A.20.7.2.4 Personal property provides combustible contents for fire development. Therefore, adequate controls are needed to limit the quantity and combustibility of the fuels available to burn to reduce the probability of room flashover. The provisions of 20.7.2.4 will not, by themselves, prevent room flashover if personal property controls are not provided. [***101:*** A.22.7.4; ***101:*** A.23.7.4]

A.20.7.2.4.2 See A.20.1.4.4.2.

A.20.7.2.4.4 Mattresses used in detention and correctional facilities should be evaluated with regard to the fire hazards of the environment. The potential for vandalism and excessive wear and tear also should be taken into account when evaluating the fire performance of the mattress. [***101:*** A.23.7.4.3]

A.20.8.2.1.1 Employers are obligated to determine the degree to which employees are to participate in emergency activities. Regulations of the U.S. Department of Labor (OSHA) govern these activities and provide options for employers, from total evacuation to aggressive structural fire fighting by employee brigades. *(For additional information, see 29 CFR 1910, E and L, "OSHA Regulations for Emergency Procedures and Fire Brigades.")* [***101:*** A.28.7.1.1; ***101:*** A.29.7.1.1]

A.20.8.2.1.2 Emergencies should be assumed to have arisen at various locations in the occupancy in order to train employees in logical procedures. [***101:*** A.28.7.1.2; ***101:*** A.29.7.1.2]

A.20.8.2.4.1 Floor diagrams should reflect the actual floor arrangement and should be oriented with the actual direction to the exits. [***101:*** A.28.7.4.1; ***101:*** A.29.7.4.1]

A.20.8.2.4.2 Factors for developing the fire safety information include such items as construction type, suppression systems, alarm and detection systems, building layout, and building HVAC systems. [***101:*** A.28.7.4.2; ***101:*** A.29.7.4.2]

A.20.8.2.5.5 See A.20.1.4.4.2.

A.20.15.4.1 Examples of facilities covered by this standard include, but are not limited to, bakeries, grain elevators, feed mills, flour mills, milling, corn milling (dry and wet), rice milling, dry milk products, mix plants, soybean and other oilseed preparation operations, cereal processing, snack food processing, tortilla plants, chocolate processing, pet food processing, cake mix processing, sugar refining and processing, and seed plants. [**61:** A.1.1.1]

A.20.15.5.2 See NFPA 232, *Standard for the Protection of Records,* where large archives or records storage buildings are involved.

A.20.17.3(2) See also NFPA 914, *Code for Fire Protection of Historic Structures.*

A.21.2.3.1 See A.12.2.1.

A.21.2.3.2 Furniture, floor and wall coverings, and other furnishings in airport terminal occupancies, including passenger holding lounges, waiting areas, restaurant dining rooms, bars, retail stores, etc., should not be made of materials that have high combustibility or smoke-development characteristics, or both. Examples of materials that have high combustibility or smoke-development characteristics, or both, include some plastic foams, latex-rubber foam, some plastics, and some synthetic fibers. Such materials have a tendency to release combustible gases at relatively low temperatures, making them easily ignitable. These materials also release high amounts of heat energy at rapid rates when burning, thereby contributing greatly to fire propagation. [**415:** A.4.1.2]

A.21.2.4.2 Examples of points of flammable vapor release are fuel tank vent openings and fuel hydrant pits. Air supply intake and exhaust openings for air conditioning or ventilating equipment serving the terminal building should not be located on the ramp side of an airport terminal building. Fixed air conditioning and ventilating equipment serving aircraft only should be in a room having no openings communicating with the remainder of the terminal building. [**415:** A.4.2.2]

A.21.2.4.3 Rooms containing coal-, gas-, or oil-fired equipment, or any room containing any other open flame device, should not have openings on the ramp side of the building. Combustion and ventilation air should be supplied from the street side or roof of the building or through a gravity louver from a nonhazardous area in the building. [**415:** A.4.2.3]

A.21.2.5 The hazards to persons from jet intakes and blast, noise, propellers, etc., on the ramp should be taken into consideration in locating emergency exit points leading to ramps from the airport terminal building. A means of notification of

unauthorized usage (such as an alarm system) of these emergency exits may be desirable. [415: A.4.3.2]

A.21.2.6 The assembly portion of the terminal building may include areas such as the concourse waiting areas, baggage claim areas, and restaurants. This should exclude the kitchens, toilets, small office areas, and other areas not normally accessible to the public. [415: A.4.5.1]

A.21.2.6.2.3 The exposure to the airport terminal building from the airport ramp is significant. The number of building sprinklers operating from the exposure fire could be greater than from an internal ignition source. [415: A.4.5.1.5]

A.21.2.6.3.2 If the public fire department is responding to the "street" side of the airport terminal building, timely access to the normal alarm receiving point might be limited by emergency conditions or distance. Planned radio communication with a constantly attended alarm receiving point can assist in a more efficient response by the public fire department. The remote annunciator on the "street" side of the terminal building can provide building condition information if not otherwise available. [415: A.4.5.2.2]

A.21.3.3.1 FAA A/C 150/5390-2A, *Heliport Design Advisory Circular,* contains design and construction information on heliports. This advisory circular provides for adequate clearance between operating aircraft and buildings or structures located at the heliport. The FAA advisory circular should be consulted to ensure that adequate safe practice and facilities are maintained. [418: A.2.1]

A.21.3.4.4 For further information on exit principles, see NFPA *101.* [418: A.3.4]

A.21.3.6.1 Where personnel trained in the operations of the equipment are in attendance, a hose line system is preferred.

The calculations used to develop the minimum extinguishing agent quantities and discharge rates presented in Table A.21.3.6.1(a) and Table A.21.3.6.1(b) for rooftop heliports include the following factors:

(1) *Aircraft Size.* This factor reflects the potential level of risk (e.g., passenger load), the potential fire load (e.g., fuel capacity), and the dimensions (i.e., fuselage length and width), that allow the identification of a meaningful operational objective [i.e., the area to be rendered fire-free (controlled or extinguished)].
(2) *Relative Effectiveness of Agent Selected.* This factor is represented by the specific application rate identified for each of the common generic foam concentrate types.
(3) *Time Required to Achieve Control.* Large-scale fire tests, empirical data, and field experience indicate that 1 minute is both a reasonable and a necessary operational objective.

Table A.21.3.6.1(a) Method to Determine Helicopter Critical Fire Area and Required Minimum Amount of Water for a Hose Line (AFFF) System

NFPA/ICAO Heliport Category (ft)	½ × O.L. of Largest Helicopter[1] (ft)		Fuselage Width Tripled[2] (ft)		Practical Critical Fire Area (ft^2)		Application Rate (gpm/ft^2)		Q_1, Water to Control within 1 Min (gal)		Q_2, Reserve to Extinguish (%)		Q, Total Water to Extinguish (gal)
H-1 0 < 50	25	×	15	=	375	×	0.10	=	37.5	+	100	=	75
H-2 50 < 80	40	×	21	=	840	×	0.10	=	84	+	100	=	168
H-3 80 < 120	60	×	24	=	1440	×	0.10	=	144	+	100	=	288

[1] O.L. = Overall length, measured from tip of main rotor fully extended to tip of tail rotor fully extended.
[2] Fuselage width = Actual fuselage width (does not include landing gear) measured from outside of cabin.
[418:Table A.3.6.1(a)]

Table A.21.3.6.1(b) Method to Determine Helicopter Critical Fire Area and Required Minimum Amount of Water for a Hose Line (AFFF) System

NFPA/ICAO Heliport Category	½ × O.L. of Largest Helicopter[1]		Fuselage Width Tripled[2]		Practical Critical Fire Area		Application Rate		Q_1, Water to Control within 1 Min		Q_2, Reserve to Extinguish		Q, Total Water to Extinguish
(m)	(m)		(m)		(m^2)		[(L/min)/m^2]		(L)		(%)		(L)
H-1 0 < 15.2	7.6	×	4.6	=	34.8	×	4.1	=	141.9	+	100	=	283.8
H-2 15.2 < 24.4	12.2	×	6.4	=	78.0	×	4.1	=	317.9	+	100	=	635.8
H-3 24.4 < 36.6	18.3	×	7.3	=	133.8	×	4.1	=	545.0	+	100	=	1090

[1] O.L. = Overall length, measured from tip of main rotor fully extended to tip of tail rotor fully extended.
[2] Fuselage width = Actual fuselage width (does not include landing gear) measured from outside of cabin.
[418:Table A.3.6.1(b)]

(4) *Time Required to Maintain Controlled Area Fire-Free.* This factor is an operational objective that provides a safety factor for the initial fire attack while waiting for the arrival of backup support.

The calculation method is supported by research and experimental work done mainly at the United States FAA Technical Center. It was developed by the Rescue and Firefighting Panel II (RFFP II), a group of international experts in the field, convened by the International Civil Aviation Organization, Montreal Canada, circa 1970.

The RFFP II initially focused on the concept of the theoretical critical fire area, which was identified in the FAA's large-scale fire tests as "... the area adjacent to the fuselage extending outward in all directions to a limit beyond which a large fuel fire would not melt an aluminum fuselage, regardless of the fire exposure time." For this concept to be useful, specific information about the size of the area was needed. Again, using the FAA Technical Center's work as a basis, the RFFP II defined the theoretical critical fire area (*TCA*) as "the area adjacent to an aircraft in which fire must be controlled."

The definition of *TCA* implies control of the fire within a specific area. In order to achieve this, dimensions need to be determined. The following formulas were developed from that earlier work. Using these formulas, the size of the area of interest can be calculated. For example:

If L is less than 65 ft,

$$TCA = L \times (40 \text{ ft} + W)$$

or

$$TCA = L \times (12 \text{ m} + W)$$

If L is greater than 65 ft,

$$TCA = L \times (100 \text{ ft} + W)$$

or

$$TCA = L \times (30 \text{ m} + W)$$

where:
L = average aircraft length
TCA = theoretical critical fire area
W = average width of aircraft served at the airport of interest

Conceptually, the *TCA* serves as a means for assessing the magnitude of the potential fire hazard of the aircraft accident environment. It *does not represent* the average, maximum, or minimum spill fire size associated with a particular aircraft. However, it does represent a starting point for determining realistic fire-extinguishing agent requirements. The formulas allow for the calculation of the *TCA* area for different sizes of aircraft. They are widely accepted throughout the aircraft fire service community and are applied as described in the following paragraphs.

A 1970 study concluded that in survivable aircraft crashes a practical fire area should be considered that was smaller than the theoretical area. Detailed criteria for the practical fire area and the related quantities of extinguishing agents were formulated during the second meeting of the RFFP II. In developing its material, the panel included a study of the quantities of agents used on actual fires. In 99 out of 106 such fires, the quantities of agents used were less than those recommended by the theoretical critical fire area calculations.

As a result, RFFP II developed material recommending that the practical area be approximately two-thirds the theoretical area. *[See Figure A.21.3.6.1(a).]* This principle has been adopted by the ICAO, the NFPA, and the U.S. FAA in the development of tables that show extinguishing agent volumes for their respective standards and recommended practices. The practical critical fire area (*PCA*) for fixed-wing aircraft is commonly expressed as follows:

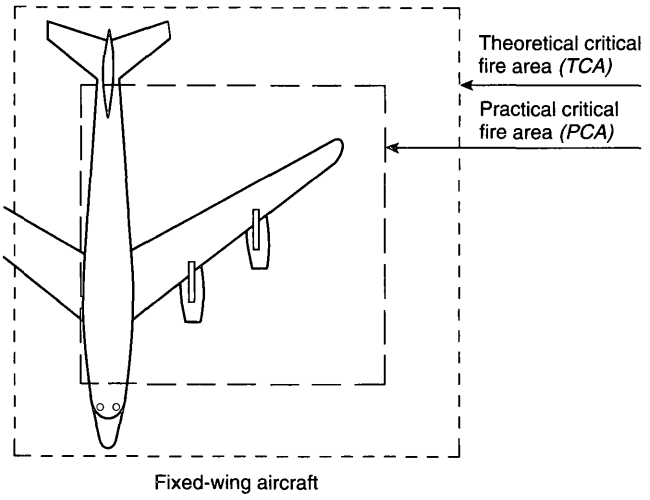

FIGURE A.21.3.6.1(a) Practical Critical Fire Area Relative to Theoretical Critical Fire Area. [418:Figure A.3.6.1(a)]

$$PCA = (0.67)(TCA)$$

where:
PCA = practical critical fire area
TCA = theoretical critical fire area

In adapting the fixed-wing fire protection methodology to helicopters, the committee responsible for NFPA 418 considered the following additional factors that make the fire protection problem of helicopters (rotary-wing aircraft) unique:

(1) *Occupied Space.* Relative to its fixed-wing counterpart, a smaller portion of the overall aircraft length is occupied.
(2) *Fuel Quantities and Location.* Fuel tanks are not located in the "wings" or rotor blades, and relatively small quantities of fuel are involved.
(3) *Impact Energy.* Relative to the fixed-wing counterpart, a helicopter accident generally occurs at slow ground speeds.
(4) *Expected Aircraft Size.* In general, heliports are designed for the largest helicopter expected to utilize the facility, not the median size for the category. *(See Table 3.6.3 of NFPA 418.)*

After considering the factors involved in the fixed-wing methodology and those factors that are unique to helicopters, the committee arrived at a theoretical critical area for helicopters that includes a longitudinal dimension of one-half the overall length of the helicopter and a width equal to three times the fuselage width. In addition, in the absence of any data that suggested a more appropriate alternative, the practical critical fire area has been determined to be 100 percent of the theoretical critical area. *[See Figure A.21.3.6.1(b).]*

Another established principle is the distinction between control and extinguishment of a fire. Test data and a wide range of field experience indicate that the quantities of foam agent needed to control and extinguish an aircraft fire should be determined separately. This principle is expressed in the

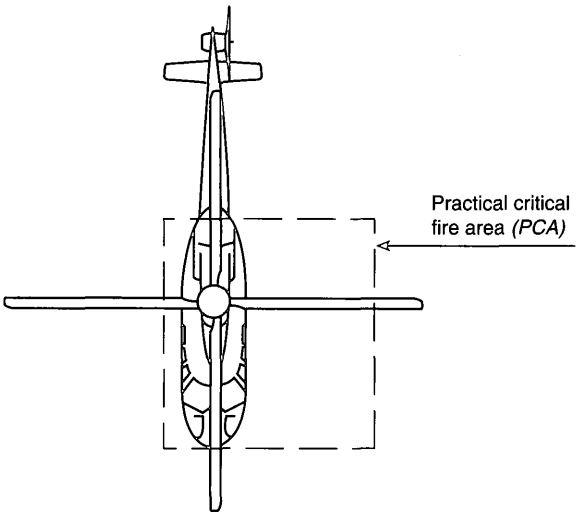

Rotary-wing aircraft

FIGURE A.21.3.6.1(b) Practical Critical Fire Area for Helicopters. [418:Figure A.3.6.1(b)]

following calculation method, which will provide the minimum agent volume for effective fire service operations:

$$Q = Q_1 + Q_2$$

where:

Q = minimum agent volume for effective fire service operations

Q_1 = volume of agent needed for 1-minute control of *PCA*

Q_2 = volume of agent needed for continued control or complete extinguishment of fire related to *PCA*, or both

The relationship between Q_1 and Q_2 as they were developed by the committee responsible for NFPA 418 that studied the fixed-wing fire protection problem is as follows:

$$Q_1 = (\text{application rate}) \times (\text{practical critical area})$$

or

$$Q_1 = (AR)(PCA)$$

Where the application rate (*AR*) is the unit volume of agent applied to a unit area of fire in a unit time (the exact units such as gpm/ft^2 or L/min/m^2 depend on the units convention being used).

$$Q_2 = f(Q_1)$$

And, it has been determined that, for all categories of heliports, $f = 1$.

Therefore:

$$Q = 2[(AR)(PCA)]$$

A sample calculation of the total water quantity, Q, needed where aqueous film-forming foam concentrate is to be used at each of the three categories of heliport is provided in Table A.21.3.6.1(a) and Table A.21.3.6.1(b). A similar set of water quantities can be calculated for any other foam concentrate for which an accepted application rate is known. The value for the AFFF application rate in column 5 of Table A.21.3.6.1(a) and Table A.21.3.6.1(b) is substituted and the indicated calculations are performed to obtain the value of Q for the specific foam concentrate to be used.

To fully appreciate the significance and simplicity of this methodology as a means of determining levels of fire protection, it should be clearly understood that Q_1 is only that minimum quantity of fire-fighting agent required for 1-minute fire control (90 percent extinguishment) of the anticipated practical critical fire area. Therefore, any fire and rescue service cannot be expected to perform an effective rescue effort where equipped with less than the quantity of primary extinguishing agent specified by the volume of Q_1 for the specific airport/heliport category. Furthermore, a fire suppression/rescue mission that is initiated using the required minimum application rate and is continued at that rate, while effectively extinguishing fire or securing unburned fuel within the practical area, ceases operations at the end of 1 minute. In other words, the agent specified by the volume Q_1 is depleted. There is no agent available for mop-up activities, foam blanket repair, or standby protection for continued rescue or salvage activities. Therefore, while the control volume Q_1 provides an operational significance that is critical to the rescue operation, it is, at the same time, limited.

It should be clear, therefore, that in order to extend an effective fire suppression and rescue operation beyond the initial 1-minute fire control period, an additional volume of foam agent, Q_2, needs to be available. This volume of agent is used to repair foam blanket damage that might be caused by evacuees and rescue workers walking through the foamed areas or by hot surfaces created by the initial fire. Furthermore, Q_2 is needed to extinguish all fire in the practical critical fire area and those fires outside the practical critical area that initially are determined to pose no threat to life. Agent quantity in accordance with Q_2 also provides standby protection before total extinguishment during interior aircraft search operations and for the removal of immobile survivors after fire control. It also is used for securing the fire area during initial aircraft salvage operations immediately after total fire extinguishment. Therefore, an aircraft fire service equipped with only the 1-minute fire control volume represented by Q_1 is expected to assume a significant level of risk. That risk cannot be considered a "calculated risk" unless the manager selecting the reduced agent volume knows the nature of the fire area and the potential hazard involved. [**418:** A.3.6.1]

A.21.3.6.3 The area of application and the duration where using a hose line system is reduced because foam is applied efficiently and directly on the fire by trained personnel. [**418:** A.3.6.3]

A.25.1.6 Recommendations on the distribution, use, and maintenance of portable fire-extinguishing equipment are given in NFPA 10.

The general information in NFPA 10 defines Class A, B, C, and D fires and contains specific recommendations for the minimum area of distribution for each extinguisher for "light," "ordinary," and "extra hazard" occupancies. An annex to NFPA 10 gives the appropriate ratings of each type and size of extinguisher based upon a standard method of test.

The requirements cited in NFPA 10 are, in general, minimum requirements and do not preclude the installation of additional fire-extinguishing equipment where desired. [**102:** A.9.3]

A.25.1.8 Because of the variety of types of places of assembly covered in NFPA 102, no general requirement for patrols or

fire watchers has been included. The committee responsible for NFPA 102 fully recognizes the importance of this feature of fire protection, however, and believes that a system of well-trained patrols or fire watchers should be maintained in every place of assembly where fire hazards might develop. Such locations would include, among others, the spaces underneath grandstands and the areas inside and outside tents and air-supported structures. The fire watchers serve to detect incipient fires and to prevent an accumulation of materials that will carry fire. The number of such watchers required will, of course, vary for the different types of assembly occupancies, depending upon the combustibility of the construction and the number of persons accommodated. Provided with an adequate supply of portable fire-extinguishing equipment located at readily accessible points, such a fire watch or detail should be able to prevent small fires from reaching serious proportions. [**102:** A.9.5]

A.25.5.3.3.1 The requirements of 25.5.3.3.1 can be considered as a Class 4, Type 60 system per NFPA 110, *Standard for Emergency and Standby Power Systems.* [***101:*** A.11.9.3.3.1]

A.26.1.3(1) Either condition (a) or (b) of 1.1.2(1) of NFPA 45 meeting the minimum quantity will bring the lab within the scope of NFPA 45. A school lab with a low pressure natural gas system supplying Bunsen burners (with less than the minimum quantities of combustible or flammable liquids and less than the minimum quantities of other flammable gases) is an example of a lab outside the scope of NFPA 45. [**45:** A.1.1.2(1)]

A.26.2 These laboratories are not intended to include isolated frozen section laboratories; areas in which oxygen is administered; blood donor rooms in which flammable, combustible, or otherwise hazardous materials normally used in laboratory procedures are not present; and clinical service areas not using hazardous materials. [**99:** A.3.3.87]

A.28.1.6.2.1.3 Where clearly impractical for economic or physical reasons, the AHJ could permit the omission of an automatic fire-extinguishing system when considering water supply availability and adequacy and size of facility. [**303:** A.6.3.1.3]

A.28.1.6.2.2 The combustibility of the boats in storage should be considered in determining the hazard classification for appropriate sprinkler system design. [**303:** A.6.3.2]

A.28.1.6.2.2.2 See A.28.1.6.2.1.3. [**303:** A.6.3.2.2]

A.28.1.6.2.3.4 See A.28.1.6.2.1.3. [**303:** A.6.3.3.4]

A.28.1.6.2.4 To comply with this requirement, water supplies can consist of a hydrant that is part of an approved water supply system, drafting hydrant, or drafting site. [**303:** A.6.3.5]

A.28.1.7.3 It is recommended that an auxiliary power supply be provided to ensure lighting in the event of a power failure. [**303:** A.7.1.3]

A.28.1.8.4 Batteries should be removed for storage and charging wherever practical. [**303:** A.7.2.4]

A.28.1.9 Marinas and boatyard owners and operators are encouraged to be familiar with the requirements of NFPA 302, *Fire Protection Standard for Pleasure and Commercial Motor Craft.* It is recommended that marina and boatyard owners and operators encourage vessel owners and occupants to practice proper fire prevention aboard moored and stored vessels. [**303:** A.8.1]

A.28.2.2 See NFPA 303, *Fire Protection Standard for Marinas and Boatyards.* [**307:** A.1.3.2]

A.28.2.3(1) See NFPA 30, *Flammable and Combustible Liquids Code.* [**307:** A.1.3.3(1)]

A.28.2.3(2) See NFPA 59A, *Standard for the Production, Storage, and Handling of Liquefied Natural Gas (LNG),* or NFPA 58, *Liquefied Petroleum Gas Code.* [**307:** A.1.3.3(2)]

A.28.3.1 Many vessels undergoing construction, conversion, or repairs, and vessels laid up in a shipyard or elsewhere are readily vulnerable to fire, due to the quantity and character of combustible materials used in building. Long passageways, unenclosed stairways, hatches, and hoistways facilitate the rapid spread of fire throughout the vessel. Often the location of the vessel is isolated so that private protection is the main source of fire-fighting services. Even where major municipal protection is available, material damage or complete destruction before effective means of extinguishment are brought into action often results from the following:

(1) Possible delayed response, due either to late discovery of the fire or to the absence of means for quick notification
(2) Lack of special equipment in many municipal fire departments for combating shipboard fires
(3) An unfamiliarity with ship construction due to the transitory nature of the risk [**312:** A.1.2]

A.30.1.5.1 Additional fire protection considerations can include items such as fixed suppression systems, automatic fire detection, manual fire alarm stations, transmission of alarms to off-site locations, and limiting volume delivered per transaction. [**30A:** A.7.3.5.1]

A.30.1.6.7 Natural ventilation can normally be expected to dissipate any fuel vapors before they reach ignitable concentrations if at least two sides of the dispensing area are open to the building exterior. [**30A:** A.7.3.6.7]

A.30.1.6.9 Oil/water separators might not be designed to remove or separate flammable or combustible liquids other than oil. [**30A:** A.7.3.6.9]

A.30.2.8 The ventilation requirements contained in this section do not consider exhaust emissions from motor vehicle engines. An appropriate professional should be consulted to determine precautions necessary to protect against this health hazard. [**30A:** A.7.5]

A.30.2.8.1 Manual control switches for supply and exhaust ventilating systems should be located close to the entrance to the area served. In buildings protected by automatic sprinklers or fire alarm systems, it is recommended that the necessary interlocks be provided to shut down supply and exhaust fans when the sprinklers or fire alarms operate. For service facilities for CNG-fueled vehicles and LNG-fueled vehicles, see NFPA 52. [**30A:** A.7.5.1]

A.30.2.9.6 Enclosed rooms or spaces should prohibit the transmission of gases from the room or space repairing or storing CNG- or LNG-fueled vehicles to other areas of the building. Other areas outside of the enclosure, if not repairing or storing CNG- or LNG-fueled vehicles, can use other heating methods. Note that, according to A-1-1 of NFPA 52, CNG weighs about two-thirds that of air and, therefore, as a gas, will rise in a room. LNG at a temperature of less than or equal to –170°F (–112°C) is heavier than ambient air [at 60°F (15°C)], but as the LNG's temperature rises, it becomes lighter than air. Determination of the potential for gas accumulation should

be based on an engineering analysis. (Guidance for classification of hazardous locations is available in NFPA 497.) [30A: A.7.6.6]

A.31.1 Each individual property has its own special conditions of stock handling, exposure, and topography. For this reason, only basic fire protection principles are discussed herein and are intended to be applied with due consideration of all local factors involved. The AHJ should be consulted.

A.31.3.2.1.1 Good housekeeping should be maintained at all times, including regular and frequent cleaning of materials-handling equipment.

A.31.3.2.1.6.1 See NFPA 505, *Fire Safety Standard for Powered Industrial Trucks Including Type Designations, Areas of Use, Conversions, Maintenance, and Operations.*

A.31.3.2.1.10.1 See NFPA 82, *Standard on Incinerators and Waste and Linen Handling Systems and Equipment*, for small rubbish burners.

A.31.3.2.2.1 Saw mills, planing mills, treating plants, adzing mills, and similar buildings without blank walls should be separated from yard storage by a clear space in accordance with the recommendations of NFPA 80A, *Recommended Practice for Protection of Buildings from Exterior Fire Exposures.*

Unsprinklered manufacturing buildings and other large structures with combustible contents represent a severe exposure to yard storage, unless the exterior walls have the necessary fire resistance to act as a fire separation and are essentially absent of unprotected openings.

A.31.3.2.2.2 Weeds, grass, and similar vegetation should be prevented throughout the entire yard, and any vegetation growth should be sprayed as often as needed with an herbicide or ground sterilizer, or should be grubbed out. Dead weeds should be removed after destruction. Weed burners should not be used.

A.31.3.2.3 Where practical, some form of fixed system of alarm notification or communication equipment should be provided within the storage yard (e.g., telephones, radios).

Portable fire extinguishers suitable for the fire hazard involved should be provided at convenient, conspicuously accessible locations in the yard. Approved portable fire-extinguishing equipment should be located so that the travel distance to the nearest unit is not more than 75 ft (23 m). See NFPA 10. Approved fire extinguishers suitable for the fire hazard involved should be provided on all power vehicles and units, including haulage or private locomotives in the yard.

A.31.3.3.1.2 The type of operations at properties where the provisions of 31.3.4 apply vary widely. Retail lumber and building material operations are often characterized by large area buildings with minor outside storage areas. On the other hand, wholesale and distribution yards can involve large outside storage areas that present fire protection problems similar to mill yards.

A.31.3.3.2.1 Fire loss experience in lumberyards indicates that the following are the principal factors that allow lumberyard fires to reach serious proportions:

(1) Large, undivided stacks
(2) Congested storage conditions
(3) Delayed fire detection
(4) Inadequate fire protection
(5) Ineffective fire-fighting tactics

A.31.3.3.2.2 It is recognized that retail and wholesale lumber storage yards are normally located within municipal system boundaries, where the system should be capable of supplying not less than four 2½ in. (65 mm) hose streams simultaneously [1000 gpm (4000 L/min)]. Where large-scale fire-fighting operations can be expected, larger water supplies are needed. Where protection from municipal water supplies and hydrant systems is not provided or is not considered adequate by the AHJ, a yard fire hydrant system should be provided and installed in accordance with NFPA 24, *Standard for the Installation of Private Fire Service Mains and Their Appurtenances.*

A.31.3.3.3.1 Where the danger of underground fire is present, refuse-filled or sawdust-filled land should not be used.

A.31.3.3.3.3 Air-dried stickered stacks are subject to rapid-fire spread through the air spaces and should therefore be kept as low as practicable.

A.31.3.3.4.2 Because of the large quantities of material generally involved in lumberyard fires, some form of exposure protection for adjoining properties is recommended. Clear spaces or walls capable of providing fire barriers between yard storage and the exposed properties should be used. The responsibility for the protection of properties adjoining a lumberyard is often a joint responsibility to be worked out between the lumberyard and adjoining property owners. The AHJ should be consulted.

A.31.3.4.1 Each individual property has its own special conditions of yard use, material-handling methods, and topography. For this reason, only basic fire protection principles are discussed herein and are intended to be applied with due consideration of all local factors involved. The AHJ should be consulted.

A.31.3.4.2 Fire loss experience in lumber storage yards indicates that the following are the principal factors that allow lumberyard fires to reach serious proportions:

(1) Large, undivided stacks
(2) Congested storage conditions
(3) Delayed fire detection
(4) Inadequate fire protection
(5) Ineffective fire-fighting tactics

A.31.3.4.3 Refuse-filled or sawdust-filled land, swampy ground, or areas where the hazard of underground fire is present should not be used as a storage site.

A.31.3.4.3.1 For basic fire protection, the hydrant system should be capable of supplying not less than four 2½ in. (65 mm) hose streams simultaneously [1000 gpm (4000 L/min)] while maintaining a positive residual pressure in the fire protection hydrant system of not less than 20 psi (1.38 bar).

Where large-scale fire-fighting operations can be expected, larger water supplies with adequate mains are needed.

For early extinguishment with basic fire protection, hydrants should be spaced with sufficient 2½ in. (65 mm) hose attached to allow rapid hose laying to all parts of the stacking areas. For this reason, the hydrants should be spaced at about 250 ft (76 m) intervals so that any part of the yard can be reached with 250 ft (60 m) of hose. Hydrants preferably should be located at fire department access road intersections. A hydrant hose house with not less than 250 ft (60 m) of fire hose and auxiliary equipment should be provided at each hydrant. *(See NFPA 24.)*

A.31.3.5.1.1 Each individual property has its own special conditions of yard use, stock-handling methods, and topography. For this reason, only basic fire protection principles are discussed herein, and are intended to be applied with due consideration of all local factors involved. Ties, as used herein, include ties, poles, piles, posts, and other similar forest products. Treated ties are ties that are pressure impregnated with preservatives.

A.31.3.5.2 Fire loss experience in tie storage yards indicates that the following are the principal factors that allow fires to reach serious proportions:

(1) Large, undivided stacks
(2) Congested storage conditions
(3) Delayed fire detection
(4) Inadequate fire protection
(5) Ineffective fire-fighting tactics

A.31.3.5.3 Refuse-filled or sawdust-filled land, swampy ground, or areas where the hazard of underground fire is present should not be used as storage site.

A.31.3.5.3.1 With relatively open stacking (that is, stacking that allows for penetration of fire-extinguishing streams), sufficient alleyway width can usually be accomplished by providing a not-less-than 4 ft (1.2 m) alleyway width between alternate rows of tie stacks. *[See Figure A.31.3.5.3.1(a).]* Flat crib-style stacking without space between the stacks that forms solid packed rows should require a not-less-than 4 ft (1.2 m) alleyway width between each row. *[See Figure A.31.3.5.3.1(b).]*

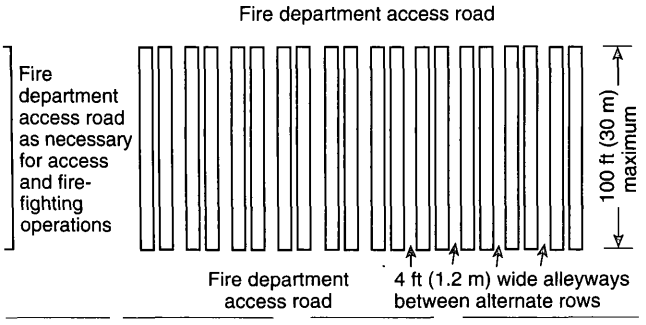

FIGURE A.31.3.5.3.1(a) Relatively Open Stacking Methods.

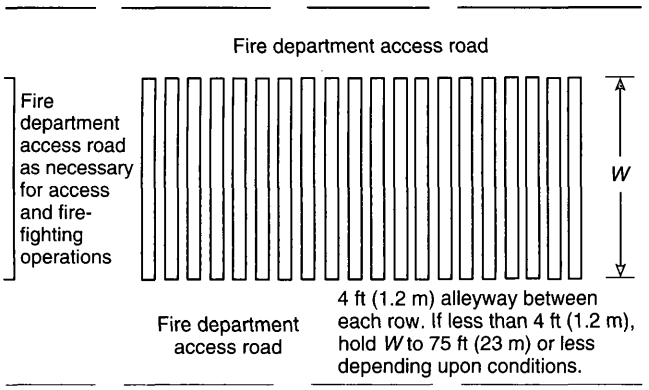

FIGURE A.31.3.5.3.1(b) Crib-Style Stacking into Solid Rows.

A.31.3.5.3.2 For basic fire protection, the hydrant system should be capable of supplying not less than four 2½ in. (65 mm) hose streams simultaneously [not less than 1000 gpm (4000 L/min)] while maintaining a positive residual pressure in the fire protection hydrant system of not less than 20 psi (1.38 bar).

Where large-scale fire-fighting operations can be expected, larger water supplies with adequate mains are needed.

For early extinguishment with basic fire protection, hydrants should be spaced with sufficient 2½ in. (65 mm) hose attached to allow rapid hose laying to all parts of the stacking areas. For this reason, hydrants should be spaced at about 250 ft (76 m) intervals so that any part of the yard can be reached with 200 ft (60 m) of hose. Hydrants preferably should be located at fire department access road intersections. A hydrant hose house with not less than 200 ft (60 m) of fire hose and auxiliary equipment should be provided at each hydrant. *(See NFPA 24.)*

A.31.3.5.3.5 Heights in excess of 20 ft (6 m) seriously restrict effective extinguishing operations.

A.31.3.6.1 Each individual property has its own special conditions of yard use, stock-handling methods, and topography. It is recognized that climate conditions, wood species, and the age of piles are all factors affecting fire safety. For these reasons, only basic fire protection principles are discussed herein, and are intended to be applied with due consideration of all local factors involved. Except for the surface layer, the moisture content of a pile of wood chips or hogged material is quite high, so surface fires do not generally penetrate more than a few inches into the pile. Fire tests indicate that, for areas of average humidity conditions, the flame propagation over the surface is relatively slow. These conditions allow ready extinguishment, provided that there is early detection and good access. It is expected that, in areas where long periods of low humidity prevail, faster surface flame spread can be anticipated, increasing the importance of early detection and good access.

A.31.3.6.2.1 Fire experience and fire tests indicate that two completely different types of fires can occur in storage piles — surface fires and internal fires. Fire prevention activities and fire protection facilities should, therefore, include preparations for coping with both situations.

Internal heating is a hazard inherent to long-term bulk storage of chips and hogged material that progresses to spontaneous combustion under certain pile conditions. Internal fires are difficult to detect and extinguish. Unless provisions are made for measuring internal temperatures, such fires can burn for long periods before emission of smoke at the surface indicates an internal fire.

Extinguishment then becomes a lengthy and expensive loss-control and operating problem requiring equipment and manpower to move large portions of the pile, either by digging out the burning portions or removing the unburned portions of the pile. Experience has shown that these conditions create very large losses, and special attention should be given to the prevention of spontaneous combustion and to pre-fire planning where evaluating how best to handle an imminent or actual fire in a particular pile.

A.31.3.6.2.2 Prevention of internal fires requires an understanding of the factors that cause exothermic oxidation so that steps can be taken to minimize this hazard and to provide means of monitoring temperature conditions inside the pile.

Refuse and old chips should not be permitted in the chip pile base. The storage site should be thoroughly cleaned before starting a new pile.

The quality of chip supplies should be controlled in terms of percentage of fines. The concentration of fines should not be allowed during pile buildup.

Pneumatic systems produce an air classification of stored materials that should be recognized, and appropriate steps should be taken to minimize concentration of fines.

It is preferable to spread new stored materials in a relatively even layer over the pile.

Vehicles used on all piles should be of a type that minimizes compaction.

Veneer chip piles should be limited to 50 ft (15 m) in height.

A.31.3.6.2.2(4) For example, whole-tree chip piles containing bark, leaves, and other extraneous or hogged material can be subject to greater degrees of spontaneous heating and thermal degradation and should be reclaimed more frequently.

A.31.3.6.2.2(5) Fundamentally, several small piles are better than one large pile.

A.31.3.6.2.2(8) Minimizing the diffusion of water from wet, stored material into dry fires is important to reduce exothermic heating caused by adsorption effects. Maintaining surface moisture content is also important so as to reduce the hazard of surface fires during periods of hot, dry weather.

A.31.3.6.3 A high standard of housekeeping should be maintained around all potential heat sources.

Care should be exercised to prevent tramp metal from entering the piles, or sections of blower pipes from being buried in the piles.

A.31.3.6.3.1 For very large piles, two or more access roadways should be provided on opposite sides of the pile.

A.31.3.6.3.2 Narrow, low piles facilitate fire extinguishment.

A.31.3.6.3.4 Due to the size and configuration of piles, providing portable fire extinguishers within 75 ft (23 m) of travel distance to any point is not practical.

A.31.3.6.3.5 Fire hydrants connected to yard mains should be provided so that any part of the pile(s) can be reached by hose equipment provided in each hydrant hose house. Each hydrant hose house should be equipped with a complement of 2½ in. (65 mm) and 1½ in. (38 mm) hose, a 2½ in. (65 mm) and 1½ in. (38 mm) gated wye, and 1½ in. (38 mm) combination nozzles.

Hydrants should be spaced at about 250 ft (76 m) intervals so that any part of the yard can be reached with 200 ft (60 m) of hose.

Where pile configurations are such that all parts of the pile cannot be reached by the hose, a fire hose cart(s) equipped with an ample supply of hose and nozzles should be strategically placed in the storage area.

The amount of water needed to control a pile fire varies substantially depending on the size of the pile. Weather conditions, operating methods, geographic location, type of material stored, and the degree to which wetting can be employed affect the potential for a large area surface fire. Experience indicates that exposure to long periods of hot, dry weather with no regular surface wetting creates conditions under which fast-spreading surface fires, which require many hose streams for control depending on the size of the pile, can occur.

Likewise, the frequency of pile turnover and operating methods affect the potential for serious internal fires. Piles built using methods that allow a concentration of fines and piles stored for long periods of time with no turnover are subject to internal heating that, if undetected, can create intense internal fires.

A flow of not less than 500 gpm (2000 L/min) should be provided at any fire hydrant in the pile area. Additional flows should be provided as needed where conditions are likely to produce serious surface fires or large internal fires. Fire mains should be engineered to deliver the recommended gallonage plus allowance for operational uses and special extinguishing equipment at a residual pressure of 60 psi to 100 psi (4.1 bar to 6.9 bar) at the hydrants.

A.31.3.6.3.7 With the use of the equipment specified in 31.3.6.3.7, surface types of pile fires can usually be removed from the affected areas and extinguished.

Where deep-seated fires occur within the pile or under the pile in tunnels or other enclosures, this equipment is invaluable in breaking down the entire pile and spreading it out in a safe yard area, which allows fire fighters using hand hose lines or deluge units to extinguish both the pile and ground-spread stored material.

A.31.3.6.4.1 Experience indicates that radiated heat from exposing fires in storage piles does not ordinarily pose a serious ignition threat to other piles, provided that recommended clear spaces are maintained. Flying brands from exposing fires, especially during high winds, do present a hazardous ignition source. Upwind forest or brush fires can also present a problem in relation to flying sparks and brands.

A.31.3.6.4.2 Buildings or other structures near storage piles can pose a serious exposure hazard to the pile.

A.31.3.6.4.3 Greater clearance is desirable when piles are high and side slopes are greater than 60 degrees.

A.31.3.7 This type of chip has a much higher aliphatic hydrocarbon (sugar) content and spontaneously ignites readily. Lumber chips are debarked and thus lose the cambium layer associated with stored sugars. It is these sugars that start the bacterial decomposition that proceeds to spontaneous ignition.

A.31.3.8.1.1 Each individual property has its own special conditions for yard use, stock-handling methods, and topography. For this reason, only basic fire protection principles are discussed herein, and are intended to be applied with due consideration of all local factors involved.

A.31.3.8.2 Fire loss experience in outside storage of logs indicates that the following are the principal factors that allow log pile fires to reach serious proportions:

(1) Large, undivided piles
(2) Congested storage conditions
(3) Delayed fire detection
(4) Inadequate fire protection
(5) Ineffective fire-fighting tactics

A.31.3.8.3 Refuse-filled or sawdust-filled land, swampy ground, or areas where the hazard of underground fire is present should not be used as a storage site.

A.31.3.8.3.3 Where practical, greater widths should be provided to minimize the effects of radiated heat, particularly in high-piled yards.

A.31.3.8.3.3.2 Heights in excess of 20 ft (6 m) seriously restrict effective extinguishing operations, since successful extinguishment of log pile fires requires penetration of the pile from the side by hose streams.

A.31.3.8.3.3.3 See Figure A.31.3.8.3.3.3.

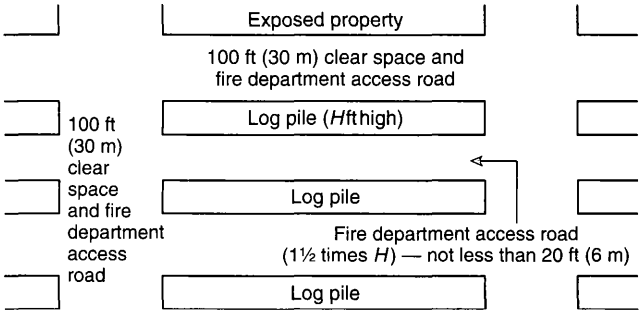

FIGURE A.31.3.8.3.3.3 Layout of Log Storage Yard.

A.31.3.8.3.3.4 For basic fire protection, the hydrant system should be capable of supplying not less than four 2½ in. (65 mm) hose streams simultaneously [not less than 1000 gpm (4000 L/min)] while maintaining a positive residual pressure in the fire protection hydrant system of not less than 20 psi (1.38 bar).

Where large-scale fire-fighting operations can be expected, larger water supplies with adequate mains are needed.

For early extinguishment with basic fire protection, hydrants should be spaced with sufficient 2½ in. (65 mm) hose attached to allow rapid hose laying to all parts of the piling areas. For this reason, hydrants should be spaced at about 250 ft (76 m) intervals so that any part of the yard can be reached with 200 ft (60 m) of hose. Hydrants should be located at fire department access road intersections. A hydrant hose house with not less than 200 ft (60 m) of fire hose and auxiliary equipment should be provided at each hydrant. *(See NFPA 24.)*

A.31.3.8.3.6 The installation of a portable piping system equipped with irrigation or lawn-type sprinklers on the top of each log pile is recommended.

A.32.4.1.3.1 Paragraphs 32.4.1.3.1 and 32.4.1.3.2 recognize motion picture and television industry practices that require sets to change constantly and that sets are "temporary" construction not subject to building codes or standards. Solid ceilings that obstruct the stage sprinklers are "flown" (moved) in or out to permit special shooting angles or lighting requirements, often on a scene-by-scene basis. With temporary walls and ceilings, it would be impractical to install a sprinkler system in a constantly changing structure. Therefore, one or more of the following mitigation techniques should be used to compensate for the areas shielded from sprinkler spray by solid or hard ceilings or platforms:

(1) Approved and listed heat detectors or smoke detectors can be installed beneath such solid or hard ceilings in excess of 600 ft^2 (55.7 m^2) in area and platforms in excess of 600 ft^2 (55.7 m^2) in area and 3 ft (0.9 m) in height. Detectors should be connected to an approved and listed central, proprietary, or remote station service, or a local alarm that will provide an audible signal (that is, bell, horn) at a constantly attended location. The detector system, including the alarm panel, is defined as a portable system as it is intended to be reinstalled when platforms or sets are changed. The detectors that are secured to standard outlet boxes and the listed fire alarm panels can be temporarily supported by sets, platforms, or pedestals. Spacing of detectors should be per manufacturers' requirements.
(2) The ceiling can be positioned to allow for the operation of the building's automatic fire sprinkler system after videotaping, filming, or broadcasting of programs has been completed for the day.
(3) A fire watch should be provided when the set is not in use.
(4) No combustible materials should be stored under any platforms. Consideration should be given to secure such covered areas with screen wire or other materials that will permit visual inspection and emergency access.
(5) Approved/listed fire retardants can be applied beneath combustible platforms and on combustible, hard-ceiling sets. [**140:** A.5.2.3.1]

A.32.4.1.3.2 See A.32.4.1.3.1. [**140:** A.5.2.3.2]

A.33.1 Outdoor Tire Pile Fire-Fighting Tactics and Strategy. Fire service professionals who have managed major scrap tire piles believe that the best approach is to allow the tire pile to burn while protecting exposures like buildings, heavy equipment, and surrounding tire piles. Once the tire pile is in a smoldering stage, heavy equipment can be used to pull the pile apart and the tire material can be extinguished incrementally. For additional information, see "Rings of Fire: Fire Prevention & Suppression of Outdoor Tire Piles."

A.33.4.3 This can include but is not limited to the availability of earth-moving equipment or other approved means of controlling a fire.

A.33.7.5 Altered tire material piles have been known to spontaneously combust after a heavy precipitation. Investigators have considered anaerobic action and potential heat from oxidation of steel belts as the source of exothermic reaction.

A.34.1.1.2(7) The limitations on the type and size of storage are intended to identify those situations where tire storage is present in limited quantity and incidental to the main use of the building. Occupancies such as aircraft hangars, automobile dealers, repair garages, retail storage facilities, automotive and truck assembly plants, and mobile home assembly plants are types of facilities where miscellaneous tire storage could be present. The fire protection sprinkler design densities specified by NFPA 13 are adequate to provide protection for the storage heights indicated. Storage beyond these heights or areas presents hazards that are addressed by this *Code* and are outside the scope of NFPA 13.

A.34.2.7 Paper classifications were derived from a series of large-scale and laboratory-type small-scale fire tests. However, not all paper in a class burns with exactly the same characteristics.

Paper can be soft or hard, thick or thin, or heavy or light and can also be coated with various materials. The broad range of papers can be classified according to various properties. One important property is basis weight, which is defined as the weight of a sheet of paper of a specified area. Two broad categories of paper are recognized by industry, which are paper and paperboard. Paperboard normally has a basis weight of 20 lb (9 kg) or greater measured on a sheet 1000 ft^2 (92.9 m^2) in area. Stock with a basis weight less than 20 lb/1000 ft^2 (9.1 kg/92.9 m^2) is normally categorized as paper. The basis weight of paper is usually measured on a sheet 3000 ft^2 (278.7 m^2) in area. The basis weight of paper

can also be measured on the total area of a ream of paper, which is normally the case for the following types of printing and writing papers:

(1) Bond paper in which 500 sheets 17 in. × 22 in. (432 mm × 559 mm) equals 1300 ft^2 (120.8 m^2) per ream
(2) Book paper in which 500 sheets 25 in. × 38 in. (635 mm × 965 mm) equals 3300 ft^2 (306.6 m^2) per ream
(3) Index paper in which 500 sheets 25.5 in. × 30.5 in. (648 mm × 775 mm) equals 2700 ft^2 (250.8 m^2) per ream
(4) Bristol paper in which 500 sheets 22.5 in. × 35 in. (572 mm × 889 mm) equals 2734 ft^2 (254 m^2) per ream
(5) Tag paper in which 500 sheets 24 in. × 36 in. (610 mm × 914 mm) equals 3000 ft^2 (278.7 m^2) per ream

For the purposes of this *Code*, all basis weights are expressed in lb/1000 ft^2 (kg/92.9 m^2) of paper. To determine the basis weight per 1000 ft^2 (92.9 m^2) for papers measured on a sheet of different area, the following formula should be applied:

$$\frac{\text{Basis weight}}{1000\ \text{ft}^2} = \text{basis weight} \times 1000 \text{ measured area}$$

For example, to determine the basis weight per 1000 ft^2 (92.9 m^2) of 16 lb (7.3 kg) bond paper, the formula is as follows:

$$\frac{16\ \text{lb}}{1300\ \text{ft}^2} \times 1000 = \frac{12.3\ \text{lb}}{1000\ \text{ft}^2}$$

Large- and small-scale fire tests indicate that the burning rate of paper varies with the basis weight. Heavyweight paper burns more slowly than lightweight paper. Full-scale roll paper fire tests were conducted with the following types of paper:

(1) Linerboard of 42 lb/1000 ft^2 (19.1 kg/92.9 m^2) nominal basis weight
(2) Newsprint of 10 lb/1000 ft^2 (4.5 kg/92.9 m^2) nominal basis weight
(3) Tissue of 5 lb/1000 ft^2 (2.3 kg/92.9 m^2) nominal basis weight

The rate of fire spread over the surface of the tissue rolls was extremely rapid in the full-scale fire tests. The rate of fire spread over the surface of the linerboard rolls was slower. Based on the overall results of these full-scale tests, along with additional data from small-scale testing of various paper grades, the broad range of papers was classified into three major categories as follows:

(1) Heavyweight, which has a basis weight of 20 lb/1000 ft^2 (9.1 kg/92.9 m^2) or greater
(2) Mediumweight, which has a basis weight of 10 lb to 20 lb/1000 ft^2 (4.5 kg to 9.1 kg/92.9 m^2)
(3) Lightweight, which has a basis weight of less than 10 lb/1000 ft^2 (4.5 kg/92.9 m^2) and tissues regardless of basis weight

The various types of papers normally found in each of the four major categories are illustrated in Table A.34.2.7.

A.34.3.1 With protection installed in accordance with this *Code*, fire protection of overhead steel and steel columns might not be necessary. Consideration should be given to subdividing large area warehouses in order to reduce the amount of merchandise that could be affected by a single fire.

Walls or partitions are recommended to be provided to separate the storage area from mercantile, manufacturing, or other occupancies to prevent the possibility of transmission of fire or smoke between the two occupancies. Door openings should be equipped with automatic-closing fire doors appropriate for the fire resistance rating of the wall or partition.

A.34.3.3 Since most of the fire tests were conducted without heat and smoke venting and draft curtains, protection specified in NFPA 13 was developed without their use.

For guidance on smoke and heat venting, see NFPA 204, *Standard for Smoke and Heat Venting.*

Smoke removal is important to manual fire fighting and overhaul. Vents through eave-line windows, doors, monitors, or gravity or mechanical exhaust systems facilitate smoke removal after control of the fire is achieved.

Results of tests organized by the Fire Protection Research Foundation and the Retail Committee on Group A Plastics to study the interaction of sprinklers, vents, and draft curtains indicate that the impact of automatic vents on sprinkler performance is neutral when automatic sprinkler discharge is adequate for the hazard and that draft curtains are potentially negative. Test results show that the placement of sprinklers and the thermal sensitivity of sprinklers and vents should be considered. Care should be exercised in the placement of

Table A.34.2.7 Paper Classification

Heavyweight	Mediumweight	Lightweight	Tissue
Linerboards	Bond and reproduction	Carbonizing tissue	Toilet tissue
Corrugated medium board	Vellum	Cigarette	Towel tissue
Kraft roll wrappers	Offset	Fruit wrap	
Milk carton board	Tablet	Onion skin	
Folding carton board	Computer		
Bristol board	Envelope		
Tag	Book		
Vellum bristol board	Label		
Index	Magazine		
Cupstock	Butcher		
Pulp board	Bag		
	Newsprint (unwrapped)		

draft curtains. Where required to be installed, draft curtains should be aligned where possible with aisles or other clear spaces in storage areas. Draft curtains where positioned over storage could adversely affect sprinkler operations. The number of operating sprinklers increased and led to a fire that consumed more commodity compared to other tests with fires ignited away from the draft curtains.

A.34.4.1 Commodities that are particularly susceptible to water damage should be stored on skids, dunnage, pallets, or elevated platforms in order to maintain at least 4 in. (100 mm) clearance from the floor.

A.34.4.2.2 Protection for exposed steel structural roof members could be needed and should be provided as indicated by the AHJ.

A.34.4.2.5 Incandescent light fixtures should have shades or guards to prevent the ignition of commodity from hot bulbs where possibility of contact with storage exists.

A.34.5.1 Wet systems are recommended for storage occupancies. Dry systems are permitted only where it is impractical to provide heat. Preaction systems should be considered for storage occupancies that are unheated, particularly where in-rack sprinklers are installed or for those occupancies that are highly susceptible to water damage.

A.34.5.4.2 See Annex M.

A.34.6.3.2 The use of welding, cutting, soldering, or brazing torches in the storage areas introduces a severe fire hazard and, when possible, should be relocated to a designated area. The use of mechanical fastenings and mechanical saws or cutting wheels is recommended.

A.34.6.6 Periodic inspections of all fire protection equipment should be made in conjunction with regular inspections of the premises. Unsatisfactory conditions should be reported immediately and necessary corrective measures taken promptly.

A.34.6.6.2 All fire-fighting and safety personnel should realize the great danger in shutting off sprinklers once opened by heat from fire. Shutting off sprinklers to locate fire could cause a disaster. Ventilation, use of smoke masks, smoke removal equipment, and removal of material are safer. *(See* NFPA 1620, *Recommended Practice for Pre-Incident Planning, for additional information.)*

Sprinkler water should be shut off only after the fire is extinguished or completely under the control of hose streams. Even then, rekindling is a possibility. To be ready for prompt valve reopening if fire rekindles, a person stationed at the valve, a fire watch, and dependable communications between them are needed until automatic sprinkler protection is restored.

Prefire emergency planning is important and should be done by management and fire protection personnel, and the action to be taken discussed and correlated with the local fire department personnel. The critical time during any fire is in the incipient stage, and the action taken by fire protection personnel upon notification of fire can allow the fire to be contained in its early stages.

Pre-emergency planning should incorporate the following:

(1) Availability of hand fire-fighting equipment for the height and type of commodity involved
(2) Availability of fire-fighting equipment and personnel trained for the type of storage arrangement involved
(3) Assurance that all automatic fire protection equipment, such as sprinkler systems, water supplies, fire pumps, and hand hose, is in service at all times

Sprinkler protection installed as required in this *Code* is expected to protect the building occupancy without supplemental fire department activity. Fires that occur in rack storage occupancies protected in accordance with this *Code* are likely to be controlled within the limits outlined in Annex K, since no significant building damage is expected. Fire department activity can, however, minimize the extent of loss. The first fire department pumper arriving at a rack storage–type fire should connect immediately to the sprinkler system's fire department connection and start pumping operations.

In the test series for storage up to 25 ft (7.6 m), the average time from ignition to smoke obscuration in the test building was about 13 minutes. The first sprinkler operating time in these same fires averaged about 3 minutes. Considering response time for the waterflow device to transmit a waterflow signal, approximately 9 minutes remains between the time of receipt of a waterflow alarm signal at fire department headquarters and the time of smoke obscuration within the building as an overall average.

In the test series for storage over 25 ft (7.6 m), the visibility time was extended. If the fire department facility emergency personnel arrive at the building in time to have sufficient visibility to locate the fire, suppression activities with small hose lines should be started. (Self-contained breathing apparatus is recommended.) If, on the other hand, the fire is not readily visible, hose should be laid to exterior doors or exterior openings in the building and charged lines provided to these points, ready for ultimate mop-up operations. Manual fire-fighting operations in such a warehouse should not be considered a substitute for sprinkler protection.

Important: The sprinkler system should be kept in operation during manual fire-fighting and mop-up operations.

During the testing program, the installed automatic extinguishing system was capable of controlling the fire and reducing all temperatures to ambient within 30 minutes of ignition. Ventilation operations and mop-up were not started until this point. The use of smoke removal equipment is important.

Smoke removal capability should be provided. Examples of smoke removal equipment include the following:

(1) Mechanical air-handling systems
(2) Powered exhaust fans
(3) Roof-mounted gravity vents
(4) Perimeter gravity vents

Whichever system is selected, it should be designed for manual actuation by the fire department, thus allowing personnel to coordinate the smoke removal (ventilation) with mop-up operations.

See also NFPA 600, *Standard on Industrial Fire Brigades*, and Annex M and Annex N in this *Code*.

A.34.7.1 Annex K provides an explanation of rack storage test data and procedures.

A.34.7.3.1 Rack storage as referred to in this *Code* contains commodities in a rack structure, usually steel. Many variations of dimensions are found. Racks can be single-row, double-row, or multiple-row, with or without solid shelves. The standard commodity used in most of the tests was 42 in. (1.07 m) on a side. The types of racks covered in this *Code* are as follows:

(1) Double-row racks, in which pallets rest on two beams parallel to the aisle. Any number of pallets can be supported by one pair of beams. *[See Figure A.34.7.3.1(a) through Figure A.34.7.3.1(d).]*

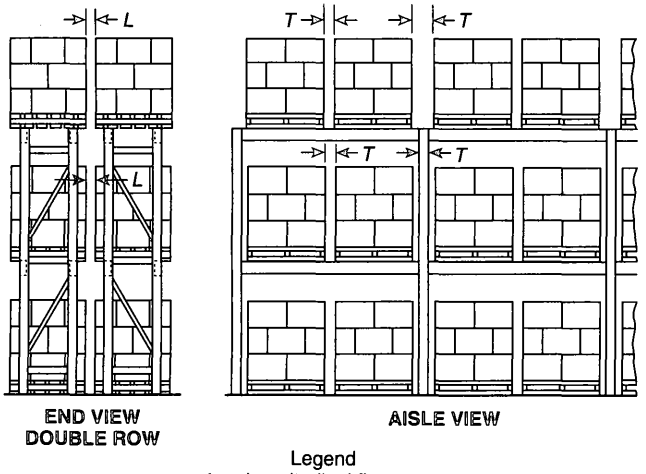

Legend
L — Longitudinal flue space
T — Transverse flue space

FIGURE A.34.7.3.1(a) Conventional Pallet Rack.

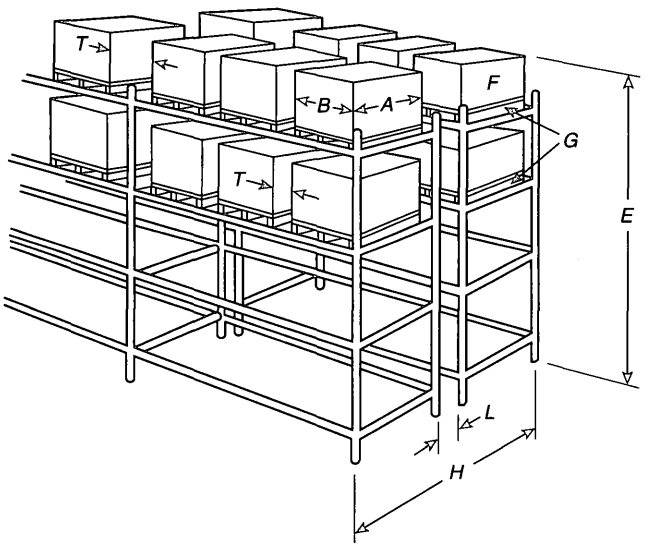

Legend

A — Load depth	*G* — Pallet
B — Load width	*H* — Rack depth
E — Storage height	*L* — Longitudinal flue space
F — Commodity	*T* — Transverse flue space

FIGURE A.34.7.3.1(b) Double-Row Racks Without Solid or Slatted Shelves.

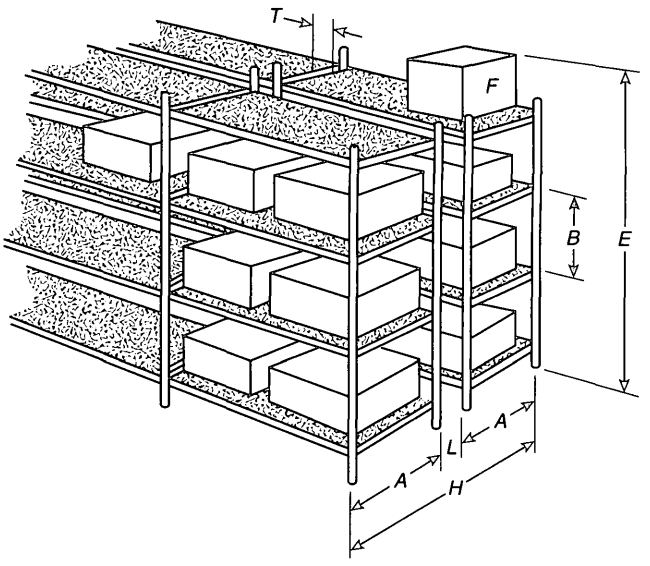

Legend

A — Shelf depth	*H* — Rack depth
B — Shelf height	*L* — Longitudinal flue space
E — Storage height	*T* — Transverse flue space
F — Commodity	

FIGURE A.34.7.3.1(c) Double-Row Racks with Solid Shelves.

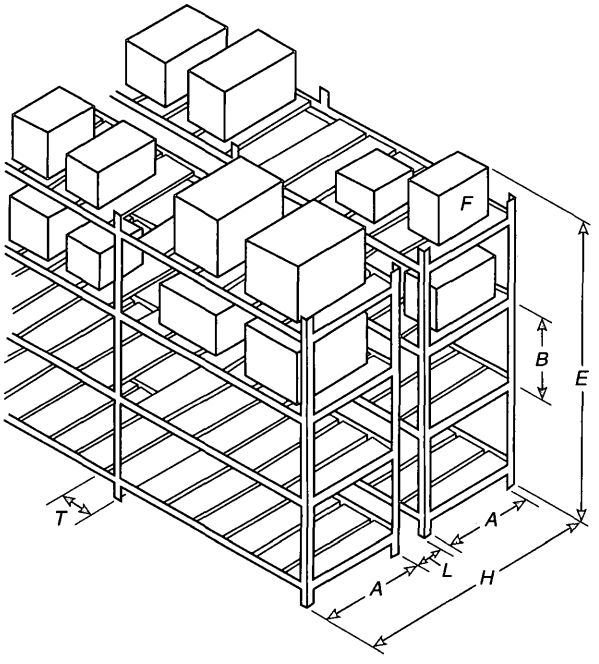

Legend

A — Shelf depth	*H* — Rack depth
B — Shelf height	*L* — Longitudinal flue space
E — Storage height	*T* — Transverse flue space
F — Commodity	

FIGURE A.34.7.3.1(d) Double-Row Racks with Slatted Shelves.

(2) Automatic storage-type rack, in which the pallet is supported by two rails running perpendicular to the aisle. *[See Figure A.34.7.3.1(e).]*
(3) Multiple-row racks more than two pallets deep, measured aisle to aisle, which include drive-in racks, drive-through racks, flow-through racks, and portable racks arranged in the same manner, and conventional or automatic racks with aisles less than 42 in. (1.07 m) wide. *[See Figure A.34.7.3.1(f) through Figure A.34.7.3.1(j).]*
(4) Movable racks, which are racks on fixed rails or guides. They can be moved back and forth only in a horizontal two-dimensional plane. A moving aisle is created as abutting racks are either loaded or unloaded, then moved across the aisle to abut other racks. *[See Figure A.34.7.3.1(k).]*
(5) Solid shelving, which are conventional pallet racks with plywood shelves on the shelf beams *[see Figure A.34.7.3.1(c) and Figure A.34.7.3.1(d)]*. These are used in special cases.
(6) Cantilever rack, in which the load is supported on arms that extend horizontally from columns. The load can rest on the arms or on the shelves supported by the arms. *[See Figure A.34.7.3.1(l).]*

Load depth in conventional or automatic racks should be considered a nominal 4 ft (1.22 m). *[See Figure A.34.7.3.1(b).]*

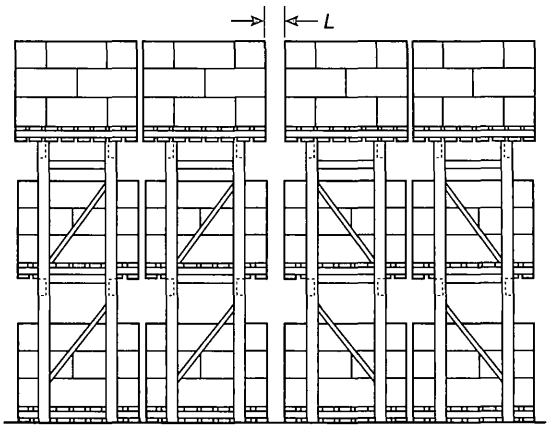

L — Longitudinal flue space

FIGURE A.34.7.3.1(f) Multiple-Row Rack to be Served by a Reach Truck.

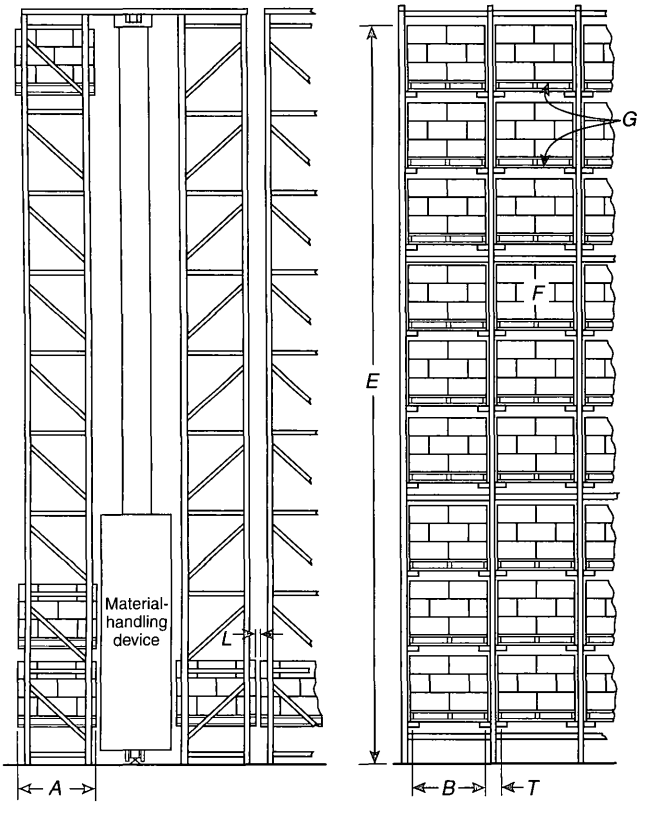

Legend

A — Load depth
B — Load width
E — Storage height
F — Commodity
G — Pallet
L — Longitudinal flue space
T — Transverse flue space

FIGURE A.34.7.3.1(e) Automatic Storage-Type Rack.

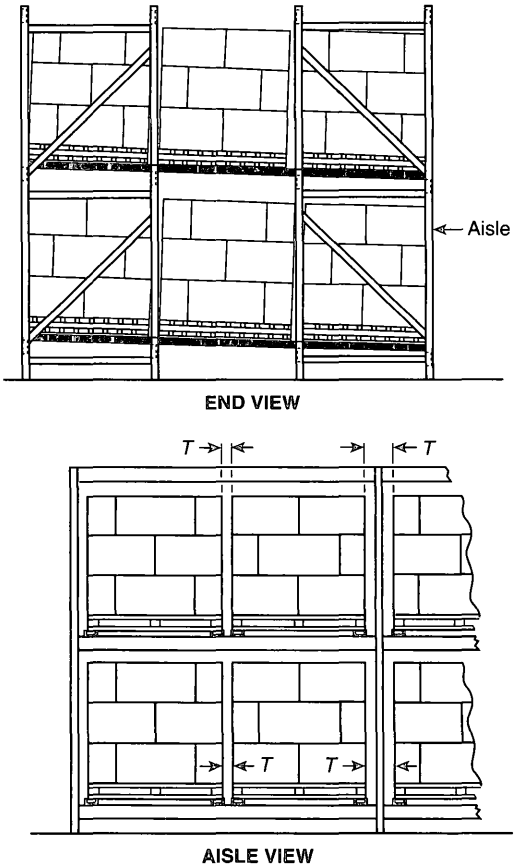

T — Transverse flue

FIGURE A.34.7.3.1(g) Flow-Through Pallet Rack.

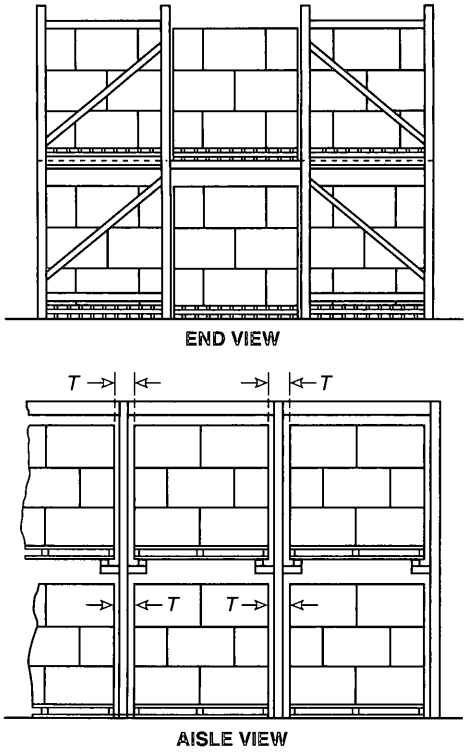

FIGURE A.34.7.3.1(h) Drive-In Rack — Two or More Pallets Deep (Fork Truck Drives into the Rack to Deposit and Withdraw Loads in the Depth of the Rack).

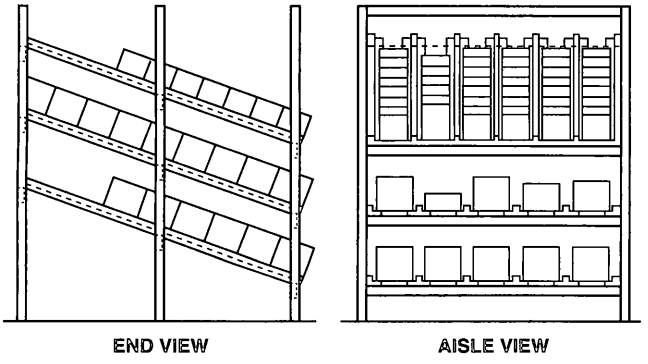

FIGURE A.34.7.3.1(i) Flow-Through Rack.

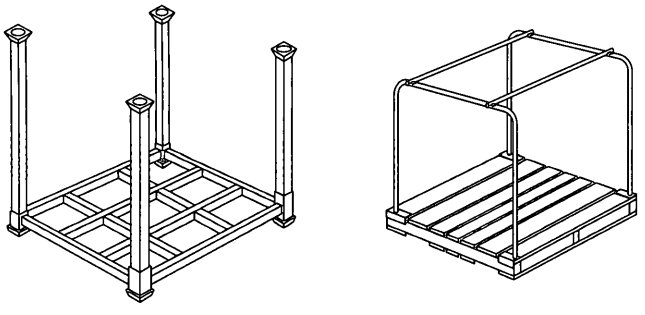

FIGURE A.34.7.3.1(j) Portable Racks.

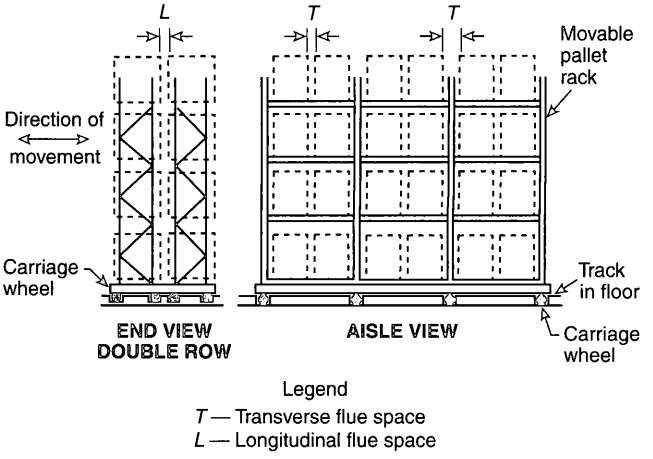

FIGURE A.34.7.3.1(k) Movable Rack.

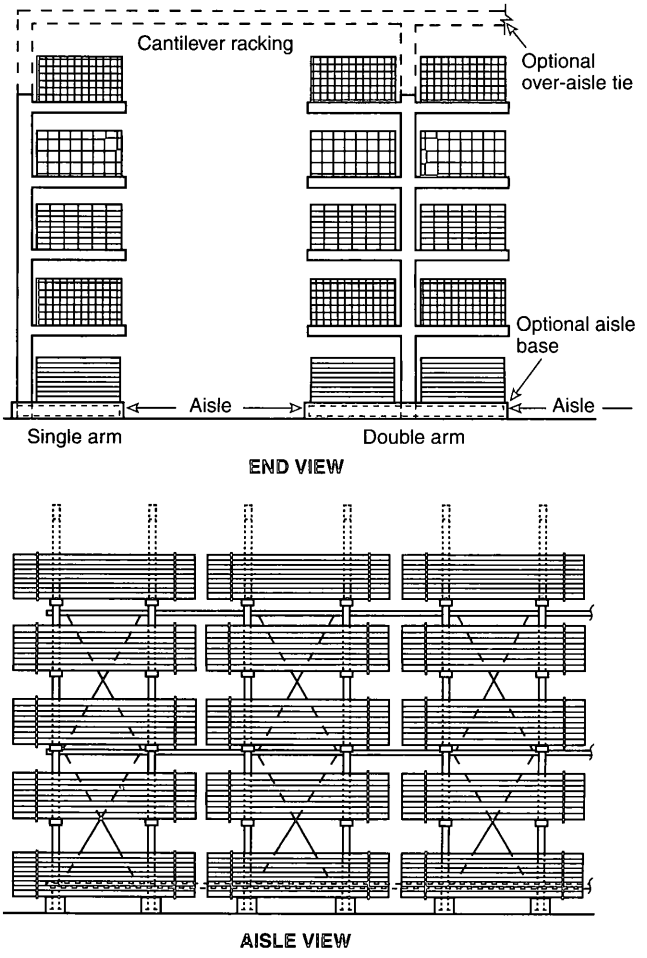

FIGURE A.34.7.3.1(l) Cantilever Rack.

A.34.7.3.2 Fixed rack structures should be designed to facilitate removal or repair of damaged sections without resorting to flame cutting or welding in the storage area. Where sprinklers are to be installed in racks, rack design should anticipate the additional clearances necessary to facilitate installation of sprinklers. The rack structure should be anchored to prevent damage to sprinkler lines and supply piping in racks.

Rack structures should be designed for seismic conditions in areas where seismic resistance of building structure is required.

A.34.7.3.3 Storage in aisles can render protection ineffective and should be discouraged.

A.34.7.3.3.3 See Chapter 12 of NFPA 13.

A.34.7.3.4.1.1 Detection systems, concentrate pumps, generators, and other system components essential to the operation of the system should have an approved standby power source.

A.34.7.3.4.2.1(1) Where high-expansion foam is contemplated as the protection media, consideration should be given to possible damage to the commodity from soaking and corrosion. Consideration also should be given to the problems associated with removal of foam after discharge.

A.34.8.1 Illustrations of some, but not necessarily all, tire storage arrangements are shown in Figure A.34.8.1(a) through Figure A.34.8.1(g).

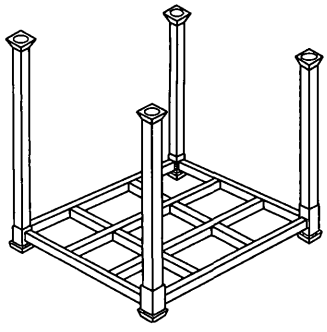

FIGURE A.34.8.1(a) Typical Open Portable Rack Unit.

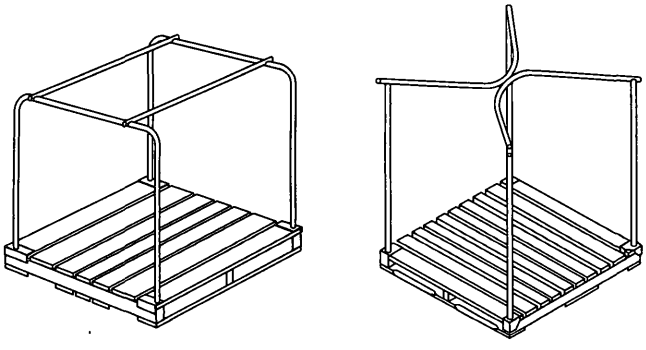

FIGURE A.34.8.1(b) Typical Palletized Portable Rack Units.

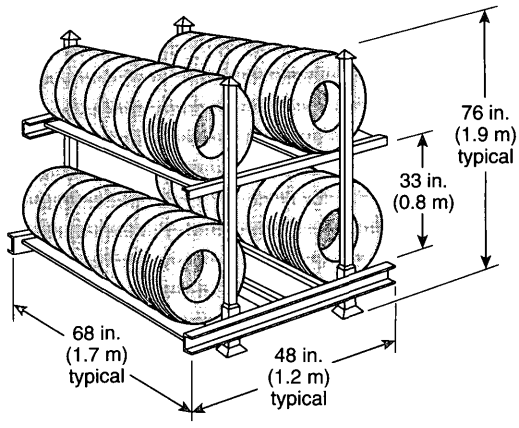

FIGURE A.34.8.1(c) Open Portable Tire Rack.

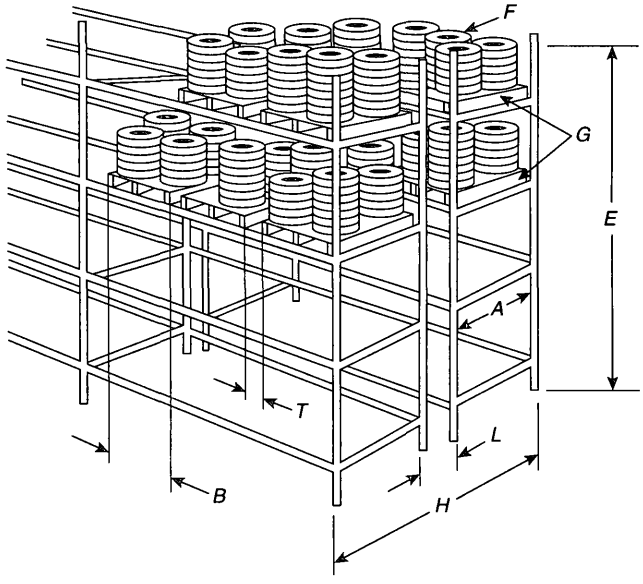

Legend

A — Load depth	*G* — Pallet
B — Load width	*H* — Rack depth
E — Storage height	*L* — Longitudinal flue space
F — Commodity	*T* — Transverse flue space

FIGURE A.34.8.1(d) Double-Row Fixed Rack Tire Storage.

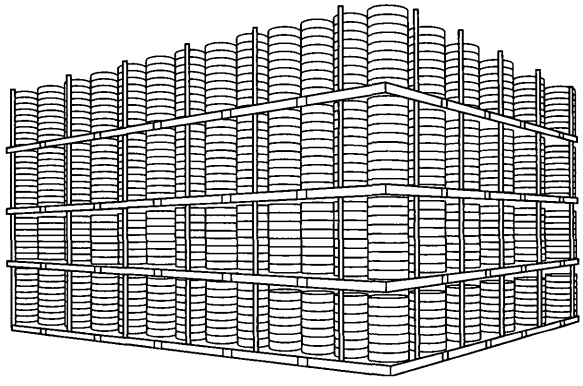

FIGURE A.34.8.1(e) Palletized Portable Rack On-Side Tire Storage Arrangement (Banded or Unbanded).

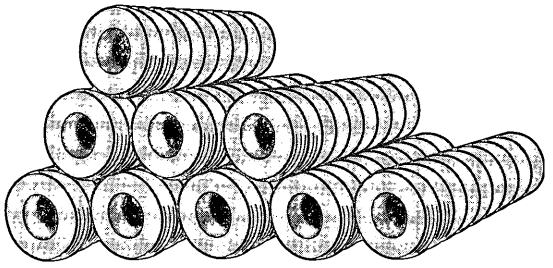

FIGURE A.34.8.1(f) On-Tread, On-Floor Tire Storage Arrangement (Normally Banded).

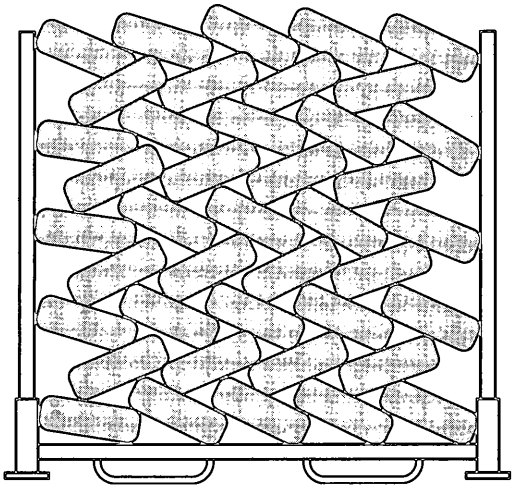

FIGURE A.34.8.1(g) Typical Laced Tire Storage.

A.34.8.2.3 NFPA *101* accurately reflects the travel distance requirements as follows:

(1) Tire storage is classified as ordinary hazard.
(2) Tire fires begin burning slowly. In combination with an acceptable automatic sprinkler system, this slower burning allows time for egress.
(3) Tire storage warehouses have a low occupant load.
(4) Large aisle widths [8 ft (2.4 m) minimum] required in 34.8.3.1.4 of this *Code* facilitate egress.

A.34.8.3.1.1 Limiting the pile length is not intended. *(See Figure A.34.8.3.1.1.)*

A.34.9.2 With protection installed in accordance with this *Code*, fire protection of overhead steel and steel columns is not necessary. However, some lightweight beams and joists can distort and necessitate replacement, particularly following fires involving plastic-wrapped rolls stored 20 ft (6.1 m) and higher.

A.34.10.1 Idle pallet storage introduces a severe fire condition. Stacking idle pallets in piles is the best arrangement of combustibles to promote rapid spread of fire, heat release, and complete combustion. After pallets are used for a short time in warehouses, they dry out and edges become frayed and splintered. In this condition they are subject to easy ignition from a small ignition source. Again, high piling increases considerably both the challenge to sprinklers and the probability of involving a large number of pallets when fire occurs. Therefore storing idle pallets outdoors where possible is preferable.

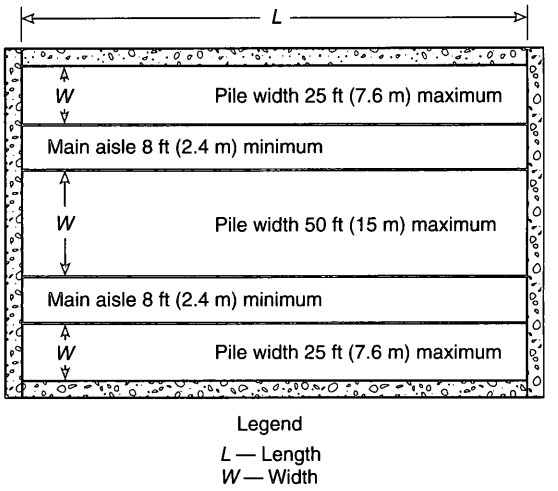

FIGURE A.34.8.3.1.1 Typical Tire Piling Arrangement.

A fire in idle plastic or wooden pallets is one of the greatest challenges to sprinklers. The undersides of the pallets create a dry area on which a fire can grow and expand to other dry or partially wet areas. This process of jumping to other dry, closely located, parallel, combustible surfaces continues until the fire bursts through the top of the stack. Once this happens, very little water is able to reach the base of the fire. The only practical method of stopping a fire in a large concentration of pallets with ceiling sprinklers is by means of prewetting. In high stacks, prewetting cannot be done without abnormally high water supplies. The storage of idle pallets should not be permitted in an unsprinklered warehouse containing other storage.

A.34.10.3 The practice that some materials are stored on pallets in an open yard is recognized. Since stacks of idle pallets present a severe fire problem, attention needs to be paid to the storage arrangements of the pallets. Manual outside open sprinklers generally are not a reliable means of protection unless property is attended to at all times by plant emergency personnel. Open sprinklers with a deluge valve are preferred.

A.41.1.2(7) There are more detailed and in some cases more stringent requirements for torch-applied roofing found in NFPA 241. [51B: A.1.3.1(7)]

A.41.2.1 The Technical Committee on hot work operations (NFPA 51B) recognizes that management might not always have expertise in hot work and, therefore, would need a knowledgeable designated agent or contractor to act on its behalf. Examples of those who might not have the expertise can include owners of small retail shops, a small apartment complex manager, or a grocery store owner who has no knowledge of hot work safe practices.

Management should ensure that the contractor has evidence of financial responsibility, which can take the form of an insurance certificate or other document attesting to coverage or responsibility. [51B: A.4.1]

A.41.2.2.3 Alternate methods to hot work should be considered where practical. [51B: A.4.2.3]

A.41.2.2.6 The inspection is usually made ½ hour after the completion of hot work to detect and extinguish possible smoldering fires. The inspector should be alert for circumstances that can require an extension of the final inspection interval. [51B: A.4.2.6]

A.41.2.4.1 The fire watch duties can be assigned to anyone who understands the hazard of the hot work being performed and the limitations placed on that hot work operation by the person issuing the hot work permit (PAI). The fire watch has the responsibility to make certain the hot work area is maintained in a fire-safe condition throughout performance of the hot work and has the authority to stop the hot work if unsafe conditions are observed. The fire watch must understand the basic hazards of any combustible construction involved with the hot work area, the fire exposure hazard hot work creates to occupancies adjacent to or below the hot work operation, the hazards associated with the occupancy, and the need to maintain proper isolation of all hot work operations from combustible or flammable materials. The fire watch should also be properly trained in use of manual, portable fire extinguishers and emergency notification procedures within the facility. The fire watch is not a replacement for proper planning to prevent conditions that allow a fire to develop, regardless of the fire-fighting equipment available and the capabilities of the individuals involved. [**51B:** A.4.4.1]

A.41.2.4.4 The fire watch should have experience with test fires. [**51B:** A.4.4.4]

A.41.2.4.7 These tasks might include moving partitions relating to the hot work, sweeping in the immediate area, and minimal assistance to the operator. [**51B:** A.4.4.7]

A.41.3.2 For additional information on cutting and welding of containers that have held flammable materials, see NFPA 326, *Standard for the Safeguarding of Tanks and Containers for Entry, Cleaning, or Repair,* and AWS F-4.1, *Recommended Safe Practices for the Preparation for Welding and Cutting Containers and Piping.*

Additional consideration should be given when performing hot work in areas near the storage of large quantities of exposed, readily ignitable materials such as bulk sulfur, baled paper, or cotton. For additional information on welding and cutting in storage areas, refer to Chapter 34 and NFPA 655, *Standard for Prevention of Sulfur Fires and Explosions.* [**51B:** A.5.2]

A.41.3.3 The decision tree in Figure A.41.3.3 can be used to determine if a hot work permit is necessary. [**51B:** A.5.3]

A.41.3.3.1 Examples of hot work permits are shown in Figure A.41.3.3.1(a) and Figure A.41.3.3.1(b). These permits can be modified to suit local conditions. [**51B:** A.5.3.1]

A.41.3.3.2(3) When hot work is performed at an elevated level, it should be noted that the sparks or slag can fall at a trajectory and land further than 35 ft (11 m) horizontally from a point directly under the hot work operator. [**51B:** A.5.3.2(3)]

A.41.3.3.3 It is advisable that the permit should be issued for a maximum period of 24 hours. [**51B:** A.5.3.3]

A.41.3.3.4 In some situations, it is advisable to inspect the area once per shift if conditions warrant. [**51B:** A.5.3.4]

A.41.3.4.1 The decision tree in Figure A.41.3.4.1 can be used to determine if a fire watch is necessary. [**51B:** A.5.4.1]

A.41.3.4.1(1) Figure A.41.3.4.1(1) demonstrates the hot work 35-ft (11-m) rule. [**51B:** A.5.4.1(1)]

A.41.3.4.2 Management, the PAI, or the operator can extend the duration of the fire watch based on fire hazards or work being performed. [**51B:** A.5.4.2]

A.41.3.4.3 An additional fire watch(es) might be necessary in certain situations, such as where hot work is performed near open shafts, or at elevated heights or where sparks can travel through spaces such as openings. [**51B:** A.5.4.3]

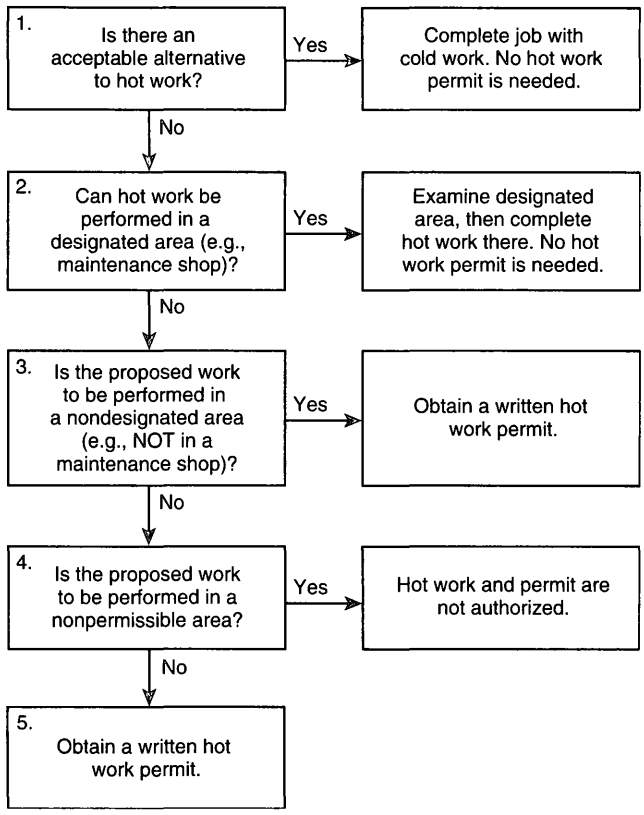

FIGURE A.41.3.3 Hot Work Permit Decision Tree. [51B:Figure A.5.3]

A.41.3.5 For hot tapping on a gas pipeline, see ASME B31.8, *Gas Transmission and Distribution Piping Systems.* [**51B:** A.5.5]

A.41.3.7 Heavier materials such as woolen clothing or heavy cotton are preferable to lighter materials because they are more difficult to ignite. Cotton clothing, if used for protection, should be chemically treated to reduce its combustibility. Clothing treated with flame-resistant materials can lose some of its protective characteristics after repeated washing or cleaning. Materials that can melt and cause severe burns should not be used as clothing when welding or cutting.

Sparks can lodge in rolled-up sleeves, pockets of clothing, or cuffs of overalls or trousers. Therefore, it is recommended that sleeves and collars be kept buttoned and pockets be eliminated from the front of clothing. Where pockets are present, they should be emptied of flammable or readily combustible materials. Trousers or overalls should not have cuffs and should not be turned up on the outside. Trousers should overlap shoe tops to prevent spatter from getting inside shoes.

Frayed clothing is particularly susceptible to ignition and burning and should not be worn when welding or cutting. [**51B:** A.5.7]

A.41.4.1 A common example of a situation where Chapter 6 of NFPA 51B would apply is work performed in a single-dwelling home by a plumber sweating a pipe. Another example is the repair of a wrought iron railing used for steps in a single-dwelling home. A third example is welding performed

Side 1
HOT WORK PERMIT

Date _____

Building _____

Dept. _____ Floor _____

Work to be done _____

_____

Special precautions _____

_____

Is fire watch required? _____

The location where this work is to be done has been examined, necessary precautions taken, and permission is granted for this work. (See other side.)
Permit expires _____

Signed _____
Permit Authorizing Individual (PAI)

Time started _____ Completed _____

FINAL CHECK
Work area and all adjacent areas to which sparks and heat might have spread [including floors above and below and on opposite side of wall(s)] were inspected 30 minutes after the work was completed and were found fire safe.

Signed _____
Permit Authorizing Individual (PAI)

Side 2
ATTENTION

Before approving any hot work permit, the PAI shall inspect the work area and confirm that precautions have been taken to prevent fire in accordance with NFPA 51B.

PRECAUTIONS
- ❑ Sprinklers in service
- ❑ Hot work equipment in good repair

WITHIN 35 FT (11 M) OF WORK
- ❑ Floors swept clean of combustibles
- ❑ Combustible floors wet down, covered with damp sand, metal, or other shields
- ❑ All wall and floor openings covered
- ❑ Covers suspended beneath work to collect sparks

WORK ON WALLS OR CEILINGS
- ❑ Construction noncombustible and without combustible covering
- ❑ Combustibles moved away from opposite side of wall

WORK ON ENCLOSED EQUIPMENT
(Tanks, containers, ducts, dust collectors, etc.)
- ❑ Equipment cleaned of all combustibles
- ❑ Containers purged of flammable vapors

FIRE WATCH
- ❑ To be provided during and 30 minutes after operation
- ❑ Supplied with a fully charged and operable fire extinguisher
- ❑ Trained in use of equipment and in sounding fire alarm

FINAL CHECK
- ❑ To be made 30 minutes after completion of any operation unless fire watch is provided

Signed _____
Permit Authorizing Individual (PAI)

FIGURE A.41.3.3.1(a) Sample of a Hot Work Permit. [51B:Figure A.5.3.1(a)]

on construction or agricultural equipment on site. The committee for NFPA 51B recognizes that it is not always practical to have more than one individual present, and completing a job with one person is a common practice. The committee for NFPA 51B stresses that it is always better to have more than one individual present to ensure fire safety, but realizes that it is not always practical to do so. [51B: A.6.1]

A.41.5.5.2.3 The preferred location for cylinder storage is in an approved storage area outdoors. [51B: A.7.5.2.3]

A.42.2.1.3 See NFPA 52 and NFPA 58 for requirements for facilities where only these fuels are dispensed. [30A: A.1.1.2]

A.42.2.3.3.2 PEI RP200, *Recommended Practices for Installation of Aboveground Storage Systems for Motor Vehicle Fueling*, also provides information on this subject. [30A: A.4.3.2]

A.42.2.3.8.2 The top of the posts should be set not less than 3 ft (0.9 m) above ground and should be located not less than 5 ft (1.5 m) from the tank. Other approved means to protect tanks subject to vehicular damage include vehicle impact resistance testing such as that prescribed in UL 2085, *Standard for Insulated Aboveground Tanks for Flammable and Combustible Liquids*, for protected aboveground tanks. [30A: A.4.3.7.2]

A.42.2.3.9 Appropriate corrosion control standards include the following:

(1) STI RP 892-91, *Recommended Practice for Corrosion Protection of Underground Piping Networks Associated with Liquid Storage and Dispensing Systems*

(2) STI RP-01-69, *Recommended Practice for Control of External Corrosion of Underground or Submerged Metallic Piping Systems*

(3) STI RP 1632, *Cathodic Protection of Underground Petroleum Storage Tanks and Piping Systems* [30A: A.4.3.8]

A.42.2.5.6.3 The flow of fuel can be stopped by dispensers used in self-serve motor fuel dispensing facilities. The nozzle can be returned to the dispenser in the latched-open position. Subsequent activation of the dispenser would then immediately release fuel from the latched-open nozzle, creating a hazardous situation. [30A: A.6.6.3]

A.42.2.6.1.4.1 Additional fire protection considerations can include items such as fixed suppression systems, automatic fire detection, manual fire alarm stations, transmission of alarms to off-site locations, and limiting volume delivered per transaction. [30A: A.7.3.5.1]

A.42.2.6.1.5.7 Natural ventilation can normally be expected to dissipate any fuel vapors before they reach ignitable concentrations if at least two sides of the dispensing area are open to the building exterior. [30A: A.7.3.6.7]

HOT WORK PERMIT

BEFORE INITIATING HOT WORK, ENSURE PRECAUTIONS ARE IN PLACE!
MAKE SURE AN APPROPRIATE FIRE EXTINGUISHER IS READILY AVAILABLE!

This Hot Work Permit is required for any operation involving open flames or producing heat and/or sparks. This includes, but is not limited to: Brazing, Cutting, Grinding, Soldering, Thawing Pipe, Torch-Applied Roofing, and Cadwelding.

INSTRUCTIONS

A. Verify precautions listed at right (or do not proceed with the work).
B. Complete and retain this permit.

HOT WORK BEING DONE BY
☐ EMPLOYEE
☐ CONTRACTOR _____

DATE	JOB NO.

LOCATION/BUILDING & FLOOR

NATURE OF JOB/OBJECT

NAME OF PERSON DOING HOT WORK

I verify the above location has been examined, the precautions checked on the Required Precautions Checklist have been taken to prevent fire, and permission is authorized for work.

SIGNED:

PERMIT EXPIRES:	DATE	TIME AM PM

NOTE EMERGENCY NOTIFICATION ON BACK OF FORM. USE AS APPROPRIATE FOR YOUR FACILITY.

THIS PERMIT IS GOOD FOR ONE DAY ONLY!

Required Precautions Checklist

- ❑ Available sprinklers, hose streams, and extinguishers are in service/operable.
- ❑ Hot work equipment in good repair.

Requirements within 35 ft (10 m) of work
- ❑ Flammable liquids, dust, lint, and oil deposits removed.
- ❑ Explosive atmosphere in area eliminated.
- ❑ Floors swept clean.
- ❑ Combustible floors wet down, covered with damp sand or fire-resistant sheets.
- ❑ Remove other combustibles where possible. Otherwise protect with fire-resistant tarpaulins or metal shields.
- ❑ All wall and floor openings covered.
- ❑ Fire-resistant tarpaulins suspended beneath work.

Work on walls or ceilings/enclosed equipment
- ❑ Construction is noncombustible and without combustible covering or insulation.
- ❑ Combustibles on other side of walls moved away.
- ❑ Danger exists by conduction of heat into another
- ❑ Enclosed equipment cleaned of all combustibles.
- ❑ Containers purged of flammable liquids/vapors.

Fire watch/hot work area monitoring
- ❑ Fire watch will be provided during and for 30 minutes after work, including any coffee or lunch breaks.
- ❑ Fire watch is supplied with suitable extinguishers.
- ❑ Fire watch is trained in use of this equipment and in sounding alarm.
- ❑ Fire watch may be required for adjoining areas, above, and below.
- ❑ Monitor hot work area for 30 minutes after job is completed.

Other precautions taken
- ❑ Confined space entry permit required.
- ❑ Area protected with smoke or heat detection.
- ❑ Ample ventilation to remove smoke/vapor from work area.
- ❑ Lockout/tagout required.

Note: When used in accordance with NFPA 51B, this permit is to be used for, but not limited to, the following: welding, cutting, grinding, open-flame soldering, thawing pipe, and torch-applied roofing.

FIGURE A.41.3.3.1(b) Another Sample of a Hot Work Permit. (©1992, Factory Mutual Engineering Corporation. Reprinted with Permission.) [51B:Figure A.5.3.1(b)]

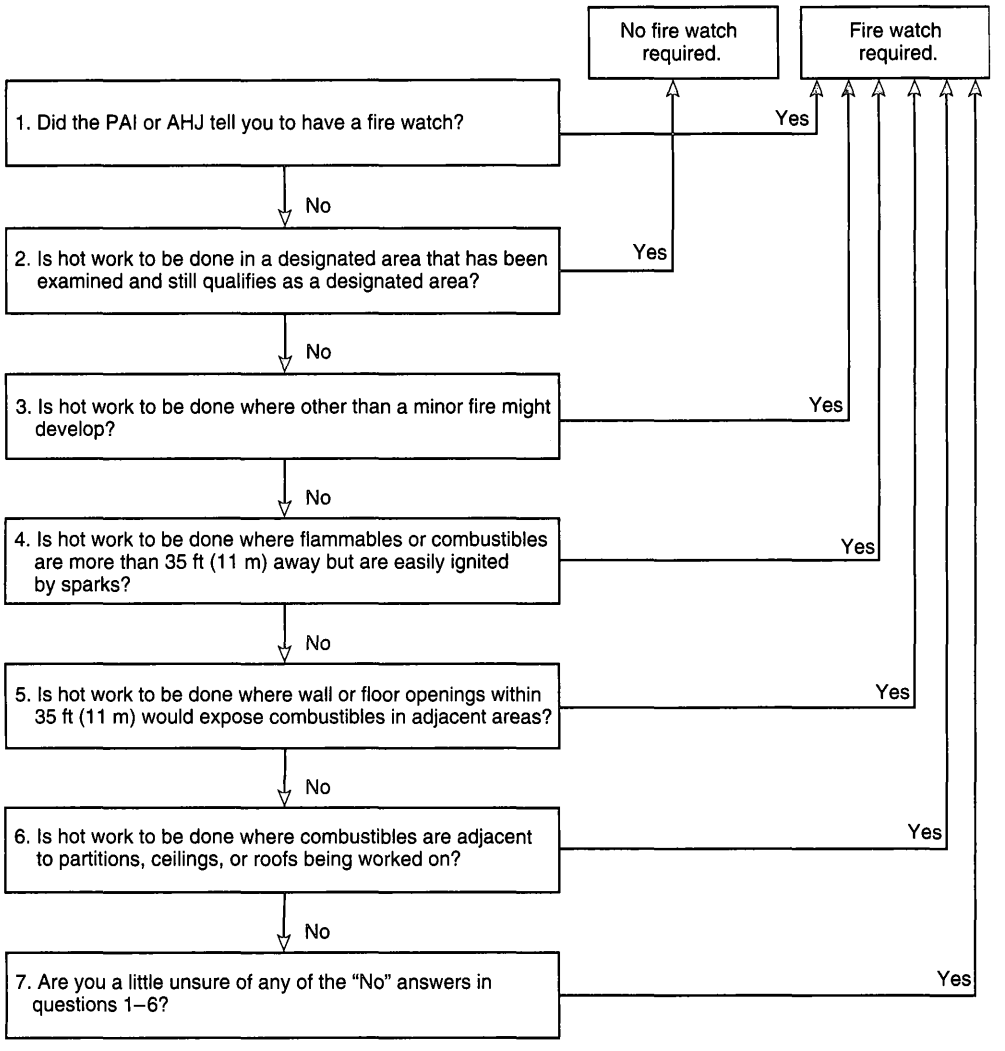

FIGURE A.41.3.4.1 Fire Watch Decision Tree. [51B:Figure A.5.4.1]

A.42.2.6.1.5.9 Oil/water separators might not be designed to remove or separate flammable or combustible liquids other than oil. [30A: A.7.3.6.9]

A.42.2.6.2 The ventilation requirements contained in this paragraph do not consider exhaust emissions from motor vehicle engines. An appropriate professional should be consulted to determine precautions necessary to protect against this health hazard. [30A: A.7.5]

A.42.2.6.2.1 Manual control switches for supply and exhaust ventilating systems should be located close to the entrance to the area served. In buildings protected by automatic sprinklers or fire alarm systems, it is recommended that the necessary interlocks be provided to shut down supply and exhaust fans when the sprinklers or fire alarms operate. For service facilities for CNG-fueled vehicles and LNG-fueled vehicles, see NFPA 52 or, whichever is appropriate. [30A: A.7.5.1]

A.42.2.6.3.6 Enclosed rooms or spaces should prohibit the transmission of gases from the room or space repairing or storing CNG- or LNG-fueled vehicles to other areas of the building. Other areas outside of the enclosure, if not repairing or storing CNG- or LNG-fueled vehicles, can use other heating methods. Note that, according to A.1.1 of NFPA 52, CNG weighs about two-thirds that of air and, therefore, as a gas, will rise in a room. LNG at a temperature of less than or equal to –170°F (–112°C) is heavier than ambient air [at 60°F (15°C)], but as the LNG's temperature rises, it becomes lighter than air. Determination of the potential for gas accumulation should be based on an engineering analysis. (Guidance for classification of hazardous locations is available in NFPA 497.) [30A: A.7.6.6]

A.42.2.7.2.1 API RP 1621, *Recommended Practice for Bulk Liquid Stock Control at Retail Outlets*, provides information on this subject. [30A: A.9.2.1]

A.42.2.7.2.3.1 See Section 6.2 of NFPA 30 for further information. [30A: A.9.2.3.1]

A.42.2.7.2.5.4 The following language includes both the mandatory requirements and some optional text that could be used to comply with the requirements in 42.2.7.2.5.4:

WARNING

It is unlawful and dangerous to dispense gasoline into unapproved containers.

No smoking.

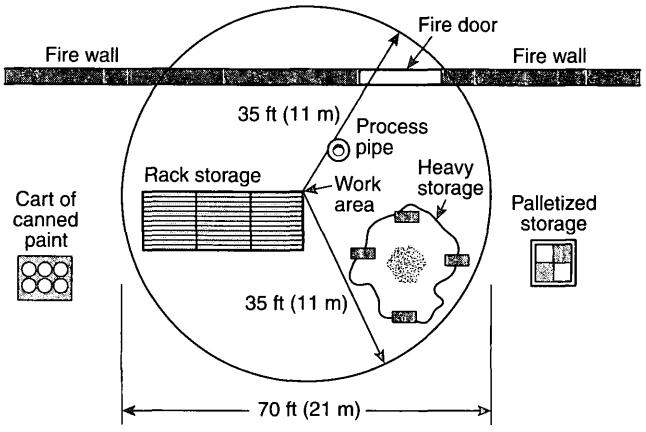

- Remove or shield from sparks all potential fuels within 35 ft (11 m) of the work area. (In this case, the paint cart and palletized storage have been moved.)
- Empty racks on which the work is to be done of all storage.
- Close fire doors and seal floor openings such as the area surrounding process piping with noncombustible caulking.
- Cover heavy combustible storage that is impractical to move with the fire-resistive tarpaulin.

FIGURE A.41.3.4.1(1) The Hot Work 35 ft (11 m) Rule. (Courtesy of Factory Mutual Engineering Corporation.) [51B:Figure A.5.4.1(1)]

Stop motor.
No filling of portable containers in or on a motor vehicle.
Place container on ground before filling.
Discharge your static electricity before fueling by touching a metal surface away from the nozzle.
Before using pump, touch any metal on the car away from your vehicle's fuel filler with bare hand. This will discharge static electricity on your body. Failure to fully discharge may ignite gasoline vapors.
Do not re-enter your vehicle while gasoline is pumping. This can re-charge your body with static electricity. If you must re-enter your vehicle, discharge static electricity again before touching the pump nozzle.
If a fire starts, **do not** remove nozzle — back away immediately and tell attendant. If no attendant is on site, use the emergency shut-off button to stop pump.
Do not allow individuals under licensed age to use the pump.
Only persons of licensed age should use pump.
Keep children away from the pump area.
Do not allow children to use pump. [**30A:**9.2.5.4]

A.42.2.7.5.6 Additional fire protection considerations can include fixed suppression systems, automatic fire detection, manual fire alarm stations, transmission of alarms to off-site locations, and limitation of the quantity of motor fuel delivered per transaction. [**30A:** A.9.5.6]

A.42.2.8.3.3 The selection of the 50 ft (15 m) separation distance for gaseous fuels is based on the existing separation requirements prescribed in NFPA 30A. No technical data were available to support different separation distances, and the 50 ft (15 m) distance was considered reasonable and conservative, based on the information available to the Technical Committee on Automotive and Marine Service Stations at the time. [**30A:** A.12.3.3]

A.42.2.8.6.2 The designation of classes and divisions of classified locations is defined in Chapter 5, Article 500, of NFPA 70. [**30A:** A.12.6.2]

A.42.3.2.2 Cases where the length of the supply line to dispensing devices would result in insufficient pressure for operational purposes or would increase the potential for leakage due to the increased number of fittings or exposure of the line can warrant location of the supply on the pier. [**30A:** A.11.2.2]

A.42.3.6.2 NFPA 77 contains information on this subject. [**30A:** A.8.5.2]

A.42.3.6.4 Where excessive stray currents are encountered, piping handling Class I and Class II liquids should be electrically isolated from the shore piping. This requirement prevents stray currents originating in the vessel's electrical system from causing an electrical arc or spark. [**30A:** A.11.6]

A.42.3.6.4.1 NFPA 77 contains information on this subject. [**30A:** A.11.6.1]

A.42.3.8.2 See 6.2.1 of NFPA 30 for further information. [**30A:** A.11.8.2]

A.42.4.2.1.2.5 The charge on the fuel can be reduced by the use of a static dissipater additive that increases the electrical conductivity of the fuel and thereby allows the charge to relax or dissipate more quickly, or by the use of a relaxation chamber that increases the residence time of the fuel downstream of the filter to at least 30 seconds, thereby allowing most of the charge to dissipate before the fuel arrives at the receiving tank.

API RP 2003, *Protection Against Ignitions Arising Out of Static, Lightning, and Stray Currents*, recommends a 30-second relaxation time for loading tank trucks and refuelers. However, it has not been a common practice to require a similar relaxation time for aircraft refueling, primarily because of the relatively few electrostatic incidents that have occurred during aircraft fueling.

In filling tank trucks or storage tanks, API RP 2003 recommends that at least 30 seconds of residence time be provided downstream of a filter in order to allow static charges generated in flowing fuel to relax before fuel enters the tank.

The reason it is possible to fuel aircraft safely with low conductivity fuel without providing 30 seconds of relaxation time is due primarily to the difference in the geometry of aircraft tanks as compared with tank truck compartments. Flow into the aircraft normally is subdivided into several tanks simultaneously and also distributed into adjoining compartments of each tank by a multihole inlet. Bachman and Dukek (1972) conducted full-scale research using a simulated large aircraft tank and concluded that none of the tanks or compartments hold sufficient fuel to allow enough charges to accumulate and create large surface voltages. Slower fill rates per compartment also allow more charge to relax.

Additionally, the inlet system of most aircraft tanks directs fuel towards the bottom of the tank to avoid splashing that generates more charge. Finally, while the hose that connect the fueler to the aircraft provide only a few seconds of residence time for charge relaxation at high rates of flow, the actual relaxation volume in the system is significantly greater where a coated screen is used as a second stage water barrier. In this case, the vessels volume after the first stage filter coalescer could represent an additional 15 seconds of residence

time for charge relaxation. (The coated screen, unlike other water barriers, does not generate charge.)

A flammable vapor space in the tank due to the presence of JET B or JP-4 fuels still constitutes a potential hazard. Therefore, to minimize the chance for static ignition, FAA regulations require that fueling be conducted at half of the rated flow where civil aircraft have used such fuels. [407: A.4.1.2.5]

A.42.4.2.1.5 *Radar Ignition Hazards.* The beam of radar equipment has been known to cause ignition of flammable vapor–air mixtures from inductive electric heating of solid materials or from electrical arcs or sparks from chance resonant conditions. The ability of an arc to ignite flammable vapor–air mixtures depends on the total energy of the arc and the time lapse involved in the arc's duration, which is related to the dissipation characteristics of the energy involved. The intensity or peak power output of the radar unit, therefore, is a key factor in establishing safe distances between the radar antenna and fueling operations, fuel storage or fuel loading rack areas, fuel tank truck operations, or any operations where flammable liquids and vapors could be present or created.

Most commercially available weather-mapping airborne radar equipment operates at peak power outputs, varying from 25 kW to 90 kW. Normally this equipment should not be operated on the ground. Tests have shown that the beam of this equipment can induce energy capable of firing flash bulbs at considerable distances. If the equipment is operated on the ground for service checking or for any other reason, the beam should not be directed toward any of the hazards described in the previous paragraph that are located within 100 ft (30 m). (WARNING: Higher power radar equipment can require greater distances.)

Airport surface detection radar operates under a peak power output of 50 kW. It is fixed rather than airborne equipment.

Airborne surveillance radar of the type currently carried on military aircraft has a high peak power output. Aircraft carrying this type of radar can be readily distinguished by radomes atop or below the fuselage, or both.

Aircraft warning radar installations are the most powerful. Most of these installations are, however, remotely located from the hazards specified in the first paragraph and therefore are not covered herein. Ground radar for approach control or traffic pattern surveillance is considered the most fire hazardous type of radar normally operating at an airport. The latter type of equipment has a peak power output of 5 MW. Where possible, new installations of this type of equipment should be located at least 500 ft (150 m) from any of the hazards described in the first paragraph. [407: A.4.1.4.2]

A.42.4.2.1.7.1 Multipurpose dry chemical (ammonium phosphate) should not be selected due to corrosion concerns relative to the agent. Carbon dioxide extinguishers should not be selected due to their limited range and effectiveness in windy conditions. [407: A.4.1.6.1]

A.42.4.2.2.4 *Electrical Equipment in Aircraft Fuel Servicing Vehicle or Cart Engine Compartments.* Equipment contained in the engine compartment or vehicle cab and located 18 in. (457 mm) or more above ground can be permitted to be of the general purpose type. [407: A.4.3.7.4]

A.42.4.3.3.1 *Optional Guidance on Fuel Storage Tanks.* Where pressure tanks are used, details on construction, spacing, and location should be in accordance with industry good practice and approved by the AHJ. When AVGAS, MOGAS, or JET B turbine fuels are stored in bulk quantities in aboveground tanks, they should be stored in floating roof-type tanks. Covered floating roof tanks minimize the hazardous flammable vapor–air space above the liquid level. The vapor spaces of underground tanks storing fuels should not be interconnected. [407: A.4.4.4.1]

A.42.4.5.2 *Handling Fuel Spills.* The following actions are appropriate in the event of a fuel spill, although each spill should be treated as an individual case due to such variables as the size of the spill, type of flammable or combustible liquid involved, wind and weather conditions, equipment arrangement, aircraft occupancy, emergency equipment, and personnel available:

(1) The flow of fuel should be stopped, if possible. If the fuel is discovered leaking or spilling from fuel servicing equipment or hose, the emergency fuel shutoff should be operated at once. If the fuel is discovered leaking or spilling from the aircraft at the filler opening, vent line, or tank seams during fueling operations, fueling should be stopped immediately. Evacuation of the aircraft should be ordered when necessary. The aircraft then should be thoroughly checked for damage or entrance of flammable liquid or vapors into any concealed wing or fuselage area, and corrective action should be taken as necessary before it is returned to normal operational service.
(2) The airport fire crew should be notified if the spill presents a fire hazard. The only routine exceptions are for small spills. Supervisory personnel should be notified to ensure that operations in progress can be continued safely or halted until the emergency is past and that corrective measures can be taken to prevent recurrence of a similar accident.
(3) It could be necessary to evacuate the aircraft if the spill poses a serious fire exposure to the aircraft or its occupants. Walking through the liquid area of the fuel spill should not be permitted. Persons who have been sprayed with fuel or had their clothing soaked with fuel should go to a place of refuge, remove their clothing, and wash. Individuals whose clothing has been ignited should be wrapped in blankets, coats, or other items or should be told to or forced to roll on the ground.
(4) Mobile fueling equipment and all other mobile equipment should be withdrawn from the area or left as is until the spilled fuel is removed or made safe. No fixed rule can be made as fire safety varies with circumstances. Shutting down equipment or moving vehicles can provide a source of ignition if no fire immediately results from the spillage.
(5) Aircraft, automotive, or spark-producing equipment in the area should not be started before the spilled fuel is removed or made safe. If a vehicle or cart engine is running at the time of the spill, it normally is good practice to drive the vehicle away from the hazard area unless the hazard to personnel is judged too severe. Fuel servicing vehicles or carts in operation at the time of the spill should not be moved until a check is made to verify that any fuel hose that could have been in use or connected between the vehicle and the aircraft is safely stowed.
(6) If any aircraft engine is operating at the time of the spill, it normally is good practice to move the aircraft away from the hazard area unless air currents set up by operating power plants would aggravate the extent or the nature of the existing vapor hazard.

(7) If circumstances dictate that operating internal combustion engine equipment within a spill area that has not ignited should be shut down, engine speeds should be reduced to idle prior to cutting ignition in order to prevent backfire.
(8) The volatility of the fuel can be a major factor in the initial severity of the hazard created by a spill. Gasoline and other low flash point fuels at normal temperatures and pressures produce vapors that are capable of forming ignitible mixtures with the air near the surface of the liquid, whereas this condition does not normally exist with kerosene fuels (JET A or JET A-1) except where ambient temperatures are 100°F (38°C) or above or where the liquid has been heated to a similar temperature.
(9) Spills of gasoline and low flash point turbine fuels (JET B) greater than 10 ft (3 m) in any dimension and covering an area of over 50 ft^2 (5 m^2) or that are of an ongoing nature should be blanketed or covered with foam. The nature of the ground surface and the existing exposure conditions dictate the exact method to be followed. Such fuels should not be washed down sewers or drains. The decision to use a sewer or drain should be made only by the chief of the airport fire brigade or the fire department. If fuels do enter sewers, either intentionally or unintentionally, large volumes of water should be introduced to flush such sewers or drains as quickly as possible to dilute the flammable liquid content of the sewer or drain to the maximum possible extent. Normal operations involving ignition sources (including aircraft and vehicle operations) should be prohibited on surface areas adjacent to open drains or manholes from which flammable vapors could issue due to the introduction of liquids into the sewer system until it can be established that no flammable vapor–air mixture is present in the proximity. (NOTE: NFPA 415, *Standard on Airport Terminal Buildings, Fueling Ramp Drainage, and Loading Walkways,* provides further information on aircraft fueling ramp drainage designs to control the flow of fuel that could be spilled on a ramp and to minimize the resulting possible danger.)
(10) Spills of kerosene grades of aviation fuels (JET A or JET A-1) greater than 10 ft (3 m) in any dimension and covering an area of over 50 ft^2 (5 m^2) or that are of an ongoing nature and that have not ignited should be blanketed or covered with foam if there is danger of ignition. If there is no danger of ignition, an absorbent compound or an emulsion-type cleaner can be used to clean the area. Kerosene does not evaporate readily at normal temperatures and should be cleaned up. Smaller spills can be cleaned up using an approved, mineral-type, oil absorbent.
(11) Aircraft on which fuel has been spilled should be inspected thoroughly to ensure that no fuel or fuel vapors have accumulated in flap well areas or internal wing sections not designed for fuel tankage. Any cargo, baggage, express, mail sacks, or similar items that have been wetted by fuel should be decontaminated before being placed aboard any aircraft. [**407:** A.5.2]

A.42.4.5.4 *Bonding.* Hydrocarbon fuels, such as aviation gasoline and JET A, generate electrostatic charge when passing through the pumps, filters, and piping of a fuel transfer system. (The primary electrostatic generator is the filter/separator that increases the level of charge on a fuel by a factor of 100 or more as compared with pipe flow.) Splashing, spraying, or free-falling of the fuel further enhances the charge. When charged fuel arrives at the receiving tank (cargo tank or aircraft fuel tank) one of two possible events will occur:

(1) The charge will relax harmlessly to ground.
(2) If the charge or the fuel is sufficiently high, a spark discharge can occur. Whether or not an ignition follows depends on the energy (and duration) of the discharge and the composition of the fuel/air mixture in the vapor space (i.e., whether or not it is in the flammable range).

The amount of charge on a fuel when it arrives at the receiving tank, and hence its tendency to cause a spark discharge, depends on the nature and amount of impurities in the fuel, its electrical conductivity, the nature of the filter media (if present), and the relaxation time of the system [i.e., the residence time of the fuel in the system between the filter (separator) and the receiving tank]. The time needed for this charge to dissipate is dependent upon the conductivity of the fuels; it could be a fraction of a second or several minutes.

No amount of bonding or grounding prevents discharges from occurring inside of a fuel tank. Bonding ensures that the fueling equipment and the receiving tank (aircraft or fueler) are at the same potential and provides a path for the charges separated in the fuel transfer system (primarily the filter/separator) to combine with and neutralize the charges in the fuel. Also, in overwing fueling and in top loading of cargo tanks, bonding ensures that the fuel nozzle or the fill pipe is at the same potential as the receiving tank, so that a spark does not occur when the nozzle or fill pipe is inserted into the tank opening. For this reason, the bonding wire must be connected before the tank is opened.

Grounding during aircraft fueling or refueler loading is no longer required because of the following:

(1) It does not prevent sparking at the fuel surface. *(See* NFPA 77, *Recommended Practice on Static Electricity.)*
(2) It is not required by NFPA 77.
(3) The static wire might not be able to conduct the current in the event of an electrical fault in the ground support equipment connected to the aircraft and could constitute an ignition source if the wire fuses. If ground support equipment is connected to the aircraft or if other operations are being conducted that necessitate electrical earthing, then separate connections should be made for this purpose. Static electrical grounding points can have high resistance and, therefore, are unsuitable for grounding. For a more complete discussion of static electricity in fuels, see NFPA 77. [**407:** A.5.4]

A.42.4.5.4.3 Ordinary plastic funnels or other nonconducting materials can increase static generation. The use of chamois as a filter is extremely hazardous. [**407:** A.5.4.3]

A.42.4.5.7 *Electric Hand Lamps.* Electric hand lamps used in the immediate proximity of the fueling operation should be of the type approved for use in NFPA 70, Class I, Division 1, Group D hazardous locations. There is no supportable basis for requiring in the petroleum industry the use of approved, listed, or permitted two- or three-cell flashlights to avoid igniting Class I, Group D vapors. [**407:** A.5.7]

A.42.4.5.7.2 *Aircraft Ground-Power Generators.* Aircraft ground-power generators should be located as far as practical from aircraft fueling points and tank vents to reduce the danger of igniting flammable vapors that could be discharged during fueling operations at sparking contacts or on hot surfaces of the generators. [**407:** A.5.7.2]

A.42.4.5.9 It is impossible to establish precise rules for fueling when there are electrical storms in the vicinity of the airport. The distance of the storm from the airport, the direction in which it is traveling, and its intensity are all factors to be weighed in making the decision to suspend fueling operations temporarily. Experience and good judgment are the best guides. Sound travels approximately ⅕ mi/sec (322 m/sec). The approximate number of miles to the storm can be determined by counting the seconds between a flash of lightning and the sound of thunder and dividing by 5. [**407:** A.5.9]

A.42.4.5.10.2 *Aircraft Fuel Servicing Locations.* The precautions in 42.4.5.10.2 are intended to minimize the danger of the ignition of any flammable vapors discharged during fueling and of fuel spills by sources of ignition likely to be present in airport terminal buildings. [**407:** A.5.10.2]

A.42.4.5.13 *Portable Fire Extinguishers on Aircraft Servicing Ramps or Aprons.* Fire extinguishers for ramps where fueling operations are conducted are intended to provide an immediate means of fire protection in an area likely to contain a high concentration of personnel and valuable equipment. The prominent and strategic positioning of portable fire extinguishers is essential in order for them to be of a maximum value in the event of an emergency. Extinguishers should not be located in probable spill areas. For normal, single parking configurations, extinguishers specified for protection of fuel servicing operations should be located along the fence, at terminal building egress points, or at emergency remote control stations of airport fixed-fuel systems. To provide accessibility from adjoining gates, particularly where more than one unit is specified, extinguishers can be permitted to be located approximately midway between gate positions. Where this is done, the maximum distance between extinguishers should not be over 300 ft (90 m). Where the specified extinguishers are not located along the fence but are brought into the servicing area prior to the fueling operation, they should be located upwind not over 100 ft (30 m) from the aircraft being serviced. For protection of fuel servicing of aircraft that are double parked or triple parked, extinguishers should be located upwind not over 100 ft (30 m) from the aircraft being serviced. [**407:** A.5.13]

A.42.4.5.13.5 *Protection of Extinguishers Against Inclement Weather.* During inclement weather, extinguishers not in enclosed compartments shall be permitted to be protected by canvas or plastic covers. If icing occurs, the extinguisher should be sprayed with deicing fluid. [**407:** A.5.13.5]

A.42.4.5.13.6 *Training of Personnel in the Utilization of Extinguishers.* Fuel servicing personnel should be given adequate training with extinguishers so that such equipment is used effectively in an emergency. Such training should be given on fires of the type that could be encountered on the job. To ensure prompt action in the event of a spill or other hazardous condition developing during fueling operations, aircraft servicing personnel also should be trained in the operation of emergency fuel shutoff controls. Each new fuel servicing employee should be given indoctrination training covering these and similar safety essentials that are related to the job. Follow-up and advanced training should be given as soon as the employee is sufficiently acquainted with the work to benefit from such training. Supervisors should be given training in the more technical aspects of fire safety so that they understand the reason for these and similar requirements and have an appreciation for the responsibility of a supervisor or the safety of an operation. [**407:** A.5.13.6]

A.42.4.5.16 Failure of aircraft fueling hose in service is a potential source of fuel spillage and a potential fire hazard. The principal reasons for failure of aircraft fueling hose include the following:

(1) Using damaged hose
(2) Using aged hose
(3) Exceeding pressure limits
(4) Improper installation [**407:** A.5.16]

A.42.4.5.16.4 Splicing of a hose with couplings alters the design bend radius of the hose, creating two kinks when the hose is wound on a drum. [**407:** A.5.16.4]

A.42.4.5.21.2(2) If passengers remain onboard an aircraft during fuel servicing, at least one person trained in emergency evacuation procedures is required to be aboard. *(See 42.4.5.11.1.)* It is not intended that the pilot in command perform this function. [**407:** A.5.21.2(2)]

A.42.5.1.1 Natural gas is a flammable gas. It is colorless, tasteless, and nontoxic. It is a light gas, weighing about two-thirds as much as air. As used in the systems covered by this standard, it tends to rise and diffuses rapidly in air when it escapes from the system.

Natural gas burns in air with a luminous flame. At atmospheric pressure, the ignition temperature of natural gas–air mixtures has been reported to be as low as 900°F (482°C). The flammable limits of natural gas–air mixtures at atmospheric pressure are about 5 percent to 15 percent by volume natural gas.

Natural gas is nontoxic but can cause anoxia (asphyxiation) when it displaces the normal 21 percent oxygen in air in a confined area without adequate ventilation.

Hydrogen is a colorless gas with no odor. It is not toxic; the immediate health hazard is that it can cause thermal burns. It is flammable and can form mixtures with air that are flammable or explosive. Hydrogen can react violently if combined with oxidizers, such as air, oxygen, and halogens. Hydrogen is an asphyxiant and can displace oxygen in a workplace atmosphere. The concentrations at which flammable or explosive mixtures form are much lower than the concentration at which asphyxiation risk is significant.

NFPA 704, *Standard System for the Identification of the Hazards of Materials for Emergency Response,* rating is as follows:

(1) Health — 0
(2) Flammability — 4
(3) Reactivity — 0
(4) Special — None

Hydrogen is not toxic by any route. Asphyxia can result if the oxygen concentration is reduced to below 18 percent by displacement. None of the available data indicate toxicity for exposures of any duration. Asphyxiation is the primary health risk. No detrimental effects of skin contact or eye contact have been reported. Ingestion is not an observed route of exposure to gaseous hazardous materials.

Hydrogen Data and Physical Properties. The following information provides basic physical property data and regulatory guidance:

(1) Flash point: Not applicable (This material is a gas.)
(2) Flammability limits in air: 4.0% to 75.0%
(3) Autoignition temperature: 932°F (500°C)
(4) Flammability classification (per 29 CFR 1910.1200): Flammable gas
(5) Known or anticipated hazardous products of combustion: None

Cryogenic fluids are gases that have been liquefied by having their temperature brought below –130 F (-90 C). They are typically stored at low pressures in vacuum jacketed containers. Some of the potential hazards of cryogenic fluids are the following:

(1) Extreme cold that freezes or damages human skin on contact and can embrittle metals
(2) Extreme pressure resulting from rapid vaporization of the fluid during a leak or release of the cryogenic fluid
(3) Asphyxiation resulting from a release of the cryogenic fluid that vaporizes and displaces air

Personnel handling cryogenic fluids should use the protective clothing proscribed on the material safety data sheet (MSDS). This clothing typically includes heavy leather gloves, aprons, and eye protection. [**52:** A.1.1]

A.42.5.1.1.2 Current DOT and TC specifications, exemptions, and specific permits do not address the use of cylinders that are approved for the transportation of natural gas to be used in CNG service.

The following Compressed Gas Association publications are four relevant cylinder inspection standards:

(1) CGA C-6, *Standards for Visual Inspection of Steel Compressed Gas Cylinders*
(2) CGA C-6.1, *Standards for Visual Inspection of High Pressure Aluminum Compressed Gas Cylinders*
(3) CGA C-6.2, *Guidelines for Visual Inspection and Requalification of Fiber Reinforced High Pressure Cylinders*
(4) CGA C-10, *Recommended Procedures for Changes of Gas Service for Compressed Gas Cylinders* [**52:** A.4.4.4]

A.42.5.2.2.1 Chapter 11 of NFPA 58 covers engine fuel systems for engines installed on vehicles for any purpose, as well as fuel systems for stationary and portable engines. [**58:** A.11.1.1]

A.42.5.2.2.2 Containers for engine fuel systems can be of the permanently installed or exchange type. [**58:** A.11.1.2]

A.42.5.2.4.2.2 See Figure A.42.5.2.4.2.2. [**58:** A.11.11.2.2]

FIGURE A.42.5.2.4.2.2 Example of Vehicle Identification Marking. [58:Figure A.11.11.2.2]

A.42.5.3 For information on on-site storage of LNG in ASME tanks larger than 70,000 gal (265 m^3) and in tanks built to API or other standards, see NFPA 59A, *Standard for the Production, Storage, and Handling of Liquefied Natural Gas (LNG).*

Prior to the time NFPA 52 was developed, the use of LNG as an aviation fuel, fueling site liquefaction facilities, and the use of residential LNG fueling facilities were not being considered actively. The NFPA 52 committee intends to provide coverage for these applications at the appropriate time.

A.43.1.1 The risk to life and property because of the fire and explosion hazards of spray application of flammable and combustible materials will vary depending on the arrangement and operation of the particular process and on the nature of the material being sprayed. The principal hazards addressed in this *Code* are those of the materials being sprayed: flammable and combustible liquids and combustible powders, as well as their vapors, mists, and dusts, and the highly combustible deposits and residues that result from their use. Properly designed, constructed, and ventilated spray areas are able to confine and control combustible residues, dusts, or deposits and to remove vapors and mists from the spray area and discharge them to a safe location, thus reducing the likelihood of fire or explosion. Likewise, accumulations of overspray residues, some of which are not only highly combustible but also subject to spontaneous ignition, can be controlled.

The control of sources of ignition in spray areas and in areas where flammable and combustible liquids or powders are handled, together with constant supervision and maintenance, is essential to safe spray application operations. The human element requires careful consideration of the location of spray application operations and the installation of fire-extinguishing systems so that the potential for spread of fire to other property and damage to property by extinguishing agent discharge is reduced. [**33:** A.1.1]

A.43.1.1.2(1) This *Code* does not cover spray application operations that are conducted outdoors on buildings, bridges, tanks, or similar structures. These situations occur only occasionally for any given structure and overspray deposits are not likely to present a hazardous condition. Also, the space where there might be an ignitable vapor–air or dust–air mixture is very limited due to atmospheric dilution. [**33:** A.1.1.4]

A.43.1.1.2(2) The occasional use of small portable spray equipment or aerosol spray containers is not likely to result in hazardous accumulations of overspray. Therefore, such operations are not within the scope of this *Code.* The following safeguards, however, should be observed:

(1) Adequate ventilation should be provided at all times, particularly when spray application is conducted in relatively small rooms or enclosures.
(2) Spray application should not be conducted in the vicinity of open flames or other sources of ignition. Either the spray operation should be relocated or the source of ignition should be removed or turned off.
(3) Containers of coating materials, thinners, or other hazardous materials should be kept tightly closed when not actually being used.
(4) Oily or coating-laden rags or waste should be disposed of promptly and in a safe manner at the end of each day's operations, due to the potential for spontaneous ignition.
(5) The same fundamental rules for area cleanliness and housekeeping that are required for industrial spray application operations should be observed. [**33:** A.1.1.5]

A.43.1.2.1 Fires involving spray application operations and processes can be expected to develop rapidly and to generate

copious quantities of heat and smoke. In sprinklered buildings, such fires can also result in the operation of a greater-than-normal number of sprinklers. The following guidance is offered:

(1) Operations and equipment should be arranged and located so that there is adequate egress for personnel and adequate access for fire-fighting operations. Where spray application operations are extensive, they should be located in a separate building or in an area that is separated by fire-rated construction from all other operations or storage.
(2) Spray application operations that incorporate assembly lines or conveyor systems will present special problems. If conveyor systems extend between separate buildings, a noncombustible or limited-combustible, sprinkler-protected enclosure or passageway might be of value. If conveyor systems pass through floors, the openings should be surrounded by deep [greater than 18 in. (460 mm)] draft curtains on the underside of the floor deck and might even be provided with automatic high-velocity spray nozzles arranged to create a counter draft. If conveyor systems pass through fire walls or fire partitions, it will be difficult to reliably protect the openings by means of automatic-closing fire doors. One option is to provide a noncombustible or limited-combustible, sprinkler-protected tunnel on both sides of the opening.
(3) Rooms that house spray application operations should be separated from other occupancies or operations by construction that meets the requirements of Chapter 5 of NFPA 33.
(4) In sprinklered buildings, where spray application operations occupy one portion of an open area, the spray application operations should be surrounded by noncombustible or limited-combustible draft curtains extending downward at least 18 in. (460 mm) from the ceiling, but deeper if practical. These draft curtains will aid in minimizing the number of sprinkler heads that open beyond the area of primary concern. Additional consideration might be given to the use of heat and smoke vents to aid in fire control.
(5) Sprinkler discharge should be drained to the outside of the building, to an internal drain system, or to some other suitable location. Properly designed and installed floor drains and scuppers of sufficient number and size to handle expected sprinkler discharge should be provided. Where spray application operations are located on an upper floor, they should not be located directly above goods or equipment that are subject to water damage. In addition, the floor should be made watertight and means should be provided to drain sprinkler discharge directly from the area.
(6) Finally, spray application operations should not be located in a basement area. [**33:** A.4.1]

A.43.1.3.1 Spray booths can be of a wide variety of shapes and sizes to accommodate the various industrial applications of spray application. Without the use of a spray booth, the spray area, as defined in 3.3.13.11, can constitute a considerable area, with all the requirements for a spray area then becoming applicable. It is important that only equipment suitable for specific purposes be utilized in connection with the handling and application of flammable or combustible liquids or powders. [**33:** A.5.1]

A.43.1.3.3 The other operations referred to in 43.1.3.3 are those that do not involve spray application processes. [**33:** A.5.3]

A.43.1.4.1 Because of the requirements for special safeguards, electrostatic apparatus, drying, curing, and fusing apparatus, and vehicle undercoating and body lining operations are covered in other chapters of NFPA 33. [**33:** A.6.2]

A.43.1.4.1.2 In the Division system, areas are classified as either Division 1 or Division 2 depending on whether ignitable gases or vapors are always present or likely to be present (Division 1) or whether ignitable gases or vapors are not normally present (Division 2). The Zone system identifies hazardous locations as Zone 0, Zone 1, or Zone 2, depending on whether the ignitable atmosphere will always be present (Zone 0), is likely to be present (Zone 1), or is not normally present (Zone 2). The Zone system is based on International Electrotechnical Commission (IEC) standards and was incorporated into NFPA 70 in 1996.

Although there are requirements in international standards for Zone classification of dust locations, NFPA 70 only permits ignitable gas and vapor atmospheres to be classified using the Zone system. Therefore, powder coating applications are not permitted to be classified using the Zone system. [**33:** A.6.2.2]

A.43.1.4.1.5 There should be no open flames, hot surfaces, or spark-producing equipment in the spray area or in any area where they might be exposed to combustible residues. Open flames or spark-producing equipment should not be located where they can be exposed to deposits of combustible residues. Some residues can be ignited at low temperatures, such as those produced by steam pipes, incandescent light fixtures, and power tools. [**33:** A.6.2.5]

A.43.1.4.1.6 Areas that are above or adjacent to spray areas, where materials are located, stored, mixed, or processed, should be ventilated. Equipment that is known to produce flame, sparks, or particles of hot metal, including light fixtures, that are adjacent to areas that are safe under normal operating conditions, but which can become dangerous due to accident or careless operation, should not be installed in such areas unless the equipment is totally enclosed or is separated from the area by partitions that will prevent the sparks or particles from entering the area. [**33:** A.6.2.6]

A.43.1.4.2.1 See NFPA 70. [**33:** A.6.3.1]

A.43.1.4.2.1.1 See also 500.5(B)(1) of NFPA 70 for further information and descriptions. [**33:** A.6.3.1.1]

A.43.1.4.2.1.2 See also 500.5(B)(2) of NFPA 70 for further information and descriptions. [**33:** A.6.3.1.2]

A.43.1.4.2.1.3 See also 505.5(B)(1) of NFPA 70 for further information and descriptions. [**33:** A.6.3.1.3]

A.43.1.4.2.1.4 See also 505.5(B)(2) of NFPA 70 for further information and descriptions. [**33:** A.6.3.1.4]

A.43.1.4.2.1.5 See also 505.5(B)(3) of NFPA 70 for further information and descriptions. [**33:** A.6.3.1.5]

A.43.1.4.2.2.1 See also 500.5(C)(1) of NFPA 70 for further information and descriptions. [**33:** A.6.3.2.1]

A.43.1.4.2.2.2 See also 505.5(C)(2) of NFPA 70 for further information and descriptions. [**33:** A.6.3.2.2]

A.43.1.4.3.2 Equipment that is listed for both Class I, Division 1, Class I, Zone 1, and Class II, Division 1 locations and is also listed for accumulation of deposits of combustible residues can be installed in the spray area.

See NFPA 70. [**33:** A.6.4.2]

A.43.1.4.6 During operation of any electrostatic equipment, however, electrically conductive isolated objects within the process area are influenced by the process and can become charged to voltages that result in spark discharges capable of igniting flammable or combustible substances. Objects commonly involved in such incidents include workpieces on conveyor racks that have fouled contact points; solvent containers or tools placed on nonconducting paint residues, cardboard, or wooden rests; spray-booth components such as loose floor grates; and human beings insulated from ground by rubber footwear, paint residue accumulations on floors, and gloves.

Even in spray painting environments where there is no electrostatic equipment in operation, but where sticky, electrically nonconductive paint residues have accumulated on the floor, a significant hazard is associated with static electrification of human bodies that results from walking across such a floor. As few as two or three steps can produce sufficient voltage on the body of a worker to create an incendive spark when he or she approaches a grounded object. If this spark occurs in a flammable vapor such as is found surrounding a solvent container or a freshly painted object, a fire results. See NFPA 77 for additional information. [**33:** A.6.7]

A.43.1.5.3 *Make-up Air.* All spray areas require make-up air, and since the air exhausted from spray application operations is normally contaminated and can only be recirculated under rigidly controlled conditions, the source of the make-up air should be given careful consideration. When the capacity of the ventilating fan is low and the area where the exhaust system is located is large, sufficient make-up air can often be provided by natural infiltration of air through building walls, windows, doors, and so forth. In general, if the volume of the room or building where the exhaust system is located is not at least equal to 20 times the volumetric capacity of the fans (three air changes per hour), then additional make-up air should be provided. Outside air should be tempered and might have to be dehumidified or chilled for proper operation of the spray application apparatus. Automatic controls, including a high temperature limit switch, fan interlocks, and safety shutoff valves, should be provided for safe operation.

The method of distributing the make-up air requires careful consideration. If the velocities and distribution of air through baffles, filters, and registers have not been carefully designed, the spray application operation can be inefficient. The velocity of the air through filters, and so forth, should not exceed 200 ft/min (60 m/min). Higher velocities can disrupt spray application operations due to turbulent airflow in the vicinity of the spray apparatus. This turbulence can also cause a properly designed exhaust system to fail to confine and remove vapors or to fail to confine and control residues, dusts, and deposits.

In some heating arrangements, forced make-up or replacement air directly compensating for the contaminated air exhausted from spray application operations is used in place of, or to augment, general area heating and ventilation.

With the many variables that can be encountered in heating and ventilating systems, it is generally advisable to engage the services of a qualified ventilating engineer to obtain a safe and efficient installation.

The features that should be considered include the following:

(1) Location of sources of heat to comply with Chapter 6 of NFPA 33
(2) Location of air intakes to prevent recalculation of contaminated air, and equipping air intakes with appropriate screens or filters
(3) Automatic temperature and proportioning controls, including an independent excess temperature limit control
(4) A safety system interlocked with the heater to automatically provide for its safe ignition and to minimize the hazards that might result from failure of its proper operating cycle, proper pressure of fuel supply, ventilation, and electrical power
(5) An interlock between the spray booth exhaust system and the make-up air system to ensure that both systems are operable and provide a proper balance of supply and replacement air
(6) In the case of direct-fired units, operating controls that will ensure that concentrations of unburned fuel or products of combustion are kept to levels that will be safe for operating personnel if inhaled [**33:** A.7.3]

A.43.1.5.5.1 If air exhausted from the spray area is permitted to be recirculated, as provided for in the exception, it is critical for effective monitoring that sensors be protected from obstruction and contamination. See *NFPA 72* for recommended maintenance and calibration procedures. [**33:** A.7.5.1]

A.43.1.5.5.2 If recirculated air is used for make-up air for occupied spaces, including spray areas, spray booths, spray rooms, and other process areas, the requirements for decontamination and maximum allowable concentrations of solvents will be far more stringent than those required by this *Code* for fire and explosion prevention. Refer to appropriate occupational safety and health and industrial hygiene standards for permissible exposure limits. One such standard is ANSI Z9.7, *Recirculation of Air from Industrial Process Exhaust Systems.* [**33:** A.7.5.2]

A.43.1.5.6 Exhaust systems should be individually ducted to the outside of the building. Where treatment of the exhaust airstream is necessary to satisfy environmental regulations or where energy conservation measures are used, this might not be practical and manifolding of the exhaust ducts might be necessary. It should be understood that manifolding of exhaust ducts increases the fire hazard. A fire starting in one booth can spread through the exhaust system and involve other spray areas. Heat exchangers, which are sometimes used to preheat the exhaust air before it enters an incinerator, are subject to fires from the spontaneous ignition of residue that collects on heat exchanger surfaces. [**33:** A.7.6]

A.43.1.5.8 The designer of the exhaust ducts and fasteners should refer to appropriate design guides, such as the SMACNA *Round Industrial Duct Construction Standards*, and the SMACNA *Rectangular Industrial Duct Construction Standards*, published by the Sheet Metal and Air Conditioning Contractors National Association, Inc. [**33:** A.7.8]

A.43.1.5.11 *Additional Ventilation.* If there are other operations that give off ignitable vapors in the vicinity of a spray application operation, these should be provided with independent mechanical ventilation. [**33:** A.7.11]

A.43.1.6.1 For large spray operations, coatings, thinners, and solvents can be stored in one of the following locations:

(1) Underground storage tanks
(2) Aboveground storage tanks

(3) Separate buildings
(4) Separate dedicated rooms within the facility

In some cases, liquids are pumped to a mixing room or paint kitchen, where they are mixed and then pumped to the spray area. For smaller operations, separate storage and mixing areas might not be justified. However, it is desirable to minimize the fire loading in or near the spray area by one or a combination of the following methods:

(1) Flammable liquid storage cabinets
(2) A protected enclosed metal structure
(3) Use of metal containers with limitations on the quantity of liquid located near the spray area [**33:** A.8.1]

A.43.1.6.4.1 NFPA 77 provides information on bonding and grounding. [**33:** A.8.4.1]

A.43.1.6.4.2 Valves should be kept shut when spray application operations are not being conducted to minimize the release of coating material in the event of fire. [**33:** A.8.4.2]

A.43.1.6.4.3 If plastic tubing leaks within shielded areas, such as within color changers, the resulting spray fire will destroy all tubing, releasing large quantities of coating material in an area that cannot be reached by the booth protection system. Automatic protection systems should be provided for these areas.

A major cause of fire in automatic electrostatic spray booths has been the replacement of original equipment plastic tubing with other types of tubing. This tubing, particularly if conductive coatings are used, is susceptible to the development of pinhole leaks. [**33:** A.8.4.3]

A.43.1.6.4.5 The severity and extent of the many fires in spray application operations has been substantially increased when rubber or plastic supply hose were burned off, resulting in the entire contents of the supply system being added to the fire. By limiting the amount of fuel available, the magnitude of the fire can be held to more manageable limits. The shutoff should be accomplished by means of an interlock with a fire detection system or the automatic fire extinguishing system for the spray area. This shutoff is normally accomplished by shutting the distribution pumps. In some cases, it is also advisable to limit the flow from the solvent piping system. This can be accomplished with properly specified check valves in the pipe "drops." [**33:** A.8.4.5]

A.43.1.6.5.2 NFPA 77 provides information on static protection. [**33:** A.8.5.2]

A.43.1.7.1 As indicated in Chapter 8 of NFPA 33, it is inadvisable to keep large quantities of flammable or combustible liquids in areas that expose personnel or important property to injury or loss. The primary reason for this requirement is that fires in flammable liquids are difficult to extinguish by the usual methods and, if large quantities are involved, they can spread the fire by flowing over large areas. For fires in small amounts of flammable or combustible liquids, hand extinguishers or large extinguishers on wheels especially designed for such fires are effective. If large quantities of liquids are to be protected, suitable automatic equipment should be provided and special attention should be given to proper dikes, curbs, and drains to prevent the flow to other property.

For the extinguishment of fire in spray residues, handheld fire extinguishers suitable for fire in ordinary combustibles or hose streams are effective.

Regardless of the level of filtration, residues will accumulate in the exhaust ductwork. Because the ductwork is part of the spray area, it must be protected in accordance with Chapter 7 of NFPA 33. This includes the ductwork from a water-wash booth.

Because the particulate filters will accumulate paint residue, they must be protected. The solvent concentrator units, by their design, contain high concentrations of solvent, so they also must be protected. Also, the most commonly used solvent concentrators use activated carbon as the adsorption media. This media is highly combustible, especially with high levels of solvents absorbed. Ketone solvents pose an even greater risk.

Due to the concern that suppression media other than water might damage the carbon bed, water-based suppression systems (wet pipe sprinklers, preaction sprinklers, dry pipe sprinklers, and open-head deluge systems) are recommended for this application.

The recirculated air supply unit must be protected due to the filter media it contains. Also, many large air supply units have gas-fired heaters to heat outside make-up air.

Air supply ducts from the particulate filter to the air supply unit and from the air supply unit to the spray booth are not normally protected, since all particulates have been filtered. [**33:** A.9.1]

A.43.1.7.4 Spray application operations should only be located in buildings that are completely protected by an approved system of automatic sprinklers. If located in unsprinklered buildings, sprinklers should be installed to protect spray application processes where practical. Because of the rapidity and intensity of fires that involve spray operations, the available water should be ample to simultaneously supply all sprinkler heads likely to open in one fire without depleting the available water for use by hose streams. Noncombustible draft curtains can be used to limit the number of sprinklers that will open.

Even when areas adjacent to coating operations are considered under reasonably positive fire control by adequate automatic sprinkler protection, damage is possible if operations are conducted on floors above those containing contents that are highly susceptible to water damage. Waterproofing and drainage of spray room floors can assist in reducing water damage on floors below. The proper drainage of the large volume of water frequently necessary to extinguish spray finishing room fires often presents considerable difficulty.

Automatic sprinklers in spray areas, including the interior of spray booths and exhaust ducts, should be wet pipe, preaction, or deluge system in order that water can be placed on the fire in the shortest possible time. Automatic sprinklers in spray booths and exhaust ducts should be of the lowest practical temperature rating. The delay in application of water with ordinary dry pipe sprinklers can permit a fire to spread so rapidly that final extinguishment is difficult without large resulting damage.

The location of the sprinkler heads inside spray booths should be selected with care in order to avoid heads being placed in the direct path of spray and yet afford protection for the entire booth interior. When in the direct path of spray even one day's operation can result in deposits on the sprinkler head that insulate the fusible link or choke open head orifices to the extent that sprinklers cannot operate efficiently.

Automatic sprinklers should also be located so that areas subject to substantial accumulations of overspray residue are protected. Generally, sprinklers are located no more than 4 ft (1220 mm) from side walls of booths and rooms and from dry

overspray collectors (where applicable). Sprinklers in booths or rooms should be on extra hazard occupancy spacing of 90 ft^2 (8.4 m^2).

Sprinklers or sprinkler systems protecting stacks or ducts should be automatic and of a type not subject to freezing. Dry pendant sprinklers are often used inside buildings near exhaust duct penetrations to the outside. Nonfreeze- or dry-type sprinkler systems are often used for ducts outside buildings. Sprinklers should be spaced no more than 12 ft (3660 mm) apart in the duct for adequate protection.

All sprinkler systems in spray areas should be controlled by an accessible control valve, preferably an OS&Y valve.

Use of water as the extinguishing agent for solvent and coating material fires might, in some cases, cause problems with splashing and "floating" of flaming liquids and residues. This possibility should be included with the other factors that are normally considered when choosing an extinguishing agent. In addition, water from sprinkler or deluge systems, after coming into contact with coating materials, residues, or solvents, might have to be collected and treated as hazardous waste. [**33:** A.9.4]

A.43.1.7.5 This discharge is typically accomplished by means of a piping network from the fire protection system into all parts of the spray area. To avoid potential flashback of an unextinguished fire, modular fire protection units should not be used to protect areas with ducts, plenums, or areas that exceed the listing of the system. They might, however, be suited for smaller open spray areas that do fall within the limits of the listing. [**33:** A.9.5]

A.43.1.7.7 During the first few seconds in the development of a fire in a dry powder spray booth, the following observations can be made:

(1) *Conventional structure equipment (spray booth connected to enclosed collector by ductwork).*

(a) Airborne powder in the spray plumes of the gun(s) burns vigorously as long as the gun feeder(s) continues to supply powder. Flames from about 2 ft to 6 ft (600 mm to 1800 mm) in length might extend from the guns but do not intrude into the interior of the guns. These flames do not extend into the exhaust ductwork if adequate airflow has been provided to maintain maximum powder concentration in the exhaust stream below the minimum explosive concentration (MEC). The flames are extinguished almost instantly if their supply of airborne fuel is interrupted by shutting down the gun feeders.

(b) Deposits of powder that have accumulated on the interior surfaces of the spray enclosure are not readily ignited, even by direct exposure to flames for a few seconds.

(c) If a fire in a powder spray booth has been sustained for an appreciable period of time (10- to 60-second delays have been observed), propagation proceeds as follows:

i. Heat exposure effects of the fire, acting upon the deposits of overspray powder that have accumulated on the interior surfaces of the spray enclosure, will modify a layer on the surface of the deposits to form an extremely fragile, tissue-thin structure of powder grains that have been softened only enough to adhere to adjacent grains but not enough to flow together and form a film. This is called a *sintered structure.* In response to the effects of vibration and rapidly fluctuating temperature (flickering of flames, etc.), this structure will break into a "mud-cracked" pattern and individual platelets in some regions will curl up, presenting their edges to the fire-involved atmosphere. Exposure to this environment's heat and turbulence will char and dislodge platelets to form airborne glowing embers comparable to those formed by burning piles of autumn leaves. These embers, if drawn through exhaust ductwork to the powder collector, could ignite the collector, resulting in an explosion.

ii. If this sequence is interrupted within the first few seconds of a fire's history, then ember formation and propagation by this mechanism can be stopped. The requirements of 43.1.7.7 are directed toward this result.

(2) *Integrated spray booth/"open" collector.*

(a) Fire in the spray plumes of the guns is identical to that found in (1). Since there is no exhaust ductwork and no enclosed collector, however, the conditions necessary for generation of an explosion do not exist and the risk is confined only to conventional fire considerations. If powder feed to the spray guns is sustained after ignition and if the exhaust fan is kept in operation, enough heat can be delivered to the region of the cartridge filters to result in ignition of the filters and collected residues, which will then be sustained as a "deep-seated" fire producing large quantities of smoke but limited heat.

(b) Attempts to extinguish "deep-seated" fires with carbon dioxide and dry chemical extinguishers have yielded disappointing results. Although flame is promptly knocked down, continued production of smoke and ultimate reflash should be expected. The most satisfactory results have been yielded by thoroughly soaking the filter cartridges and residues with water. [**33:** A.9.7]

A.43.1.7.8 Unlike powder application systems, the make-up air and exhaust systems for a liquid application system has to continue to function, unless there is a compelling reason to shut them down. [**33:** A.9.8]

A.43.1.8.1 The materials used in spray application processes can create serious fire hazards. For example, the vapors and mists created by the atomization of flammable and combustible liquids can form explosive mixtures in air. In addition, deposits of residues can ignite spontaneously or be easily ignited. Finally, fires involving flammable and combustible liquids or combustible residues can spread rapidly and can produce intense heat and smoke. Properly designed equipment can do much to lessen these hazards, but cannot eliminate them. These inherent characteristics should make it obvious that supervision of operations, maintenance of equipment, and daily cleaning are essential to a safe operation.

It is important that some type of periodic inspection be conducted and recorded as part of the maintenance procedures. It is also important that any inspections of spray application equipment be conducted by competent and reliable personnel who have knowledge of the equipment and the inherent characteristics of the materials used.

The frequency of the inspections depends on the individual components of the spray application process. For example, it

might be acceptable to check sprinkler control valves or other control mechanisms for approved fire protection systems on a weekly, or even a monthly, basis. However, this frequency would not be acceptable for ensuring adequate airflow through collector filters of a spray booth. As a minimum, this should be done at the beginning of each operating shift. Similarly, the build-up of residues would be an item that also would need to be checked on a per-shift basis. Individual plant operations might dictate that either of these items (airflow and residue build-up) be checked every few hours. [**33:** A.10.1]

A.43.1.8.1.1 The use of the term *predetermined* is intended to convey the idea that one cannot arbitrarily locate or conduct spray application operations without thought to the hazards and special requirements that such operations demand. Requirements regarding electrical equipment and ventilation are of primary concern. This *Code* also specifies requirements that can vary based on the type of equipment used, the type of material being spray applied, and even the type of operation. Any spray application operation should also consider the storage, handling, and distribution of the coating materials used in the process. Certainly there are other factors, but these examples should adequately explain the need for predetermining the spray area and why operations should be confined to those areas. [**33:** A.10.1.1]

A.43.1.8.2 When spray finishing any workpiece, there is frequently a portion of the spray that does not deposit directly on the object or material being coated, but deposits on adjacent surfaces as residue material. This is referred to as *overspray.* Many of these residues are highly combustible, igniting at very low temperatures or spontaneously, resulting in fast-spreading fires. To limit the duration and intensity of fires, the accumulation of deposits has to be minimized and controlled as much as practical. The accumulation of residues represents one of the most significant challenges to fire control.

Cleaning. The interior of spray booths, exhaust fan blades, and exhaust ducts should be regularly cleaned to avoid the accumulation of residues. Either spray operators should be allowed ample time for this cleaning, or a special maintenance crew should be provided for cleaning at the close of each day's operation. If equipment is so designed that during cleanup, hose streams or fixed water nozzles can be used in ducts and spray booths without water damage to building and contents, cleaning operations are greatly facilitated. Many plants have found that by coating the interior of spray booths with a suitable soap-like or water-soluble material immediately after cleaning, adhesive spray deposits can be removed on the following day with the use of water streams. Other materials, such as plastics that can be readily peeled off the interior of the spray booth, can also be used to facilitate cleaning of the overspray residue.

Properly maintained water-wash booths offer lower fire loading than dry booths. In order to maintain this advantage, it is necessary to perform regular and scheduled maintenance. This maintenance schedule should be recorded and the records filed. When the nozzles, jets or orifices, eliminator packs, and strainer screens become fouled with accumulated sludge or overspray, combustible residues will be deposited on the interior of the exhaust duct and fan blades. The nozzles, jets, orifices, and eliminator packs should be inspected each work shift. Strainer screens should be removed and cleaned each work shift.

The booth interior, exhaust stack, and fan blades should be checked periodically and accumulations of overspray and dirt should be removed as required. Exhaust ducts or stacks should not be entered for cleaning or repairs unless they are free from flammable vapors and have been thoroughly wet down. [**33:** A.10.2]

A.43.1.8.5 Many fires have originated from the spontaneous ignition of fabric and waste impregnated with coating materials. When sprayed articles are rubbed with rags or waste, all unclean rags and waste should be immediately placed in approved waste cans and removed from the premises at least daily at the close of each shift. When employees change clothes on plant premises, soiled clothing should be kept in metal lockers provided in a segregated dressing room. [**33:** A.10.5]

A.43.1.8.5.3 See NFPA 77 for information on bonding and grounding. [**33:** A.10.5.3]

A.43.1.8.7.4 See NFPA 77 for information on bonding and grounding. [**33:** A.10.7.4]

A.43.1.8.8.5 See NFPA 77 for information on bonding and grounding. [**33:** A.10.8.5]

A.43.1.8.9 Bleaching compounds, such as hydrogen peroxide, hypochlorites, perchlorates, or other oxidizing compounds, can cause fires when in contact with organic finishing materials. Hence, if bleaching compounds are to be used in spray booths, these booths should be thoroughly cleaned and used only for this purpose. The alternate use of spray booths for bleaching compounds and other finishing materials, or the alternate use of lacquers containing nitrocellulose and other types of finishing materials containing drying oils, such as varnishes, oil-based stains, air-drying enamels, primers, and so forth, without first thoroughly removing all traces of deposits can result in a spontaneous ignition fire. [**33:** A.10.9]

A.43.1.8.10 Stricter environmental regulation has given rise to the increased use of chlorinated solvents such as 1,1,1-trichloroethane and methylene chloride. These solvents are not photochemically reactive and, therefore, can be useful in helping to meet standards regarding volatile organic compound emissions. However, these solvents have a well-documented characteristic of being chemically reactive with aluminum. The reaction that occurs is unpredictable both in terms of when it will occur and to what degree it will proceed. In most situations there is no apparent reaction. Other situations have noted effects ranging from simple corrosion to catastrophic explosion-like failure accompanied by considerable shrapnel and a fireball. Understanding and controlling the subsequent hazard is hindered by this unpredictability. Although there is some understanding of the actual reaction, the following factors acting as independent variables have been found to have an effect on the initiation and rate of reaction:

(1) Heat
(2) Pressure
(3) Ratio of aluminum surface area to volume of solvent, presence of moisture (condensation), aluminum alloy content, metal content of the coating, and the introduction of other solvents or materials

Therefore, the only assuredly safe condition is to keep these materials separate.

It is important to realize that aluminum has been used as a primary material for spray equipment construction over many years. Incorporating these solvents into existing spray systems cannot be done safely without first determining the construction material of the equipment, and then replacing those

components where contact with aluminum and chlorinated solvent will occur within a pressurizable device (e.g., pumps, heaters, piping, fluid valves, spray gun cups). [**33:** A.10.10]

A.43.1.8.12 *Repairing.* If repairs or changes are to be made to equipment, care should be taken to see that all residue deposits are removed and the area wet down with water beforehand in order to avoid a fire. During such repairs, no spraying should be conducted, all flammable and combustible liquids and portable combustible material should be removed from the vicinity, and suitable fire extinguishers should be kept readily available.

The use of welding or cutting torches should be prohibited except under the supervision of a competent person familiar with the fire hazards involved. See NFPA 51B. [**33:** A.10.12]

A.43.7.1 Organic peroxides are a group of chemicals that are used as catalysts (chain reaction initiators) in the polymerization of plastics monomers and resins. Commercially, they are available as numerous formulations that differ not only in chemical species, but also in concentration, type, and amount of diluent.

The rapidly expanding reinforced styrene-polyester composites industry is one of the larger users of organic peroxide formulations. The formulations are used to catalyze (harden) the styrene-polyester resin. Frequently, the resin mixture and the catalyst are spray-applied to the reinforcing matrix using an automatic proportioning spray applicator. The most widely used catalyst systems are formulations of methyl ethyl ketone peroxide (MEKP), in varying concentration with different diluents, usually dibutyl phthalate. For transportation purposes, the U.S. Department of Transportation classifies these formulations as "organic peroxides" or "flammable liquids."

For purposes of storage and warehousing, NFPA 432 classifies these materials using a five-tiered system, depending on their relative hazard as packaged for shipment. Thus, NFPA 432 recognizes that the different formulations available differ widely in fire hazard. In many cases, the "active oxygen," a measure of the material's catalytic activity and one measure of its reactivity hazard, has been reduced, thus reducing any explosion hazard.

The following precautions are recommended:

(1) Organic peroxide formulations should be stored in a cool, dry location that is separated from the work area. The formulations should not be stored with materials with which it might not be compatible. Storage quantity limitations and fire protection requirements are contained in NFPA 432.
(2) The amount of organic peroxide formulation kept in the work area should be limited to that needed for a single day's use. Any formulation remaining at the end of a workday should be returned to the storage area.
(3) All necessary precautions, as recommended by the supplier, should be taken when using organic peroxide formulations. Good housekeeping should be strictly observed and any spills should be immediately cleaned. Spilled material or material (such as resin) that has been contaminated with organic peroxide formulations has to be properly disposed of immediately. Trained personnel and safe operating procedures are essential for safe operation. The user should refer to the Material Safety Data Sheet (MSDS), or its equivalent, for safety and handling information for the specific formulation being used. [**33:** A.16.1]

A.43.7.3.2 Such mixing can result in a spontaneous fire or explosion. [**33:** A.16.3.2]

A.43.7.6 The chemical and thermal stability of organic peroxide formulations is markedly reduced by contact or contamination with strong acids or bases, sulfur compounds, amines, and reducing agents of any type. Decomposition gases or vapors produced by some organic peroxide formulations can present a fire or explosion hazard. For example, the decomposition of benzoyl peroxide produces highly flammable vapors.

Heat, including heat from fire exposure, is an important factor in the decomposition of organic peroxide formulations. Some formulations will decompose quietly when exposed to a slow, gradual increase in temperature. However, these same formulations might decompose violently, or even explode, when subjected to a rapid, excessive increase in temperature, such as from fire exposure.

In general, an organic peroxide that is formulated with a diluent into a dilute solution or paste will generally burn more slowly than the concentrated or pure material and is less sensitive to shock or impact. [**33:** A.16.6]

A.43.8.1 The reinforced styrene-polyester composites industry uses a variety of fabrication techniques to manufacture a wide range of useful products. Most of these products are fabricated with polyester- or vinyl ester-based resins and a fiber reinforcement, most commonly glass fiber. The resins contain a monomer, usually styrene, and are mixed with a catalyst to initiate curing. Other volatile organic chemicals used include the organic peroxide formulations, such as methyl ethyl ketone peroxide (MEKP), used to cure the resin, and various dyes and admixtures.

Open molding is the predominant molding method, with mold sizes ranging from less than 1 ft^2 (0.1 m^2) to very large structures, such as boat hulls over 100 ft (30 m) in length. The two most widely used application methods are hand lay-up and spray-up. In the hand lay-up fabrication method, a glass fiber mat is saturated with the resin by direct spray application or by manual application of the liquid resin. The spray-up fabrication method employs a "chopper gun" that simultaneously applies catalyzed resin and chopped glass fiber to a mold. In addition, many operations use a spray-applied polyester resin gelcoat, as for in-mold coating. Products produced by this industry include boats, bathtubs and shower enclosures, sinks and lavatories, underground storage tanks, auto and truck bodies, recreational vehicles, pollution control equipment, piping, and other specialized parts. [**33:** A.17.1]

A.43.8.3 The determination by the Technical Committee on Finishing Processes that Ordinary Hazard (Group 2) sprinkler design density is sufficient for protecting spray application of styrene cross-linked thermoset resins (commonly known as glass fiber reinforced plastics) is based on several factors:

(1) Although the styrene monomer that is a component in unsaturated polyester resin is a Class I flammable liquid by definition, actual burn tests reveal that the resin does not readily ignite and burns slowly when it does ignite.
(2) Tests of resin application areas have shown that the processes do not produce vapors that exceed 25 percent of the lower flammable limit (LFL). Resin application tests have also indicated that the maximum levels of vapor concentrations are about 690 parts per million (ppm) for spray application. The tests were conducted in an enclosed area with no ventilation. This concentration is much less than 25 percent of the LFL, which is 11,000 ppm for styrene. [**33:** A.17.3]

A.43.8.5.3 NFPA 77 contains information on static electricity. [**33:** A.17.5.3]

A.43.9.1 Such processes include, but are not limited to, dipping, roll coating, flow coating, curtain coating, and cleaning.

A.43.9.1.3 See NFPA 86, *Standard for Ovens and Furnaces.*

A.43.9.2 Section 43.9 anticipates conditions of average use.

A.43.10.1 The safety of a spray application process depends on the employees who operate it and the knowledge and understanding they have of the process and equipment involved. Therefore, it is important to maintain an effective and ongoing training program for all employees involved in such work. New employees should be effectively trained before being assigned to a job. After the initial training, employees should receive periodic retraining to ensure their knowledge and understanding of normal process procedures as well as with emergency procedures or changes in procedures. Safe work habits are developed; they do not occur naturally.

All training should be provided by qualified personnel knowledgeable in the processes and operations involved. Appropriate training should be provided for all employees involved in or affected by spray application processes. This includes, but is not limited to, operating, supervisory, housekeeping, and maintenance personnel. [**33:** A.18.1]

A.43.10.1.2 Any work requiring entry of employees into confined spaces should be conducted in accordance with a written procedure that is rigidly followed. This procedure should include, but not be limited, to the following:

(1) Analysis of confined space atmosphere for flammable, combustible, toxic, or oxygen-deficient conditions
(2) Rescue, fire, and emergency procedures
(3) Locking and tagging procedures for all power and process hazard sources
(4) Ventilation
(5) Personal protective equipment
(6) Proper tools and electrical equipment
(7) Written entry authorization by a qualified responsible individual [**33:** A.18.1.2]

A.45.1.2 The use of automatic sprinkler protection in accordance with NFPA 13 is recommended for all storage of combustible fibers.

A.50.1.1 These requirements include, but are not limited to, all manner of cooking equipment, exhaust hoods, grease removal devices, exhaust ductwork, exhaust fans, dampers, fire-extinguishing equipment, and all other auxiliary or ancillary components or systems that are involved in the capture, containment, and control of grease-laden cooking effluent. [**96:** A.1.1.1]

A.50.1.4 This judgment should take into account the type of cooking being performed, items being cooked, and the frequency of cooking operations. Examples of operations that might not require compliance with NFPA 96 include the following:

(1) Day care centers warming bottles and lunches
(2) Therapy cooking facilities in health care
(3) Churches and meeting operations that are not cooking meals that produce grease-laden vapors
(4) Employee break rooms where food is warmed [**96:** A.1.1.4]

A.50.2.1.1.1 See UL 710B. [**96:** A.4.1.1.1]

A.50.2.1.6 When solid fuel is burned in cooking operations, increased quantities of carbon, creosote, and grease-laden vapors are produced that rapidly contaminate surfaces, produce airborne sparks and embers, and are subject to significant flare-ups. Also, solid fuel cooking requires fuel storage and handling and produces ash that requires disposal. For these reasons, solid fuel cooking operations should comply with Chapter 14 of NFPA 96. [**96:** A.4.1.6]

A.50.2.1.9 The AHJ might exempt temporary facilities, such as a tent, upon evaluation for compliance to the applicable portions of NFPA 96 or this *Code.*

Although it might not be practical to enforce all requirements of NFPA 96 in temporary facilities, the AHJ should determine that all necessary provisions that affect the personal safety of the occupants are considered. [**96:** A.4.1.9]

A.50.2.2 See Figure A.50.2.2(a) through Figure A.50.2.2(g) for clarification of the appropriate clearances required in 50.2.2. [**96:** A.4.2]

A.50.4.3.2 Examples of cooking equipment that produce grease-laden vapors include, but are not limited to, appliances such as deep-fat fryers, ranges, griddles, broilers, woks, tilting skillets, and braising pans. [**96:** A.10.1.2]

A.50.4.4.3 UL 300 primarily addresses self-contained chemical extinguishing systems. [**96:** A.10.2.3]

A.50.4.4.10(4) An approved weekly recorded inspection could consist of a log of entries that would display the date and time of the inspection and the initials of the persons conducting the visual inspection. Attaching the log to a clipboard and mounting it near the valve in question serves as a convenient reminder of the need to conduct the inspection. [**96:** A.10.2.10(4)]

A.50.4.11.2 Although training and qualification might be available elsewhere, the manufacturer of the equipment being installed should be considered an appropriate source of training and qualification. [**96:** A.10.9.2]

A.50.4.12.1 The system used to rate extinguishers for Class B fires (flammable liquids in depth) does not take into consideration the special nature of heated grease fires. Cooking grease fires are a special hazard requiring agents that saponify (make a soap foam layer to seal the top surface of the grease) for this application. [**96:** A.10.10.1]

A.50.5.2.1 It is recommended that such training and qualification be performed by the manufacturer of the equipment being inspected and serviced. The various electrical, mechanical, and filtration components of the systems should be inspected and tested as required to ensure that they continue to function according to original design. [**96:** A.11.2.1]

A.50.5.2.4 The date of manufacture marked on fusible metal alloy sensing elements does not limit when they can be used. These devices have unlimited shelf life. The intent of 50.5.2.4 is to require replacement of fusible metal alloy sensing elements that have been installed for up to 1 year in environments that subject them to contaminant-loading, such as grease in restaurant hoods and ducts that could adversely affect their proper operation. [**96:** A.11.2.4]

A.50.5.3 The primary focus of an inspection for cleanliness is to establish whether the volume of grease buildup within the exhaust system warrants cleaning and to determine whether adequate access is available throughout the exhaust system to remove the grease buildup. [**96:** A.11.3]

A.50.5.4.2 Hoods, grease removal devices, fans, ducts, and other appurtenances should be cleaned to remove combustible contaminants to a minimum of 0.002 in. (50 microns).

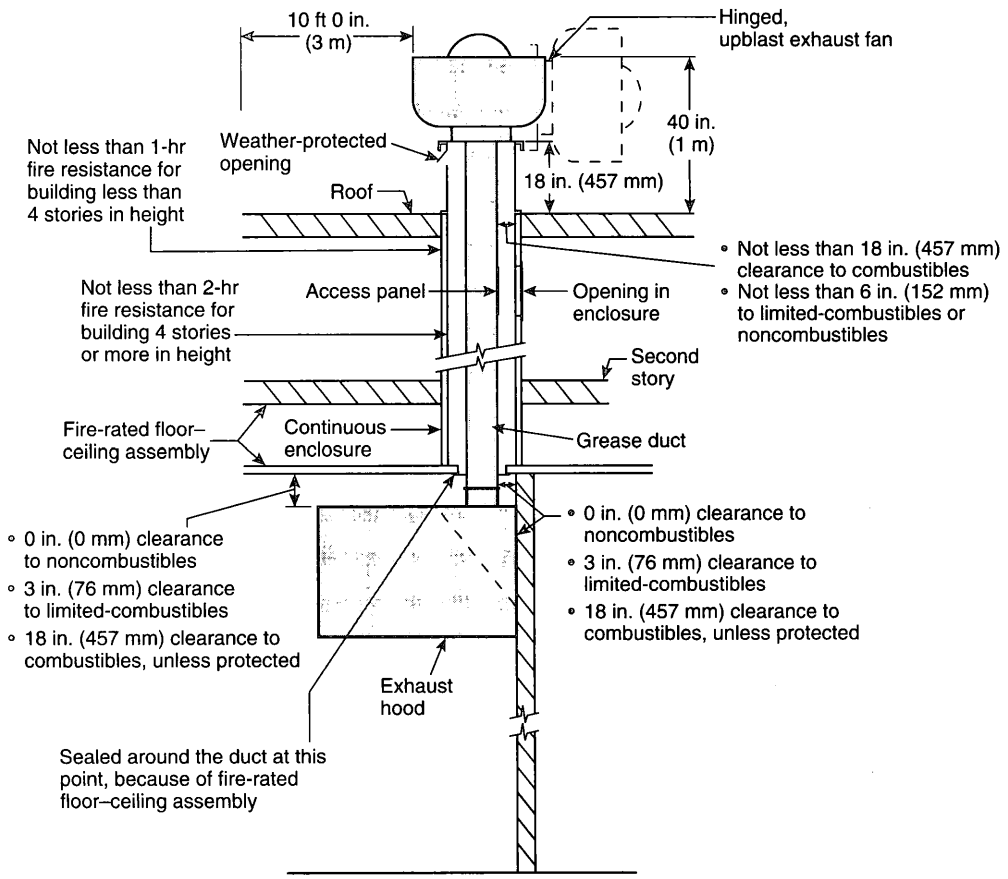

FIGURE A.50.2.2(a) Typical Section View for Building with Two Stories or More with Fire-Rated Floor–Ceiling Assembly. [96:Figure A.4.2(a)]

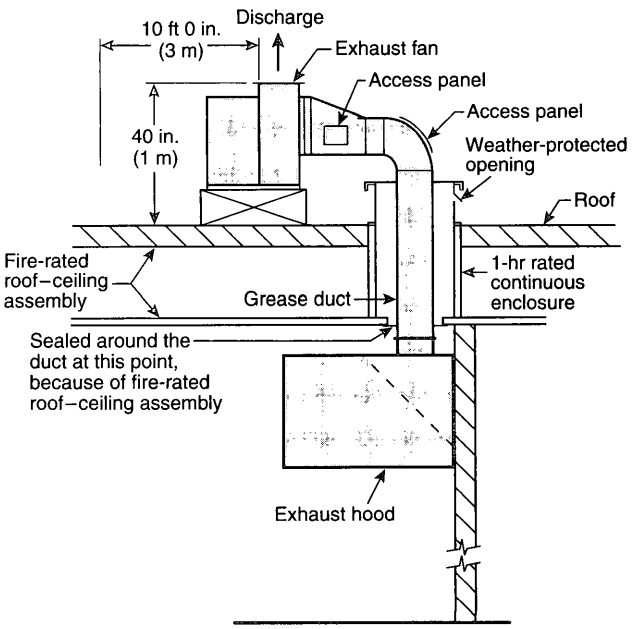

Note: Clearance notes in A.50.2.2(a) apply also to this drawing.

FIGURE A.50.2.2(b) Typical Section View for One-Story Building with Fire-Rated Roof–Ceiling Assembly. [96:Figure A.4.2(b)]

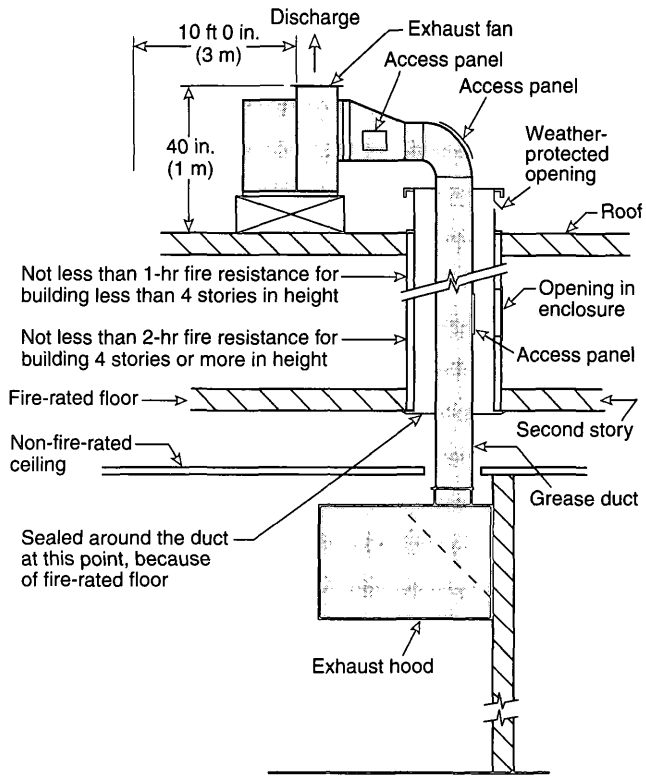

Note: Clearance notes in A.50.2.2(a) apply also to this drawing.

FIGURE A.50.2.2(c) Typical Section View for Building with Two Stories or More with Non-Fire-Rated Ceiling and Fire-Rated Floor. [96:Figure A.4.2(c)]

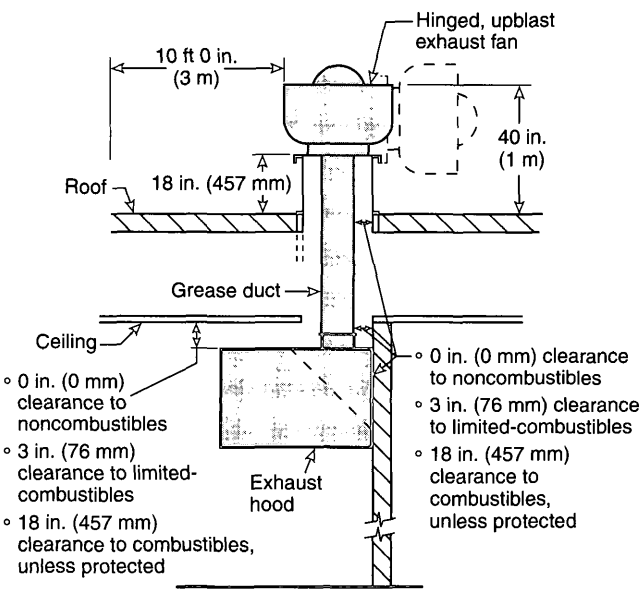

Note: Enclosure is not required in 1-story building where roof–ceiling assembly does not have a fire resistance rating.

FIGURE A.50.2.2(d) Typical Section View for One-Story Building Without Fire-Rated Roof–Ceiling Assembly. [96:Figure A.4.2(d)]

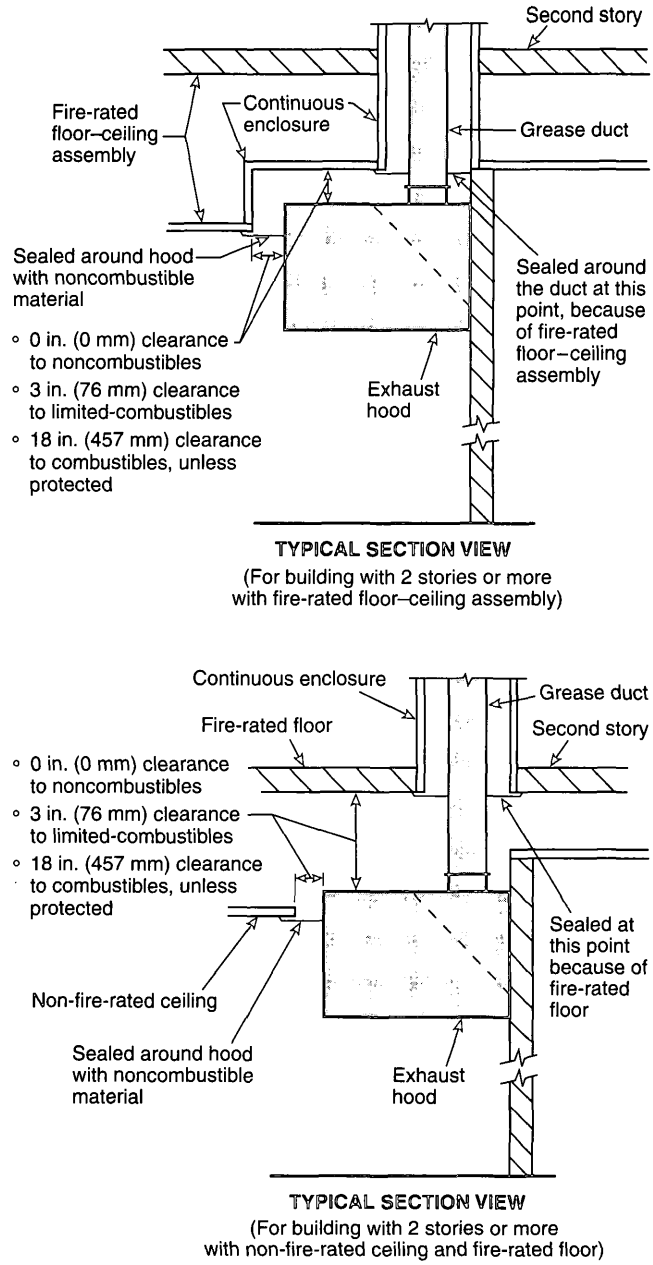

FIGURE A.50.2.2(e) Detail Drawings Showing Hoods Penetrating Ceilings. [96:Figure A.4.2(e)]

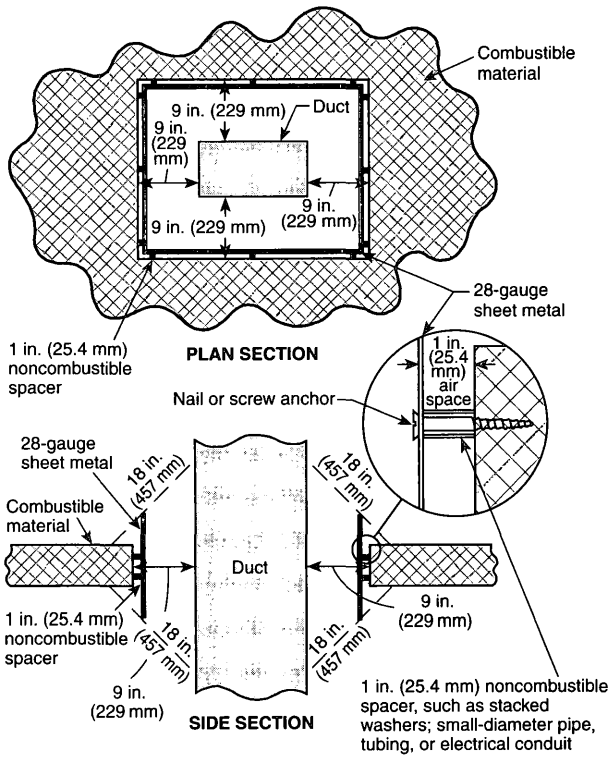

FIGURE A.50.2.2(f) Example of Clearance Reduction System: 9 in. (229 mm) Clearance to Combustible Material. [96:Figure A.4.2(f)]

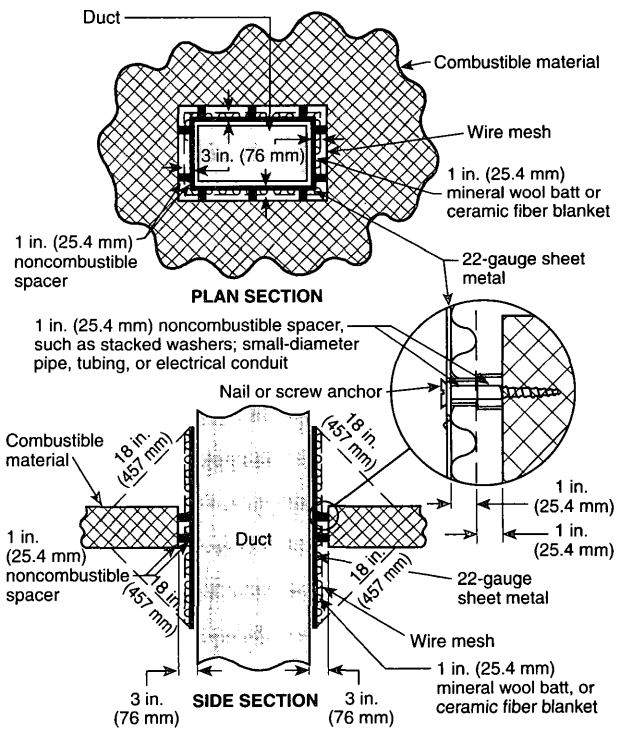

FIGURE A.50.2.2(g) Example of Clearance Reduction System: 3 in. (76 mm) Clearance to Combustible Material. [96:Figure A.4.2(g)]

See Figure A.50.5.4.2.

When to clean: Establish a measurement system of deposition to trigger a need to clean, in addition to a time reference based on equipment emissions.

The method of measurement is a depth gauge comb, shown in Figure A.50.5.4.2, which is scraped along the duct surface. For example, a measured depth of 0.078 in. (2000 microns) indicates the need to remove the deposition risk. The system would also include point measurement in critical areas. For example, 0.125 in. (3175 microns) in a fan housing requires cleaning. [**96:** A.11.4.2]

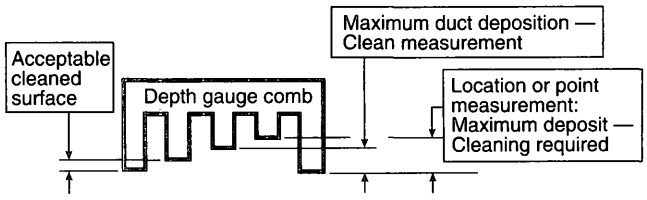

FIGURE A.50.5.4.2 Depth Gauge Comb. [96:Figure A.11.4.2]

A.50.6.1.2.2 The effectiveness of an automatic extinguishing system is affected by the placement of the nozzles. For this reason, it is essential that cooking appliances be situated in the area in which they were when the extinguishing equipment was designed and installed. If an appliance is moved from under the equipment for cleaning or any other reason, it should be replaced to its original position prior to initiating a cooking operation.

When appliances are on wheels or casters for ease of cleaning, it is important that the appliance be placed in its design position to ensure that the fire-extinguishing system will be effective. An approved method should ensure that the appliance is returned to its appropriate position before cooking takes place. Channels, markings, or other approved methods will assist in ensuring proper placement. [**96:** A.12.1.2.2]

A.52.3.4.2 Methods of achieving this protection can include, but are not limited to, the following:

(1) Liquidtight sloped or recessed floors in indoor locations or similar areas in outdoor locations
(2) Liquidtight floors in indoor locations or similar areas in outdoor locations provided with liquidtight raised or recessed sills or dikes
(3) Sumps and collection systems

A.53.1 See the mechanical code for refrigerant group descriptions.

A.53.16.2 Emergency discharge systems for ammonia and other refrigerants should comply with the requirements of ASHRAE 15, *Safety Code for Mechanical Refrigeration.* Where discharge to atmosphere endangers life or the environment, manually controlled discharge of refrigerant vapor to a water diffusion system should be considered.

A.60.1.1 This chapter introduces the concepts of control areas and maximum allowable quantities. The purpose is to permit limited amounts of hazardous contents in occupancies having minimum controls without triggering the more restrictive Protection Level 1 through Protection Level 5 building requirements. The allowable quantities in Table 60.1.3.1 are based on demonstrated need and historical safe storage and

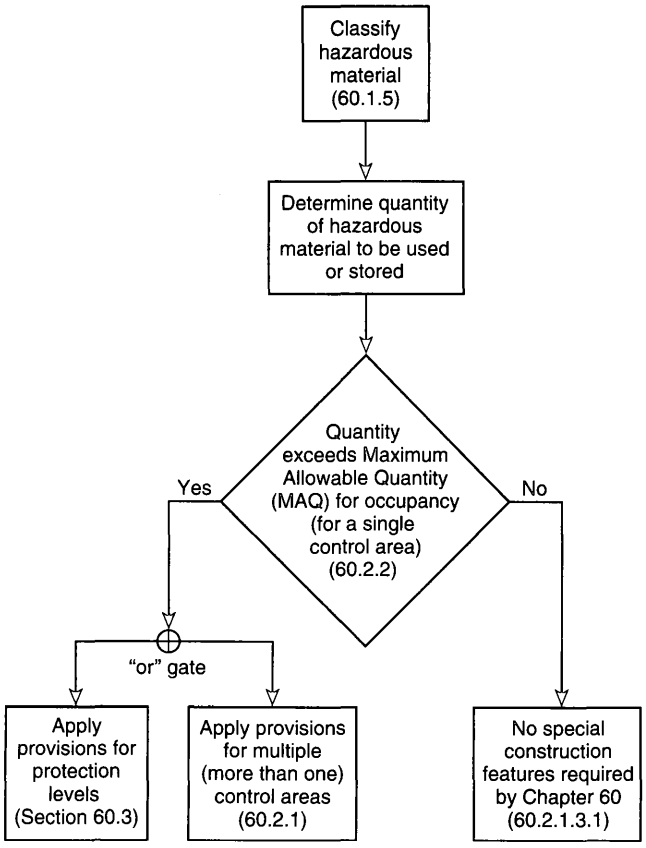

FIGURE A.60.1.1 Application of Chapter 60 Requirements for Hazardous Materials. [*5000*:Figure A.34.1.1]

use of hazardous contents. Section 60.3, however, establishes additional controls for occupancies exceeding the hazardous contents limits prescribed for control areas.

Not all of the hazardous materials categories are placed into the high hazard category, and some of these materials (contents) have been recognized as being of low or ordinary hazards, depending on their nature in a fire. Class IIIB combustible liquids, Class 1 unstable (reactive) materials, Class 1 water-reactive materials, Class 1 oxidizing solids and liquids, and Class IV and Class V organic peroxides are high hazard materials, which, in some cases, do not have a maximum allowable quantity (MAQ) and, therefore, are not required to comply with the requirements for Protection Level 1 through Protection Level 5. Some materials, though classified as high hazard, such as aerosols, are exempt from the requirements of Chapter 60, as they are regulated elsewhere in the *Code*. For additional exceptions, see 60.1.1. Figure A.60.1.1 helps to illustrate the conditions under which the protection level requirements are applicable. [*5000*: A.34.1.1]

A.60.1.2.3.1.1 Permit applications might require submittal of a hazardous materials management plan and a hazardous materials inventory statement in accordance with 60.1.2.5.1 and 60.1.2.5.2.

A.60.1.2.5.1.1 See Annex D for a model Hazardous Materials Management Plan (HMMP).

A.60.1.2.5.2 See Annex D for a model Hazardous Materials Inventory Statement (HMIS).

A.60.1.2.20 For seismic requirements and the seismic zone in which the material is located, see the building code.

A.60.3.2.6 Footnote to Table 60.3.2.6. The following items should be considered in the design:

(1) Deflagration vents designed to release from the exterior walls or roofs of the building should discharge directly to the exterior of the building where an unoccupied space of not less than 50 ft (15 m) in width is provided between the exterior walls of the building and the property line, unless the vents comply with A.60.3.2.6(2).
(2) Deflagration vents designed to remain attached to the building when venting a deflagration should be located so that the discharge opening is not less than 10 ft (3050 mm) vertically from window openings and exit discharge doors in the building and not less than 20 ft (6100 mm) horizontally from exit discharge doors in the building, window openings and exit discharge doors in adjacent buildings on the same property, and property lines.
(3) Deflagration vents should not discharge into the interior of the building.
(4) Additional guidance for deflagration venting can be found in NFPA 68, *Guide for Venting of Deflagrations.*

[*5000*: A.34.3.2.6]

A.60.4.1 For storage, see Section 60.4.

A.60.4.1.1 For requirements pertaining to the application of registered pesticide products, see regulations of the United States Environmental Protection Agency.

A.61.1.1.1 See A.1.3.2.

A.61.1.1.3 An example of an aerosol product that is not flammable and, therefore, not covered by NFPA 30B is whipped cream: the base product is a water-based material and the propellant is nitrous oxide, which is nonflammable. [30B: A.1.1.2]

A.61.1.1.4 See NFPA 58, *Liquefied Petroleum Gas Code.* [30B: A.1.1.3]

A.61.2 See Annex F of NFPA 30B entitled Chemical Heat of Combustion for Aerosols.

A.61.5.1.2 At the present time there have been no fire retardant packaging systems tested that have demonstrated substantial mitigation of the fire hazards presented by aerosol products. [30B: A.6.1.2]

A.61.5.2 Fire tests and fire experience show that Level 1 aerosol products present relatively the same fire hazards as Class III commodities, as these are defined and described in NFPA 13. In some cases, the AHJ or applicable fire or building codes might require storage of such materials to be protected from fire. If fire protection is by means of automatic sprinklers, then the requirements of NFPA 13 should be used as a design basis. [30B: A.6.2]

A.61.7.3.3 See NFPA 51B, *Standard for Fire Prevention During Welding, Cutting, and Other Hot Work.* [30B: A.8.3.3]

A.61.7.7 See NFPA 77, *Recommended Practice on Static Electricity,* for further information. [30B: A.8.7]

A.63.1.1.1 See A.1.3.2.

A.63.1.1.3(1) For regulations on the transportation of gases, see 49 CFR 100 to 179 (Transportation) and *Transportation of Dangerous Goods Regulations.* [55: A.1.1.2(1)]

A.63.1.1.3(4) It is intended that installations of bulk oxygen systems regulated by NFPA 99 also comply with the requirements of Chapter 9 of NFPA 55. The bulk oxygen system terminates at the point where oxygen at service pressure first enters the supply line. [55: A.1.1.2(4)]

A.63.1.1.3(8) For information, see NFPA 52, *Compressed Natural Gas (CNG) Vehicular Fuel Systems Code*, or NFPA 58, *Liquefied Petroleum Gas Code*. [**55:** A.1.1.2(8)]

A.63.1.1.3(9) The storage of gases outside of laboratory work areas is covered by NFPA 55. [**55:** A.1.1.2(9)]

A.63.2.8 Under the requirements of 29 CFR 1910.38 established by OSHA regulations, employers must establish an employee alarm system that complies with 29 CFR 1910.165. The requirements of 29 CFR 1910.165 for the employee alarm system include, but are not limited to, systems that are capable of being perceived above ambient noise or light levels by all employees in the affected portions of the workplace. Tactile devices can be used to alert those employees who would not otherwise be able to recognize the audible or visual alarm. The alarm system can be electrically powered or powered by pneumatic or other means. State, local, or other governmental regulations can also establish requirements for employee alarm systems. [**55:** A.6.8]

A.63.2.9 NFPA 68, *Guide for Venting of Deflagrations*, provides more information on this subject. [**55:** A.6.9]

A.63.2.10 The intent of this section is to require a water-based fire-extinguishing system to keep vessels containing compressed gases cool in the event of an exposure fire, thereby minimizing the likelihood of a release and associated consequences. Accordingly, alternative fire-extinguishing systems, such as dry-chemical or gaseous agent systems, should not be substituted. [**55:** A.6.10]

A.63.3.1.1 The equipment referenced is intended to include fuel cell applications, generation of hydrogen from portable or transportable hydrogen generation equipment, batteries, and similar devices and equipment that utilize hydrogen for the purpose of power generation. It does not include hydrogen production facilities intended to produce hydrogen used for distribution or repackaging operations operated by gas producers, distributors, and repackagers. [**55:** A.7.1.1]

A.63.3.1.6.2 Figure A.63.3.1.6.2 is a schematic showing the separation distances required by 63.3.1.6.2. [**55:** A.7.1.6.2]

A.63.3.1.10.3 The gas supplier should be consulted for advice under these circumstances. [**55:** A.7.1.10.3]

A.63.3.9.3.6 The areas for typical restricted flow orifices are shown in Table A.63.3.9.3.6.

The formula has been taken from industry publications including the Scott Specialty Gases *Design and Safety Handbook*. It is based on estimated flow rates for air at 70°F (21°C) discharging to normal atmospheric pressure through an average shape and quality orifice. It can be assumed to be ±15 percent accurate. Correction factors have been built into the formula as presented in 7.9.3.6.2 of NFPA 55 to accommodate the use of gases other than air (e.g., use of specific gravity data). [**55:** A.7.9.3.6]

Table A.63.3.9.3.6 Typical Orifice Areas

Orifice Diameter		Area	
in.	cm	in.^{2}	cm^2
0.006	0.015	2.83×10^{-5}	1.83×10^{-4}
0.010	0.025	7.85×10^{-5}	5.06×10^{-4}
0.014	0.036	1.54×10^{-4}	9.93×10^{-4}

[**55:**Table A.7.9.3.6]

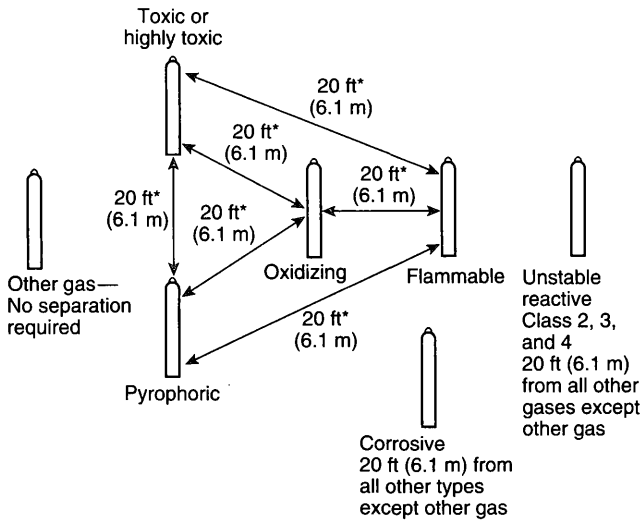

* The 20 ft (6.1 m) distance can be reduced without limit when separated by a barrier of noncombustible materials at least 5 ft (1.5 m) high that has a fire-resistant rating of at least ½ hour.

FIGURE A.63.3.1.6.2 Separation of Gas Cylinders by Hazard. [55:Figure A.7.1.6.2]

A.63.4.2 Pressure vessels of any type might be subject to additional regulations imposed by various states or other legal jurisdictions. Users should be aware that compliance with DOT or ASME requirements might not satisfy all of the required regulations of the location in which the vessel is to be installed or used. Liquid oxygen containers should be fabricated from materials meeting the impact test requirements of paragraph UG-84 of the ASME *Boiler and Pressure Vessel Code*, Section VIII. [**55:** A.8.2]

A.63.4.4.1.1.2 An example of this identification is 360 degree wrap-around tape. [**55:** A.8.4.1.1.2]

A.63.4.12.2.5.4.1 The intent of these provisions is to make certain that the cryogenic installation is not exposed to the potential of a pool fire from the release of flammable or combustible liquids. Cryogenic fluids are not diked in order that they are allowed to dissipate should leakage occur. Studies conducted by NASA (NSS 1740.16, *Safety Standard for Hydrogen and Hydrogen Systems*, 1997) shows that the use of dikes around liquid hydrogen storage facilities serves to prolong ground-level flammable cloud travel and that the dispersion mechanism is enhanced by vaporization-induced turbulence. The travel of spilled or leaked cryogenic fluid to distances greater than a few feet from the source given the nature of the typical leak is considered to be implausible due to the character of cryogenic fluids and their ability to quickly absorb heat from the surrounding environment. [**55:** A.8.12.2.5.4.1]

A.63.4.12.2.6.2 The placement of stationary containers is limited with respect to exposure hazards. Table 63.4.6.2 establishes the minimum separation distance between a building and any stationary tank at 1 ft (0.3 m). Additional limitations are placed on wall openings, air intakes, and other exposures. The material-specific tables for liquid hydrogen and liquid oxygen specify increased distances according to the type of construction adjacent to the tank. A problem arises when courtyards are configured so as to interrupt the free movement of air around a tank where an

asphyxiation hazard, a flammable hazard, or an oxygen-enriched environment can be created.

Placement of stationary containers proximate to the wall of the building served is allowable providing the minimum separation distances for exposure hazards are met. When additional walls encroach on the installation to form a court, the focus of concern shifts away from the exposure hazards associated with the building itself to the hazards associated with personnel due to hazardous atmospheres that can be created due to the lack of free air movement and ventilation.

By specifying the minimum distance between the tank and the encroaching walls that form the court, the circulation of adequate air is ensured. Placing the tank at not less than the height of two of the three encroaching walls results in creating an opening such that the angular dimension between the top of two of the three encroaching walls and the point over which the tank is placed is not greater than 45 degrees, thereby allowing the circulation of air through the space in which the tank is installed. [55: A.8.12.2.6.2]

A.63.4.12.2.6.2.1 See Figure A.63.4.12.2.6.2.1. [55: A.8.12.2.6.2.1]

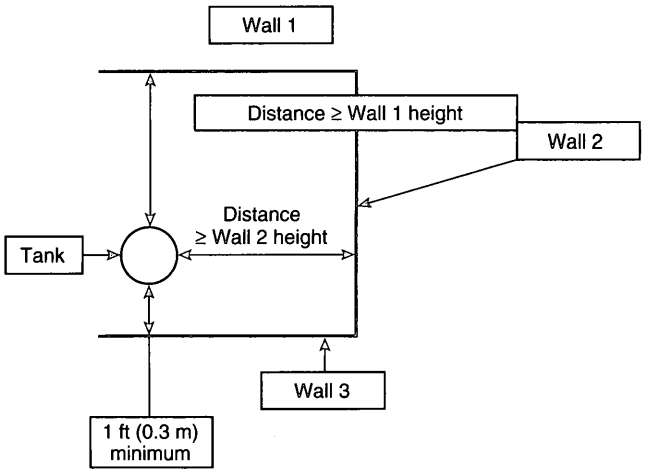

FIGURE A.63.4.12.2.6.2.1 Bulk Oxygen System Located in a Courtyard. [55:Figure A.8.12.2.6.2.1]

A.65.11.1 The content of Section 65.11 has been extensively reorganized in order to provide all the requirements for a specific facility or store type to appear in one section. To facilitate use of this section for those familiar with the 2003 *Code*, a guide to this reorganization has been provided in Annex H of NFPA 1124. [1124: A.7.1]

A.65.11.1.1 To assist the user of this *Code* in determining whether a CFRS facility or store is new or existing for the purpose of applying this *Code*, Table A.65.11.1.1 has been provided. [1124: A.7.1.1]

A.65.11.2.2 This requirement is not intended to preclude the retail sales of consumer fireworks in occupancies that might be classified as Group H High Hazard (Hazardous) by a building code. [1124: A.7.2.2]

A.65.11.3.2 Specific information and requirements for permits can be found in Section 1.12 for those jurisdictions that have not adopted a building code or fire code. [1124: A.7.3.2]

A.65.11.3.4 See A.6.6 of NFPA 1124. [1124: A.7.3.4]

Table A.65.11.1.1 Applicability of Section 65.11 to New and Existing CFRS Facilities and Stores

Venue Type	Application
Temporary stand – seasonal	New
Temporary tent – seasonal	New
Temporary facility – seasonal	New
Temporary stores (including bulk retail) – seasonal	New
Permanent stand*	
– Year round	Existing
– Seasonal	Existing
Permanent stand†	
– Year round	New
– Seasonal	New
Permanent tent*	
– Year round	Existing
– Seasonal	Existing
Permanent tent†	
– Year round	New
– Seasonal	New
Permanent CFRS facility*	
– Year round	Existing
– Seasonal	Existing
Permanent CFRS facility†	
– Year round	New
– Seasonal	New
Permanent store*	
– Year round	Existing
– Seasonal	Existing
Permanent store†	
– Year round	New
– Seasonal	New

Note: Change in display or exit layout can require new permit based on local requirements.

* Sales conducted within 1 year prior to the effective date.

† Sales not conducted within 1 year prior to the effective date.

CFRS facility – consumer fireworks retail sales facility

[1124:Table A.7.1.1]

A.65.11.3.13 Fire safety and evacuation plans should be prepared by the owner or operator of the consumer fireworks retail sales facility or store in consultation with the AHJ. [1124: A.7.3.13]

A.65.11.3.14.3.2 The purpose of 65.11.3.14.3.1.1 is to ensure that a readily available path of travel is provided to reach the required exits and that such travel can occur under emergency conditions without significant impedance by the aisle arrangement. In fact, cross-aisles are required to facilitate access to alternate aisles and paths of travel in case an aisle or a path of travel is blocked by an incident. An example of how the requirements of 65.11.3.14.3.2 would be implemented for the design of an exit access aisle system in a CFRS facility is shown in Figure A.65.11.3.14.3.2. [1124: A.7.3.14.3.2]

A.65.11.3.15 Consumer fireworks sealed in packaging meeting U.S. DOT standards for shipping would not be considered to be on display. [1124: A.7.3.15]

A.65.11.3.15.2 The ability to view the entire retail sales area is important for several reasons. For employees, such visibility allows easier supervision of the customers and helps to minimize the possibility of malicious mischief, such as the willful

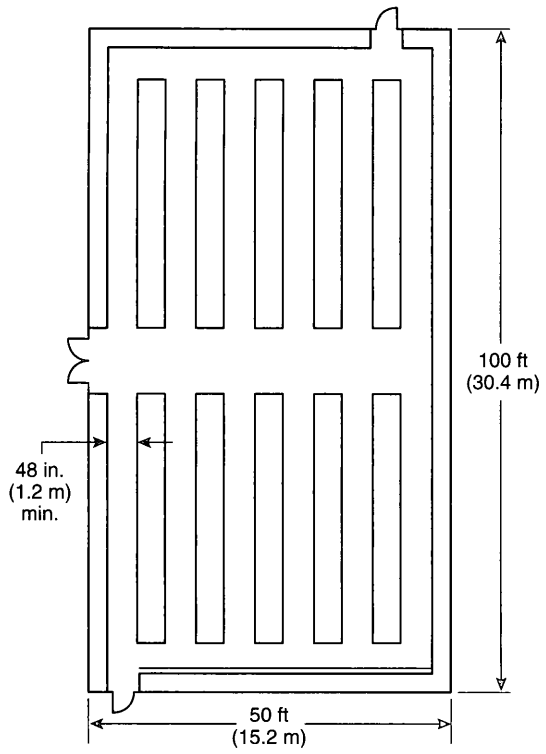

FIGURE A.65.11.3.14.3.2 Typical Design for Exit Access Aisle System in CFRS Facility. [1124: Figure A.7.3.14.3.2]

setting of fires in the fireworks merchandise displays. It also allows employees to quickly observe and respond to an incipient fire condition. Response might include the following:

(1) Evacuation of the occupants
(2) Notification of the local fire department
(3) Initiation of a fire attack using the fire extinguishers in the facility, provided that the fire is still small enough

For the customers, such visibility allows them also to quickly see a developing fire condition and react accordingly. Exits and their corresponding paths of travel are more easily observed, thus minimizing panic and facilitating evacuation in a timely manner. Full visibility can be easily achieved by keeping the height of displays and displayed merchandise within the retail sales area below adult eye level. Where displays located around the perimeter of the retail sales area do not impact the ability to view the area, it is not necessary to limit their height. However, if it is desirable to have higher displays of merchandise within the retail sales area, equivalent means of achieving full visibility should be employed, such as the use of unobstructed surveillance mirrors strategically located throughout the sales area or the addition of more employees who can walk the sales floor and monitor the customers. [**1124:** A.7.3.15.2]

A.65.11.3.15.3 Flame breaks can be constructed of any of the following:

(1) Sheet steel
(2) Sheet aluminum not less than 0.010 in. (0.25 mm) thick
(3) Hardboard not less than ⅛ in. (3 mm) thick
(4) Gypsum board not less than ⅜ in. (10 mm) thick
(5) Wood panels not less than ⅛ in. (3 mm) thick
(6) Plywood not less than ¼ in. (6 mm) thick
(7) Particleboard not less than ¼ in. (6 mm) thick
(8) Cement fiberboard
(9) Plastic laminate not less than ⅛ in. (3 mm) thick
(10) Safety glass not less than ⅛ in. (3 mm) thick
(11) Other approved material

Where installed within a retail display fixture containing consumer fireworks, the flame break should impede or retard the rapid spread of an incipient fire involving the fireworks and their packaging materials as any of the following occurs:

(1) The fire progresses along a display level or shelf.
(2) The fire attacks another display level or shelf above.
(3) The fire attacks another display fixture abutting the display fixture of origin.

As a result of installing flame breaks to impede fire spread, the quantity and rate of smoke production can be retarded as well. Thus, flame breaks can provide the building occupants with additional time to react to an incipient fire and safely evacuate the building. See Figure A.65.11.3.15.3. [**1124:** A.7.3.15.3]

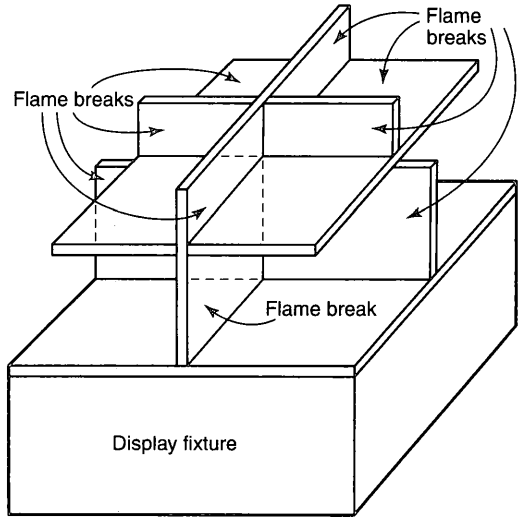

FIGURE A.65.11.3.15.3 Flame Break Design. [1124:Figure A.7.3.15.3]

A.65.11.3.15.3.3 The purpose of specifying packaged fireworks merchandise is to permit such merchandise to be used in longer lengths of displays of consumer fireworks without the installation of a flame break. It is presumed that packaged fireworks merchandise does not readily ignite when exposed to a fire developing within the retail display area merchandise and does not readily contribute to or accelerate a fire that might spread along the surface of a display. See Figure A.65.11.3.15.3.3. Since the purpose of a flame break is to slow down the rapid spread of a fire involving a retail display of consumer fireworks to allow occupants time to react and evacuate the immediate area, properly packaged fireworks merchandise can also serve the purpose of a flame break. For a description of packaged fireworks merchandise, see A.3.3.72, Covered Fuse. [**1124:** A.7.3.15.3.3]

A.65.11.3.15.6 This section describes performance criteria for how aerial devices, which are described in C.3.1.2 of NFPA 1124, are to be packaged, displayed, and restrained as needed, depending upon the device and the manner in which

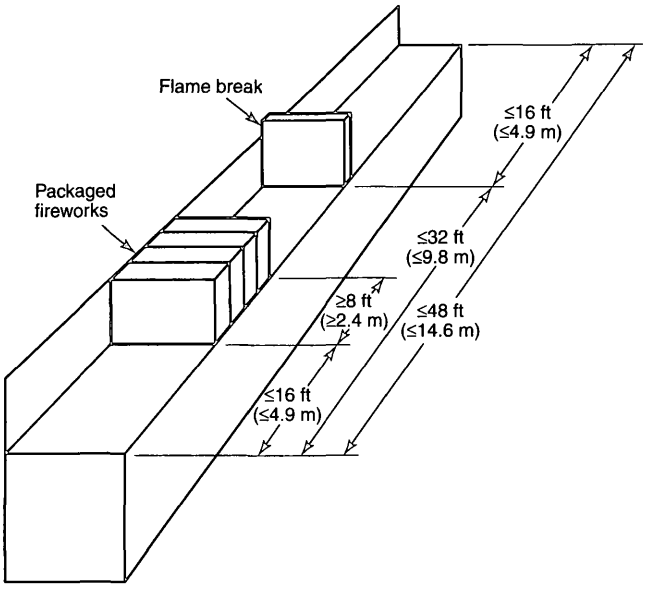

FIGURE A.65.11.3.15.3.3 Packaged Fireworks Merchandise and Flame Break Requirements. [1124:Figure A.7.3.15.3.3]

it is packaged and displayed. Thus, upon ignition by a fire in the retail sales display area containing devices, the resultant effect of the ejection of pyrotechnic components will be reasonably limited so as not to pose an undue threat to evacuating occupants or to cause rapid spread of the fire to areas remote from the immediate area of the fire.

The method and manner of packaging and displaying aerial devices have been demonstrated to be effective in accomplishing the intent of this section. This performance criterion could also be met by enclosing consumer fireworks within bins. The packaging material itself can be designed to contain the consumer fireworks. The placement and arrangement of the aerial devices within the packages or within bins or on shelves are also important factors. Other containment methods include fastening aerial devices together, restraining their movement with packaging materials, or placing aerial devices or packages of aerial devices within racks, containers, holders, or other structures. [1124: A.7.3.15.6]

A.65.11.3.15.7 Arrangement of horizontal plywood barriers should be as shown in Figure A.65.11.3.15.7. [1124: A.7.3.15.7]

A.65.11.3.21 Refer to Material Safety Data Sheet (MSDS) for additional information. [1124: A.7.3.21]

A.65.11.3.22 Training might be required by the U.S. Department of Transportation or the Occupational Safety and Health Administration as applicable for the purpose of being employed in the operation of a CFRS or storage facility. [1124: A.7.3.22]

A.65.11.4.8.1.2 NFPA 102 has been referenced for the purpose of determining the requirements for the means of egress in tents and membrane structures except as modified by 65.11.3.14 of this *Code* for special requirements for the retail sales of consumer fireworks. It should be noted that although 9-2.5 of NFPA 102 prohibits fireworks in any tent or temporary membrane structure, the intent is to prohibit the use, discharge, or ignition of fireworks within the tent or temporary membrane structure because unauthorized open flames are

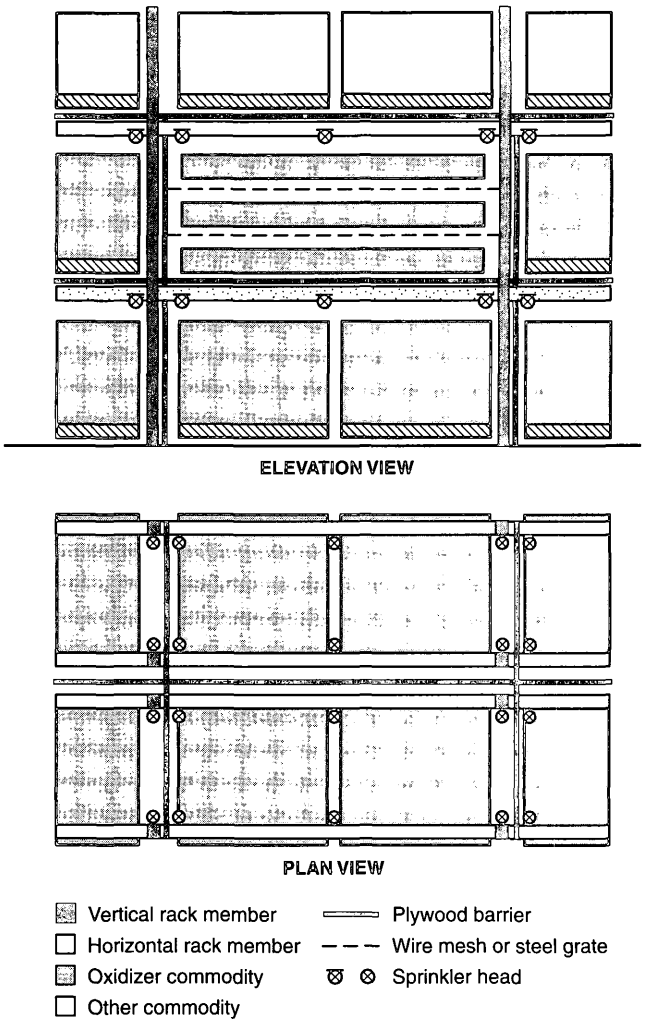

FIGURE A.65.11.3.15.7 Arrangement of Horizontal Barrier Separating Combustible Materials and Consumer Fireworks. [1124:Figure A.7.3.15.7]

also prohibited in the same section. Consumer fireworks in and of themselves do not pose an unusual fire hazard when they are stored or placed on display for retail sales within a tent or temporary membrane structure unless they are actually ignited or discharged. Section 65.11 in this *Code* contains several provisions that specifically deal with how fireworks can be safely displayed or stored in tents or temporary membrane structures for the purpose of selling them at retail. Those requirements are an effort to minimize the fire hazard associated with such fireworks. [1124: A.7.4.8.1.2]

A.65.11.4.9.2.4 See NFPA 30 for the separation distances. [1124: A.7.4.9.2.4]

A.65.11.5.1.1 Preliminary results of recent full scale fire tests indicate that automatic sprinkler systems designed for an Ordinary Hazard, Group 2 occupancy in accordance with NFPA 13 might be suitable for protecting retail displays of consumer fireworks where the ceiling height does not exceed 10 ft (3.1 m) and might also be adequate for ceiling heights up to 16 ft (4.9 m). This implies that there might be a need to design the sprinkler system in new buildings for an Extra Hazard,

Group 1 occupancy for ceiling heights greater than 16 ft (4.9 m). For existing buildings, existing sprinkler systems designed for an Ordinary Hazard, Group 2 occupancy should suffice. Until such time as additional fire testing is completed and more conclusive design criteria can be verified, designers of automatic sprinkler systems for areas where retail sales of consumer fireworks are located might want to consider these design criteria. For additional information contact the American Pyrotechnics Association (APA), PO Box 30438, Bethesda, MD 20824. [**1124:** A.7.5.1.1]

A.65.11.5.1.2(3) This item describes performance criteria for how consumer fireworks displayed for sale in stores are to be packaged and displayed and restrained as needed, depending upon the device and the manner in which it is packaged and displayed. Thus, upon ignition by a fire in the retail sales display area containing consumer fireworks, the resultant effect of the ejection of pyrotechnic components will be reasonably limited so as not to pose an undue threat to evacuating occupants or to cause rapid spread of the fire to areas remote from the immediate area of the fire. The method and manner of packaging and displaying consumer fireworks have been demonstrated to be effective in accomplishing the intent of this section. The performance criteria might also be met by enclosing consumer fireworks within bins. The packaging material itself can be designed to contain the consumer fireworks. The placement and arrangement of the consumer fireworks within the packages or within bins or on shelves are also important factors. Other containment methods include fastening consumer fireworks together, restraining their movement with packaging materials, or placing consumer fireworks or packages of consumer fireworks within racks, containers, holders, or other structures. [**1124:** A.7.5.1.2(3)]

A.66.1.1 See A.1.3.2.

A.66.1.3(1) Liquids that are solid at 100°F (37.8°C) or above, but are handled, used, or stored at temperatures above their flash points, should be reviewed against pertinent sections of this *Code*. [**30:** A.1.1.2(1)]

A.66.1.3(3) Certain mixtures of flammable or combustible liquids and halogenated hydrocarbons either do not exhibit a flash point using the standard closed-cup test methods or will exhibit elevated flash points. However, if the halogenated hydrocarbon is the more volatile component, preferential evaporation of this component can result in a liquid that does have a flash point or has a flash point that is lower than the original mixture. In order to evaluate the fire hazard of such mixtures, flash point tests should be conducted after fractional evaporation of 10, 20, 40, 60, or even 90 percent of the original sample or other fractions representative of the conditions of use. For systems such as open process tanks or spills in open air, an open-cup test method might be more appropriate for estimating the fire hazard. [**30:** A.1.1.2(3)]

A.66.1.3(4) See NFPA 30B. [**30:** A.1.1.2(4)]

A.66.1.3(6) Requirements for transportation of flammable and combustible liquids are found in NFPA 385 and in 49 CFR 100–199. [**30:** A.1.1.3(1)]

A.66.1.3(7) See NFPA 31. [**30:** A.1.1.3(2)]

A.66.1.6 The classification of liquids is based on flash points that have been corrected to sea level, in accordance with the relevant ASTM test procedures. At high altitudes, the actual flash points will be significantly lower than those either observed at sea level or corrected to atmospheric pressure at sea level. Allowances could be necessary for this difference in order to appropriately assess the risk.

Table A.66.1.6 presents a comparison of the definitions and classification of flammable and combustible liquids, as set forth in Section 1.7 of NFPA 30 *(see 3.3.148)*, with similar definitions and classification systems used by other regulatory bodies.

The Hazardous Materials Regulations of the U.S. Department of Transportation (DOT), as set forth in the 49 CFR 173.120(b)(2) and 173.150(f), provide an exception whereby a flammable liquid that has a flash point between 100°F (37.8°C) and 141°F (60.5°C) and does not also meet the definition of any other DOT hazard class can be reclassified as a combustible liquid [i.e., one having a flash point above 141°F (60.5°C)] for shipment by road or rail within the United States. [**30:** A.1.7.3]

A.66.1.6.2 For the purposes of this *Code*, a material with a Reid Vapor Pressure greater than 40 psia (2068 mm Hg absolute) is considered to be a gas and is, therefore, not within the scope of NFPA 30. See NFPA 58. [**30:** A.1.7.3.2]

A.66.2.3.1.1 Appendix E of API Standard 650, *Welded Steel Tanks for Oil Storage*, and Appendix B of API 620, *Recommended Rules for the Design and Construction of Large, Welded, Low-Pressure Storage Tanks*, provide information on tank foundations. [**30:** A.4.3.1.1]

A.66.2.3.1.3 For further information, see ASTM E 119, *Standard Test Methods for Fire Tests of Building Construction and Materials*, and UL 1709, *Standard for Rapid Rise Fire Tests of Protection Materials for Structural Steel*. [**30:** A.4.3.1.3]

A.66.2.3.2 See PEI RP200, *Recommended Practices for Installation of Aboveground Storage Systems for Motor Vehicle Fueling*, for additional information. [**30:** A.4.3.2]

A.66.2.3.2.4.4 Examples of liquids with minimal potential for accumulation of static charge include crude oil, asphalt, and water-miscible liquids. For additional information, see NFPA 77. [**30:** A.4.3.2.5.4]

A.66.2.4.3.3 See NFPA 51B. [**30:** A.4.5.3.3]

A.66.2.4.3.4 The prevention of electrostatic ignition in equipment is a complex subject. Refer to NFPA 77 or manufacturer's recommendations for guidance. [**30:** A.4.5.3.4]

A.66.2.5.4.1 For further information, see API 2015, *Cleaning Petroleum Storage Tanks;* API 2015A, *A Guide for Controlling the Lead Hazard Associated with Tank Entry and Cleaning;* and API 2015B, *Cleaning Open Top and Covered Floating Roof Tanks*. [**30:** A.4.6.4.1]

A.66.2.5.5.4(2) Special training might be required. [**30:** A.4.6.5.4(2)]

A.66.2.5.6 See NFPA 329 for information on testing methods. [**30:** A.4.6.6]

A.66.2.5.7.1 Regular inspections of aboveground storage tanks, performed in accordance with national standards, provide a means to ensure system maintenance. Acceptable standards include, but are not limited to, the following:

(1) API 653, *Tank Inspection, Repair, Alteration, and Reconstruction*
(2) STI SP001-01, *Standard for Inspection of In-Service Shop Fabricated Aboveground Tanks for Storage of Combustible and Flammable Liquids*

Table A.66.1.6 Comparative Classification of Liquids

Agency	Agency Classification	Agency Flash Point °F	Agency Flash Point °C	NFPA Definition	NFPA Classification	NFPA Flash Point °F	NFPA Flash Point °C
ANSI/CMA Z129.1-1994	Flammable	<141	<60.5	Flammable	Class I	<100	<37.8
				Combustible	Class II	≥100 to <140	≥37.8 to <60
					Class IIIA	≥140 to <200	≥60 to <93
	Combustible	≥141 to <200	≥60.5 to <93	Combustible	Class IIIA	≥140 to <200	≥60 to <93
DOT	Flammable	<141	<60.5	Flammable	Class I	<100	<37.8
				Combustible	Class II	≥100 to <140	≥37.8 to <60
					Class IIIA	≥140 to <200	≥60 to <93
	Combustible	≥141 to <200	≥60.5 to <93	Combustible	Class IIIA	≥140 to <200	≥60 to <93
DOT HM-181 Domestic Exemption[a]	Flammable	<100	<37.8	Flammable	Class I	<100	<37.8
	Combustible	≥100 to <200	≥37.8 to <93	Combustible	Class II	≥100 to <140	≥37.8 to <60
					Class IIIA	≥140 to <200	≥60 to <93
UN	Flammable	<141	<60.5	Flammable	Class I	<100	< 37.8
				Combustible	Class II	≥100 to <140	≥37.8 to <60
					Class IIIA	≥140 to <200	≥60 to <93
	Combustible	≥141 to <200	≥60.5 to <93	Combustible	Class II	≥100 to <140	≥37.8 to <60
					Class IIIA	≥140 to <200	≥60 to <93
OSHA	Flammable	<100	<37.8	Flammable	Class I	<100	<37.8
	Combustible[b]	≥100	≥37.8	Combustible	Class II	≥100 to <140	≥37.8 to <60
					Class IIIA	≥140 to <200	≥60 to <93
					Class IIIB[b]	≥200	≥93

[a]See A.66.1.6.
[b]See 29 CFR 1910.106 for Class IIIB liquid exemptions.
[30:Table A.1.7.3]

(3) API 12R1, *Setting, Maintenance, Inspection, Operation, and Repair of Tanks in Production Service*
(4) API 2350, *Overfill Protection for Storage Tanks in Petroleum Facilities* [30: A.4.6.7.1]

A.66.2.5.7.4 For additional information, see API 653, *Tank Inspection, Repair, Alteration, and Reconstruction.* [30: A.4.6.7.4]

A.66.4.2.1(5) The term *rigid nonmetallic intermediate bulk container* is used to describe intermediate bulk containers that have a plastic vessel that serves as the primary liquid-holding component. This vessel can be enclosed in or encased by an outer structure consisting of a steel cage, a single-wall metal or plastic enclosure, or a double wall of foamed or solid plastic. These are often called *composite IBCs,* which is the term used by U.S. Department of Transportation (DOT) to describe them. The term *rigid nonmetallic intermediate bulk container* also denotes an all-plastic single-wall IBC that could or could not have a separate plastic base and for which the containment vessel also serves as the support structure. IBCs that have an outer liquidtight metal structure are considered to be metal IBCs or metal portable tanks by DOT and are defined in 66.4.2.1(1). [30: A.6.2.1(5)]

A.66.4.3.4 Venting of storage cabinets has not been demonstrated to be necessary for fire protection purposes. Additionally, venting a cabinet could compromise the ability of the cabinet to adequately protect its contents from involvement in a fire because cabinets are not generally tested with any venting. Therefore, venting of storage cabinets is not recommended.

However, it is recognized that some AHJs can require storage cabinets to be vented and that venting can also be desirable for other reasons, such as health and safety. In such cases, the venting system should be installed so as to not affect substantially the desired performance of the cabinet during a fire. Means of accomplishing this can include thermally actuated dampers on the vent openings or sufficiently insulating the vent piping system to prevent the internal temperature of the cabinet from rising above that specified. Any make-up air to the cabinet should also be arranged in a similar manner.

If vented, the cabinet should be vented from the bottom with make-up air supplied to the top. Also, mechanical exhaust ventilation is preferred and should comply with NFPA 91. Manifolding the vents of multiple storage cabinets should be avoided. [30: A.6.3.4]

A.66.4.4 See Chapter 3 of NFPA 30 for definitions. See Figure A.66.4.4(a) and Figure A.66.4.4(b) for explanatory information on the types of inside liquid storage areas. See Annex D and Annex E of NFPA 30 for information on protection criteria. [30: A.6.4]

A.66.4.4.2.4 Release of a Class IA liquid into a room or enclosure can result in the evolution of large quantities of flammable vapor. The ignition of this flammable mixture can result in a significant pressure rise, the production of hot combustion gases, and flame. Failure to adequately design a room or building for this type of event can result in the failure of the room/building walls and/or roof and the uncontrolled release of the hot combustion gases, flames, and pressure. An acceptable method of protection against this type of event is the use of damage-limiting construction consisting of a combination of pressure relieving and pressure-

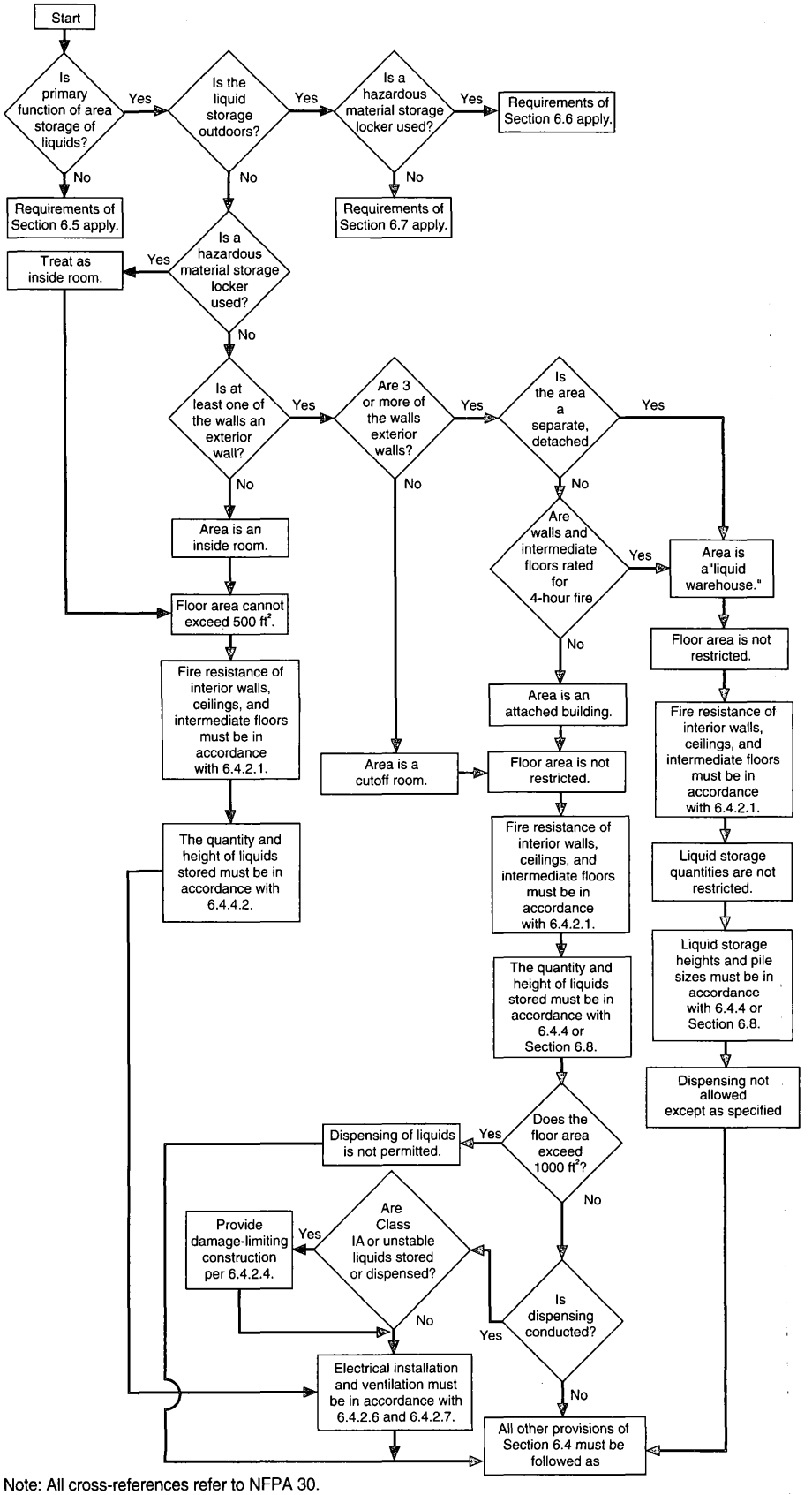

Note: All cross-references refer to NFPA 30.

FIGURE A.66.4.4(a) Guide to Application of Section 66.4, Container and Portable Tank Storage. [30:Figure A.6.4(a)]

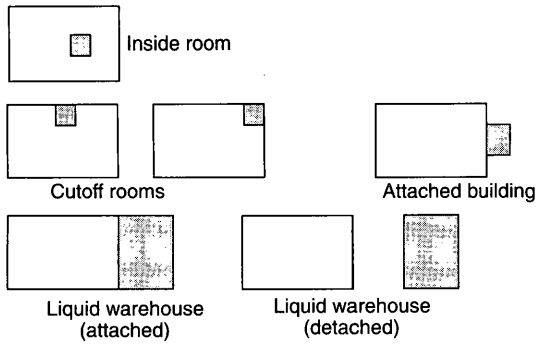

FIGURE A.66.4.4(b) Examples of the Various Inside Liquid Storage Areas. Shaded Areas Are the Liquid Storage Areas. [30:Figure A.6.4(b)]

resistant construction as described in NFPA 68 and other standards. [30: A.6.4.2.4]

A.66.4.4.2.5 Spill containment can be accomplished by any of the following:

(1) Noncombustible, liquidtight raised sills, curbs, or ramps of suitable height at exterior openings
(2) Noncombustible, liquidtight raised sills, curbs, or ramps of suitable height, or other flow-diverting structures at interior openings
(3) Sloped floors
(4) Open-grate trenches or floor drains that are connected to a properly designed drainage system
(5) Wall scuppers that discharge to a safe location or to a properly designed drainage system
(6) Other means that are acceptable to the AHJ

Where sills, curbs, or ramps are used, the appropriate height will depend on a number of factors, including the maximum expected spill volume, the floor area, and the existence of any drainage systems. Historically, curbs and sills have been 4 in. (100 mm) high.

A variety of curb, sill, and ramp heights can be used to obtain the desired containment volume. As a guide, 1 ft^2 of water at a 1 in. depth equals 0.62 gal (1 m^2 of water at a depth of 25 mm equals 25 L). Once the total quantity of liquid containment has been established, the necessary curb, sill, or ramp height can then be calculated.

Where open-grate trenches are used, the volume of the trench should be able to contain the maximum expected spill volume or otherwise be connected to a properly designed drainage system.

It should be noted that these containment and drainage provisions address only fire protection concerns. Consult the appropriate environmental regulations for other restrictions that could apply. *(See 1.5.3 of NFPA 30.)* [30: A.6.4.2.5]

A.66.4.4.4.1 The other arrangements referred to in the Exception include, but are not limited to, increases in pile height, pile size, or maximum total quantity stored, or use of multiple-row racks or high-rise warehouses. [30: A.6.4.4.1]

A.66.4.5.2.4 Exception No. 2 is based on work done by FM Global, which showed that flammable liquids in plastic containers could cause uncontrollable fires under certain conditions of storage in general-purpose warehouses. A research project on flammable liquids container storage carried out by Underwriters Laboratories Inc., under the auspices of the National Fire Protection Research Foundation, has suggested a test protocol that can judge the capability of packaging systems to withstand a small ignition source or to minimize the rate at which the lading is released from the containers, so that the fire can be controlled by automatic sprinklers.

There is currently no nationally recognized consensus standard for conducting such tests. [30: A.6.5.2.4]

A.66.4.6 Environmental concerns have dictated special handling of hazardous materials, chemicals, and wastes. Some of these have flammable and combustible liquid characteristics, in addition to their environmental and health problems, thus causing some questions as to how they should be stored and handled.

Several manufacturers have met this problem by designing and manufacturing movable, modular prefabricated storage lockers, working diligently with various building officials and AHJs. This results in a product that is intended to meet government standards and regulations for hazardous materials storage. Several municipalities have passed model ordinances covering the design, construction, and location of hazardous materials storage lockers. Design features can include, but are not limited to, the following:

(1) Secondary spill containment sumps
(2) Deflagration venting
(3) Ventilation requirements, including mechanical ventilation where dispensing operations are expected
(4) Electrical equipment for hazardous locations in accordance with NFPA 70
(5) Static electricity control
(6) Fire suppression systems (dry chemical or sprinklers)
(7) Heavy structural design for the following:
    (a) Security provisions
    (b) Doors that lock and permit pallet loading
    (c) Wind load, snow load, and storage load conditions
    (d) Anchorage provisions
    (e) Skid design, permitting relocation using lift trucks
(8) Fire-rated exterior walls, if required
(9) Interior partitions to segregate incompatible materials
(10) Size limits to limit quantities that can be stored within preassembled or ready-to-assemble designs
(11) Nonsparking floors
(12) Shelving, if required
(13) Heating or cooling units, if needed
(14) Corrosion protection as required
(15) Employee safety provisions (eye/face wash)
(16) NFPA 704 hazard symbols

Features provided are determined by specific storage requirements and needs of the owner, keeping in mind applicable regulations and ordinances that apply and the approval requirements of the AHJ.

Several testing laboratories have developed internal procedures for the examination, testing, and listing or labeling of hazardous materials storage lockers submitted by manufacturers. [30: A.6.6]

A.66.4.8 See Annex E of NFPA 30 for limitations of the protection criteria of Table 66.4.8.2(a) through Table 66.4.8.2(k), particularly for intermediate bulk containers and portable tanks having capacities greater than 60 gal (230 L). [30: A.6.8]

A.66.4.8.1.3 Table A.66.4.8.1.3 provides examples of commonly used metal containers that are considered either relieving style or nonrelieving style for use in developing protected storage arrangements in accordance with Table 66.4.8.2(a)

Table A.66.4.8.1.3 Common Relieving- and Nonrelieving-Style Metal Containers

Container Type	Relieving Style	Nonrelieving Style
≤1 qt[a]	All	N/A
>1 qt and ≤6 gal[a]	Metal containers with plastic cap, or flexible or rigid plastic spout with plastic cap	Metal containers with steel spout and steel screw cap
≤1 gal, friction lid	Metal containers with metal friction-fit covers (e.g., paint can lid)	N/A
1 gal and ≤6 gal (lug cover)	Metal containers with metal covers held in place with a mechanical friction-fit (e.g., lug-type) closure mechanism	N/A
>6 gal and ≤60 gal[b,c] (drums)	Metal containers, tight or open-head (drums) having at least one 2 in. plastic plug: (Note: cap seals, if used, need to be plastic and nonmetallic)	Open head metal containers with steel covers having no steel flange openings; or open head and tight head metal containers with steel flange openings where only steel plugs and/or cap seals are used
>60 gal and ≤793 gal	Metal portable tanks or metal intermediate bulk containers with at least one relief device conforming to the design, construction, and capacity of the container's section *(see Section 6.2 of NFPA 30)*	N/A

Note: For SI units, 1 gal = 3.8 L.

[a]All containers ≤1 qt are considered relieving style because their failure is inconsequential.

[b]In full-scale fire tests, where containers were provided with both ¾ in. (19 mm) and 2 in. (50 mm) relieving vent openings and, in some cases, both vents were obstructed by pallet slats, rupture of containers did not occur. Because it is not possible to determine if all conceivable obstruction scenarios were represented, where drums are stacked more than one high, provide an additional ¾ in. (19 mm) or 2 in. (50 mm) pressure-relieving mechanism.

[c]The use of plastic plugs instead of steel plugs (bungs) in a steel drum in order to achieve a relieving-style container should contemplate the following issues in order to assure the safe storage of liquids:

(1) The compatibility of the plastic plug materials and gaskets with the liquids being stored.

(2) The stability and shelf life of the liquids being stored as the plastic plugs can admit water vapor, oxygen, and light.

(3) The difference in expansion coefficients for plastic plugs and steel drums for those drums subject to temperature variations and hot or cold conditions.

(4) The tooling issues involved with the use of plastic plugs as the torque levels are different from those levels used for steel plugs.

(5) The training of fill line operators in order to avoid cross-threading and/or the stripping of threads.

(6) The voiding of the United Nations (UN) rating on the steel drum by installing plastic plugs. If the user needs to install a plug other than the one originally provided by the container manufacturer, then the user should contact the manufacturer to ensure that the UN rating will still be valid. [**30**:Table A.6.8.1.3]

through Table 66.4.8.2(d) and Table 66.4.8.2(h). [**30:** A.6.8.1.3]

A.66.4.8.1.6 Interpolation between 66.4.8.1.6(1) and 66.4.8.1.6(2) of NFPA 30 is allowed. [**30:** A.6.8.1.6]

A.66.4.8.1.7 Unsaturated polyester resins (UPRs) are high molecular weight unsaturated polymers dissolved in a reactive monomer, usually styrene, in concentrations of 50 percent or less by weight. UPRs are combined with reinforcements such as fiberglass and/or fillers to produce a wide range of products. Examples of such products include automobile parts, bathroom tubs and shower stalls, cultured marble, and many products for architectural, recreational, construction, and corrosion-resistant applications. UPRs are normally packaged in 55 gal (208 L) drums. The U.S. Department of Transportation classification for UPRs is "UN 1866, Resin Solution"; however, it should be noted that this classification includes many materials that are not unsaturated polyester resins. [**30:** A.6.8.1.7]

A.66.4.8.2 Protected storage allowed under previous editions of the *Code* or NFPA 30 can be continued if the class of liquids stored, the quantity of liquids stored, fire protection, and building configuration remain unchanged. Table A.66.4.8.2(a) and Table A.66.4.8.2(b), reprinted here from the 1993 edition of NFPA 30, can be used as a reference for storage arrangements in previously approved, protected, inside liquid storage areas.

For certain liquids such as ketones, esters, and alcohols, the minimum required densities established in the listing criteria for foam discharge devices are often higher than the general densities specified for protection of flammable and combustible liquids. When determining the design criteria for extinguishing systems using foam, it is important to ensure that the listing criteria, which are typically based on empirical data from fire tests, are not overlooked. Otherwise, the fire protection system design can be inadequate for proper protection.

ESFR sprinklers have been tested for protection of liquids only to the extent reflected in the tables in 66.4.8. Any other use of ESFR sprinklers for protection of liquids should be based on an engineering analysis that evaluates the potential failure of the sprinkler system based on a rapid growth fire or a large pool fire that would operate more sprinklers than are

Table A.66.4.8.2(a) Storage Arrangements for Protected Palletized or Solid Pile Storage of Liquids in Containers and Portable Tanks

Liquid Class	Storage Level	Maximum Storage Height (ft)		Maximum Quantity per Pile (gal)		Maximum Quantity[a] (gal)	
		Containers	Portable Tanks	Containers	Portable Tanks	Containers	Portable Tanks
IA	Ground floor	5	—	3,000	—	12,000	—
	Upper floors	5	—	2,000	—	8,000	—
	Basement	NP	NP	—	—	—	—
IB	Ground floor	6½	7	5,000	20,000	15,000	40,000
	Upper floors	6½	7	3,000	10,000	12,000	20,000
	Basement	NP	NP	—	—	—	—
IC	Ground floor	6½[b]	7	5,000	20,000	15,000	40,000
	Upper floors	6½[b]	7	3,000	10,000	12,000	20,000
	Basement	NP	NP	—	—	—	—
II	Ground floor	10	14	10,000	40,000	25,000	80,000
	Upper floors	10	14	10,000	40,000	25,000	80,000
	Basement	5	7	7,500	20,000	7,500	20,000
III	Ground floor	20	14	15,000	60,000	55,000	100,000
	Upper floors	20	14	15,000	60,000	55,000	100,000
	Basement	10	7	10,000	20,000	25,000	40,000

Notes:
(1) For SI units, 1 ft = 0.3 m; 1 gal = 3.8 L.
(2) NP = not permitted.
[a]Applies only to cut-off rooms and attached buildings.
[b]These height limitations can be increased to 10 ft for containers of 5 gal capacity or less.
[**30:** Table A.6.8.2(a)]

Table A.66.4.8.2(b) Storage Arrangements for Protected Rack Storage of Liquids in Containers

Liquid Class	Type Rack	Storage Level	Maximum Storage Height of Containers (ft)	Maximum Quantity of Containers (gal)[a,b]
IA	Double row or single row	Ground floor	25	7,500
		Upper floors	15	4,500
		Basement	NP	—
IB	Double row or single row	Ground floor	25	15,000
IC		Upper floors	15	9,000
		Basement	NP	—
II	Double row or single row	Ground floor	25	24,000
		Upper floors	25	24,000
		Basement	15	9,000
III	Multirow, double row, or single row	Ground floor	40	55,000
		Upper floors	20	55,000
		Basement	20	25,000

Notes:
(1) For SI units, 1 ft = 0.3 m; 1 gal = 3.8 L.
(2) NP = not permitted.
[a]Maximum quantity allowed on racks in cut-off rooms and attached buildings.
[b]Maximum quantity allowed per rack section in liquid warehouses.
[**30:** Table A.6.8.2(b)]

accommodated by the design area. The use of ESFR protection, particularly without provisions for the control of spread of liquid, presents the possibility of a liquid pool fire that could exceed the limited design operating area of an ESFR system.

The information in Table 66.4.8.2(a) through Table 66.4.8.2(k) was developed from full-scale fire tests. Where only one K-factor sprinkler is allowed, this was the only size proven to provide fire control. Where a choice of K-factors is allowed by the tables, each was able to provide fire control; however, the larger K-factor sprinklers sometimes demonstrated better fire control and further limited fire damage. Where only one response type of sprinkler is allowed, this is the only type of sprinkler proven to provide fire control. Where a choice of response characteristics (SR or QR) is allowed by the tables, each was able to provide fire control; however, the QR sprinklers sometimes demonstrated better fire control and further limited fire damage. [**30:** A.6.8.2]

A.66.4.8.2.8 Most fire tests using foam-water protection schemes have been conducted with immediate foam solution discharge from the operating sprinklers. If an appreciable delay is encountered before properly proportioned foam is discharged, control of the fire might not be established. One method of accomplishing immediate foam solution discharge is by using an in-line balanced pressure (ILBP) proportioning system. [**30:** A.6.8.2.8]

A.66.4.8.5.1 Paragraph 66.4.8.5.1 requires that control of liquid spread be provided to prevent a pool fire on the floor from spreading and opening more sprinkler heads than the design of the sprinkler system anticipates. For example, if the sprinkler system is designed to provide 0.45 gpm/ft^2 over 3000 ft^2 (18 mm/min over 280 m^2), 66.4.8.5.1 requires that the spread of liquid also be limited to 3000 ft^2 (280 m^2). Various means are available to achieve this control.

Typical methods use trench or spot drains that divide the floor of the storage area into rectangles having areas equal to or less than the design area of the sprinkler system. Drains are centered under racks, and the floor is sloped toward the drain trenches with a minimum slope of 1 percent. The floor is made highest at the walls. See Figure A.66.4.8.5.1(a) and Figure A.66.4.8.5.1(b). Trenches are arranged as described in NFPA 15 and as shown in Figure A.66.4.8.5.1(c). Note particularly the dimensions of the trenches, and note that the solid covering spans one-third of the width on either side of the open grate and the open grate spans the middle third. Spot drains can be similarly arranged.

Another method, shown in Figure A.66.4.8.5.1(d), uses spot drains located at building columns, where the area between any four columns does not exceed the design area of the sprinkler system. The floor is sloped to direct water flow to the drains.

Connections to the drains are provided at trapped sumps, arranged as described in NFPA 15 *[see Figure A.66.4.8.5.1(e)]*. To provide a safety factor, the drain pipes are sometimes sized to carry 150 percent of anticipated sprinkler discharge. The following equation can be used to calculate the flow of the drain pipe:

$$F = 1.5DA$$

where:
F = flow (gpm or L/min)
D = sprinkler design density (gpm/ft^2 or L/min/m^2)
A = sprinkler design area (ft^2 or m^2)

Additional information can be found in *Guidelines for Safe Warehousing of Chemicals*, Center for Chemical Process Safety, American Institute of Chemical Engineers. [**30:** A.6.8.5.1]

A.66.4.10.1 The indiscriminate mixed storage of materials that have a high toxicity or high reactivity hazard that are also flammable liquids is a practice that could result in either a catastrophic release of toxic materials or an explosion. *(See also Section 1.2 and A.1.2 of NFPA 30.)* [**30:** A.6.10.1]

A.66.4.10.2 Paragraph 4.2.3.2 of NFPA 505 states, "In locations used for the storage of flammable liquids in sealed containers or liquefied or compressed flammable gases in containers, approved power-operated industrial trucks designated as Types CNS, DS, ES, GS, LPS, GS/CNS, or GS/LPS shall be permitted to be used where approved by the AHJ." Compared to the above types, industrial trucks that are designated DY and EE have significantly less potential for igniting flammable vapors (such as might result from a spill of Class I liquid) and should be used in inside liquid storage areas where conditions warrant. [**30:** A.6.10.2]

A.66.5.1.2 These provisions might not provide adequate protection for operations involving hazardous materials or chemical reactions, nor do they consider health hazards resulting from exposure to such materials. [**30:** A.7.1.2]

A.66.5.3.2.3 Equipment operated at pressures over 70 bar gauge (1000 psig or a gauge pressure of 7000 kPa) could require greater spacing. [**30:** A.7.3.2.3]

A.66.5.3.3.1 See NFPA 220. [**30:** A.7.3.3.1]

A.66.5.3.3.2 API 2218, *Fireproofing Practices in Petroleum and Petrochemical Processing Plants*, contains guidance on selecting and installing fire-resistant coatings to protect exposed steel supports from a high-challenge fire exposure. It also contains a general discussion on determining need for such protection and estimating the extent of the area exposed. [**30:** A.7.3.3.2]

A.66.5.3.3.4 NFPA 204 provides information on this subject. [**30:** A.7.3.3.4]

A.66.5.3.3.5 NFPA *101* provides information on the design of exit facilities. [**30:** A.7.3.3.5]

A.66.5.3.3.7 NFPA 68 provides information on this subject. [**30:** A.7.3.3.7]

A.66.5.3.4.2 Equipment in enclosed processing areas can deteriorate over time, and periodic evaluation should be conducted to ensure that leakage rates have not increased or that the ventilation rate is adequate for any increase in leakage rates. [**30:** A.7.3.4.2]

A.66.5.3.4.4 NFPA 91 and NFPA 90A provide information on this subject. [**30:** A.7.3.4.4]

A.66.5.3.5.1 This might require curbs, scuppers, or special drainage systems to control the spread of fire. Annex A of NFPA 15 provides information on this subject. [**30:** A.7.3.5.1]

A.66.5.3.7.8 The process area is not intended to be a liquid container storage area. However, it is recognized that containers of liquids are brought into the area to use in the processes and that as a result of the processes, liquids could be filled into containers in the process area.

The amount of liquid in containers in the process area should be limited as much as possible. Full containers should not be stored in the process area but can be staged there. Only the amount of liquid needed for one continuous 24-hour

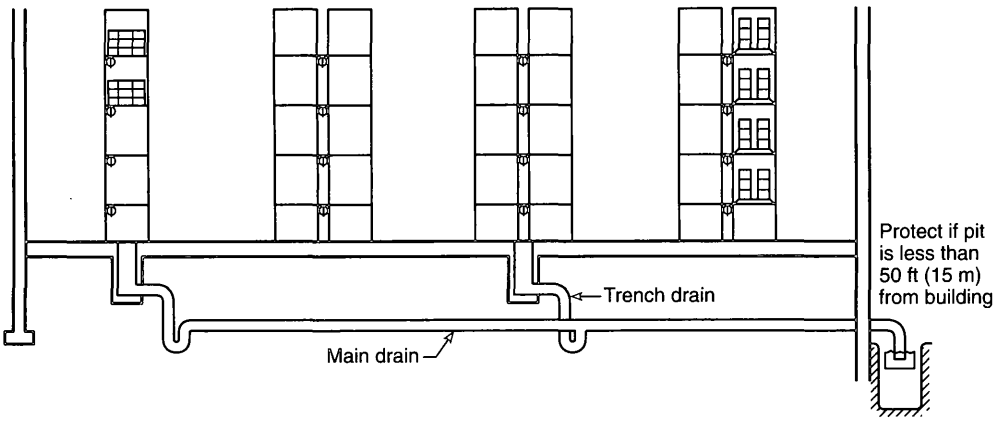

FIGURE A.66.4.8.5.1(a) General Scheme for Warehouse Spill Control of Liquids. [30:Figure A.6.8.5.1(a)]

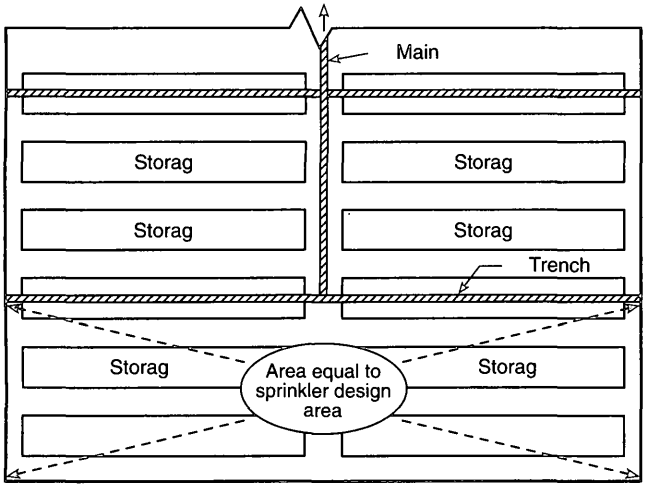

FIGURE A.66.4.8.5.1(b) Plan View of Warehouse Spill Control of Liquids. [30:Figure A.6.8.5.1(b)]

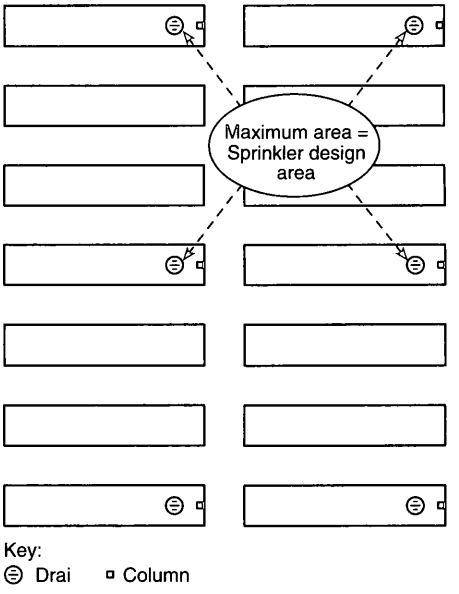

FIGURE A.66.4.8.5.1(d) Typical Arrangement of Floor Drains. [30:Figure A.6.8.5.1(d)]

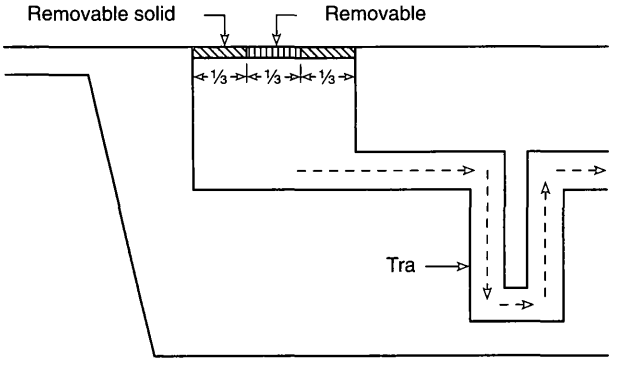

FIGURE A.66.4.8.5.1(c) Details of Drainage Trench Design. [30:Figure A.6.8.5.1(c)]

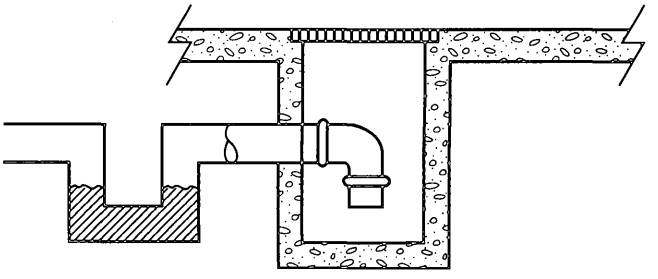

FIGURE A.66.4.8.5.1(e) Details of Liquid-Seal Trap. [30:Figure A.6.8.5.1(e)]

period should be brought into the process area in full containers. Partial containers can remain in the process area as long as they do not increase the hazard present. Containers that were filled in the process area can remain there during the shift that they were filled but should be relocated to the appropriate storage area before the end of the workday or shift in the case of 24-hour-a-day operations. [**30:** A.7.3.7.8]

A.66.5.3.8 Where the vapor space of equipment is usually within the flammable range, the probability of explosion damage to the equipment can be limited by inerting, by providing an explosion suppression system, or by designing the equipment to contain the peak explosion pressure that can be modified by explosion relief. Where the special hazards of operation, sources of ignition, or exposures indicate a need, consideration should be given to providing protection by one or more of the above means.

See NFPA 68 and NFPA 69 for additional information on various methods of mitigating losses from explosions. [**30:** A.7.3.8]

A.66.5.4.1 Incidental operations are operations that utilize liquids only as a limited activity to that which establishes the occupancy classification. Examples include automobile assembly, assembly of electronic equipment, furniture manufacturing, and areas within refineries, distilleries, and chemical plants where the use of liquids is incidental, such as in maintenance shops, office equipment, or vehicle repair shops. Some more detailed descriptions follow:

(1) *Vehicle Assembly.* Vehicle assembly operations usually involve both process and incidental use of liquids. An example of a process operation would be paint storage and mixing utilized for application of the vehicle primer, color coats, and clear coats. For these operations, the requirements of Section 7.3 of NFPA 30 apply. Examples of incidental use would be sealer deck wipedown operations, windshield washer solvent dispensing, brake fluid filling, and final line paint repair operations. These operations might be continuous. However, the quantities of liquids used and the vapor exposures are significantly reduced from larger volume usage found within vehicle body component paint mixing and storage operations.

(2) *Assembly of Electrical Equipment.* Examples of incidental use of liquids in these types of occupancies might include "photoresist" coating operations, "softbaking" operations, wave solder operations, and wipedown operations.

(3) *Chemical Plant Maintenance Shop.* Incidental use of liquids is commonplace in maintenance shops located within a chemical plant. Examples are cutting oils used in a machine shop, Class II solvents for degreasing, and Class I and II paint solvents and fuels associated with automotive and industrial truck repair.

(4) *Cleaning and Sanitation.* Under provisions established by the U.S. Food and Drug Administration (FDA) in 21 CFR, "GMP for Medical Devices," Class I and Class II liquids can be used for cleaning and sanitation purposes. Limited quantities are used to remove manufacturing materials, mold release compounds, and other contaminants not intended to be on the final product. An example would be the use of isopropyl alcohol (IPA), transferred to a cleaning wipe via a plunger-type liquid-dispensing container. The cleaning wipe is then used to remove manufacturing materials not intended to be on the final product. The key point here is not that the liquid is not part of the final product, but that limited quantities of liquid are used and the use is incidental to the manufacturing operation that produces the product. [**30:** A.7.5.1]

A.66.5.4.5(3) NFPA 91 provides information on the design and installation of mechanical ventilation. [**30:** A.7.5.5(3)]

A.66.5.5.3 Use of fixed fire protection systems, dikes, fire-rated barriers, or a combination of any of these can provide suitable protection from exposures. [**30:** A.7.6.3]

A.66.5.5.4 The intent of this requirement is to prevent the spread of uncontrolled, spilled liquid from traveling beyond the loading or unloading area and exposing surrounding equipment and buildings. [**30:** A.7.6.4]

A.66.5.5.6 The use of nonconductive materials in the fill pipe assembly should be avoided to prevent any electrical discontinuity in the piping of the system. Serious accidents have occurred when nonconductive materials, such as plastic or rubber hose, have been used in the fill pipe assembly. [**30:** A.7.6.6]

A.66.5.5.10.4 NFPA 77 provides additional information on protection against static electricity. [**30:** A.7.6.10.4]

A.66.5.5.11.2 NFPA 77 provides additional information on static electricity protection. [**30:** A.7.6.11.2]

A.66.5.5.12 The term *switch loading* describes a situation that warrants special consideration.

When a tank is emptied of a cargo of Class I liquid, a mixture of vapor and air is left, which can be, and often is, within the flammable range. When such a tank is refilled with a Class I liquid, any charge that reaches the tank shell will be bled off by the required bond wire. Also, there will be no flammable mixture at the surface of the rising oil level because the Class I liquid produces at its surface a mixture too rich to be ignitable. This is the situation commonly existing in tank vehicles in gasoline service. If, as occasionally happens, a static charge does accumulate on the surface sufficient to produce a spark, it occurs in a too-rich, nonignitable atmosphere and thus causes no harm.

A very different situation arises if the liquid is "switch loaded," that is, when a Class II or Class III liquid is loaded into a tank vehicle that previously contained a Class I liquid.

Class II or Class III liquids are not necessarily more potent static generators than the Class I liquid previously loaded, but the atmosphere in contact with the rising oil surface is not enriched to bring it out of the flammable range. If circumstances are such that a spark should occur either across the oil surface or from the oil surface to some other object, the spark occurs in a mixture that can be within the flammable range, and an explosion can result.

It is emphasized that bonding the tank to the fill stem is not sufficient; a majority of the recorded explosions have occurred when it was believed the tank had been adequately bonded. The electrostatic potential that is responsible for the spark exists inside the tank on the surface of the liquid and cannot be removed by bonding. Measures to reduce the change of such internal static ignition can be one or more of the following:

(1) Avoid spark promoters. Conductive objects floating on the oil surface increase the charge of sparking to the tank wall. Metal gauge rods or other objects projecting into the vapor space can create a spark gap as the rising liquid level approaches the projection. A common precaution is to require that fill pipes (downspouts) reach as close to the bottom of the tank as practicable. Any operation such

as sampling, taking oil temperature, or gauging that involves lowering a conductive object through an opening into the vapor space on the oil should be deferred until at least 1 minute after flow has ceased. This will permit any surface charge to relax.

(2) Reduce the static generation by one or more of the following:
   (a) Avoid splash filling and upward spraying of oil where bottom filling is used.
   (b) Employ reduced fill rates at the start of filling through downspouts, until the end of the spout is submerged. Some consider 3 ft/sec (0.9 m/sec) to be a suitable precaution.
   (c) Where filters are employed, provide relaxation time in the piping downstream from the filters. A relaxation time of 30 seconds is considered by some to be a suitable precaution.

(3) Eliminate the flammable mixture before switch loadings by gas freeing or inerting.

See NFPA 77 and NFPA 385 for further information. [**30:** A.7.6.12]

A.66.5.6.3 See NFPA 51B. [**30:** A.7.9.3]

A.66.5.6.4 The prevention of electrostatic ignition in equipment is a complex subject. Refer to NFPA 77 for guidance. [**30:** A.7.9.4]

A.66.5.9.1.1 Other recognized fire prevention and control factors, involving construction, location, and separation, are addressed elsewhere in Chapter 7 of NFPA 30. [**30:** A.7.13.1.1]

A.66.5.9.1.2 The wide range in size, design, and location of liquid-processing facilities precludes the inclusion of detailed fire prevention and control systems and methods applicable to all such facilities. [**30:** A.7.13.1.2]

A.66.5.9.2.1 NFPA 10 provides information on the suitability of various types of extinguishers. [**30:** A.7.13.2.1]

A.66.5.9.3.2 Permanent connections to process water lines from the fire water system present an opportunity for contamination of the fire water with process fluids. Incidents have occurred where fire water was contaminated with flammable process liquids, with subsequent increased fire damage and, in some cases, injury. Temporary connections are permitted to meet extraordinary needs, as in turnaround and inspection periods, tank cleaning, etc. However, care should be taken to address the potential for contamination. Where such use occurs frequently enough to justify a more robust arrangement, double block-and-bleed valves, removable spool pieces, or other means should be used to assure that no contamination can occur. Check valves alone are not sufficient.

Use of utility water sources, such as boiler feedwater, which are not contaminated, is acceptable for use as a supplemental fire water supply. [**30:** A.7.13.3.2]

A.66.5.9.3.3 See NFPA 24 for information on this subject. [**30:** A.7.13.3.3]

A.66.5.9.3.4 See NFPA 13 and NFPA 15 for information on these subjects. [**30:** A.7.13.3.4]

A.66.5.9.4.1 One method of complying with this requirement could be through the installation of an automatic and/or manual fire alarm system as covered in *NFPA 72*. [**30:** A.7.13.4.1]

A.66.6.2.2 For additional information, see NFPA 497. [**30:** A.8.2.2]

A.66.6.2.4 NFPA 496 provides details for these types of installations. [**30:** A.8.2.4]

A.66.7 The AHJ should review NFPA 329 for guidance.

A.69.1.1 See A.1.3.2.

A.69.2.1.1.1 Prior to April 1, 1967, regulations of the U.S. Department of Transportation were promulgated by the Interstate Commerce Commission. In Canada, the regulations of the Canadian Transport Commission apply and are available from the Canadian Transport Commission, Union Station, Ottawa, Canada.

Construction of containers to the API-ASME *Code for Unfired Pressure Vessels for Petroleum Liquids and Gases*, has not been authorized after July 1, 1961. [**58:** A.5.2.1.1]

A.69.2.1.4.2 The tare weight is the cylinder weight plus the weight of all permanently attached valves and other fittings but does not include the weight of protecting devices that are removed in order to load the cylinder. [**58:** A.5.2.8.2]

A.69.2.1.4.3 Head design refers to the shape of the head. Shapes include hemispherical, semi-ellipsoidal, and others. *(Refer to the API-ASME Code for Unfired Pressure Vessels for Petroleum Liquids and Gases for more information.)* [**58:** A.5.2.8.3]

A.69.3.1 Section 6.4 of NFPA 58 includes general provisions that are applicable to most stationary systems. Section 6.5 through Section 6.11 of NFPA 58 extend and modify Section 6.4 of NFPA 58 for systems installed for specific purposes. [**58:** A.6.1.1]

A.69.3.4.5.3 For information on determination of flash points see NFPA 30. [**58:** A.6.4.5.3]

A.69.3.4.5.8 Also see NFPA 50 and NFPA 51 for oxygen systems, and NFPA 50A for gaseous hydrogen systems. [**58:** A.6.4.5.8]

A.69.3.4.6 Because of the anticipated flash of nonrefrigerated LP-Gas when it is released to the atmosphere, dikes normally serve no useful purpose for nonrefrigerated installations. [**58:** A.6.4.6]

A.69.3.4.7 The presence of such structures can create significant hazards, such as the following:

(1) Pocketing of escaping gas
(2) Interference with application of cooling water by fire departments
(3) Redirection of flames against containers
(4) Impeding the egress of personnel in an emergency [**58:** A.6.4.7]

A.69.3.5.1 It is the intent to allow transfer of liquid into containers in open areas under canopies or roofs where 50 percent or more of the perimeter is not enclosed. [**58:** A.6.5.1]

A.69.3.6.1.4 Generally, a light reflecting color paint is preferred unless the system is installed in an extremely cold climate. [**58:** A.6.6.1.4]

A.69.3.8.8 Anchorage can be accomplished by use of concrete bulkheads or equivalent anchorage or by the use of a weakness or shear fitting. [**58:** A.6.10.8]

A.69.3.10.2.7 The requirement for a pilot or an electronic ignition system became effective for heaters with inputs over

50,000 Btu/hr manufactured on or after May 17, 1967. [**58:** A.6.17.2.7]

A.69.3.10.8.3 The weight will be affected by the specific gravity of the LP-Gas. Weights varying from 16.0 oz (454 g) to 16.8 oz (476 g) are recognized as being within the range of what is nominal. [**58:** A.6.17.9.3]

A.69.3.12.1 Typical nonengine fuel systems include those on commercial, industrial, construction, and public service vehicles such as trucks, semitrailers, trailers, portable tar kettles, road surface heating equipment, mobile laboratories, clinics, and mobile cooking units (such as catering and canteen vehicles). [**58:** A.6.21.1]

A.69.3.12.7.6 Requirements for the design of containers are located in Section 5.2 of NFPA 58. Requirements for container appurtenances are located in Section 5.3 of NFPA 58. [**58:** A.6.21.7.6]

A.69.4.1 Ignition source control at transfer locations is covered in Section 6.20 of NFPA 58. Fire protection is covered in Section 6.23 of NFPA 58. [**58:** A.7.1]

A.69.5.4.1 The filling process in 69.5.4.1.3 refers to the time period beginning when a cylinder or cylinders are brought to a dispensing station to be filled and ending when the last cylinder is filled and all the cylinders are removed from the filling area. This is meant to define a continuous process with the cylinders being unattended for only brief periods, such as operator breaks or lunch. [**58:**8.4.1]

A.69.5.4.2.2 There are numerous effective means to provide protection against accidental vehicle impact or damage. The method selected depends upon local conditions with regard to the kinds of traffic that can be reasonably expected and the environment surrounding the location. While additional protection over and above that used to protect the building might not be needed at some locations, others might need additional protection. Examples of such additional protection could be the following:

(1) Guard rails
(2) Steel bollards
(3) Raised sidewalks [**58:** A.8.4.2.2]

A.69.5.5 See 6.23.4.3 of NFPA 58. [**58:** A.8.5]

A.70.1.1 See Annex B for the classification of hazard categories and hazard evaluations of oxidizers and organic peroxide formulations.

A.70.2.1.1 See A.1.3.2.

A.70.2.2 Examples of other oxidizing gases include bromine, chlorine, and fluorine.

The classification of oxidizers is based on the evaluation by the Technical Committee on Hazardous Chemicals of available scientific and technical data, actual experience, and its considered opinion. Classification refers to the pure oxidizer. Gross contamination can cause oxidizers of all classes to undergo exothermic or explosive reaction, particularly if they also are subjected to confinement and heating. *(See definition 3.3.173, Oxidizer. See B.2.2 through B.2.5 for oxidizer classifications.)* [**430:** A.3.3.7]

A.70.2.3(1) Sills, curbs, or intervening storage of nonhazardous compatible materials and aisles should be used as aids in maintaining separation. [**430:** A.3.3.10.5]

A.70.2.4.2.1 The classification system for oxidizer hazard *(see 3.3.173 of NFPA 430)* should be used only to determine the storage requirements established by NFPA 430. It is not meant to be a substitute for the hazard identification system established by NFPA 704. Since the hazard characteristics of oxidizers vary widely depending on the type of oxidizer and its relative concentration, each oxidizer should be rated individually according to the criteria established in NFPA 704.

NFPA 704 is designed to apprise fire fighters or emergency personnel of the inherent hazards related to the manufacture, storage, or use of hazardous materials. It is concerned with the health, fire, reactivity, and other related hazards created by short-term exposure that might be encountered under fire or related emergency conditions.

The hazard rating classifications for oxidizers do not correlate to the reactivity classification in NFPA 704. [**430:** A.4.2.1]

A.70.2.4.3.2 Automatic sprinklers are an effective method to control fires involving oxidizers in conjunction with the other fire prevention requirements in the document. [**430:** A.4.4.2]

A.70.2.4.3.3 Care should be exercised because some oxidizers are mutually incompatible. Chlorinated isocyanurates and hypochlorites are examples of oxidizers that are incompatible. The NFPA *Fire Protection Guide to Hazardous Materials* lists many oxidizers and other materials that result in hazardous interactions. [**430:** A.4.4.3]

A.70.2.4.3.5 This requirement to restrict exposure to water is not intended to apply to the application of fire protection water. [**430:** A.4.4.5]

A.70.2.4.8.1 Conditions that affect the need for hydrant protection include nearness of the exposures, size and construction of the building, amount and class of the oxidizer stored, and availability of public fire protection. [**430:** A.4.11.1]

A.70.2.4.8.3 Dry-pipe and double-interlock preaction (DIPA) sprinkler systems are generally prohibited by 70.2.4.8.3 for use with oxidizers. In mercantile occupancies with open air environments that are already protected by these types of systems as prescribed by other codes, it is considered acceptable to store quantities defined by NFPA 430, with the recognition that these commodities might not be adequately protected. Outside storage in this manner is preferred to inside storage. [**430:** A.4.11.3]

A.70.2.4.8.4.1 A dry chemical fire-extinguishing agent containing ammonium compounds (such as some A:B:C agents) should not be used on oxidizers that contain chlorine. The reaction between the oxidizer and the ammonium salts in the fire-extinguishing agent can produce an explosive compound (NCl_3). Carbon dioxide or other extinguishing agents that function by a smothering action for effective use are of no value in extinguishing fires involving oxidizers. [**430:** A.4.11.6.1]

A.70.2.4.8.4.2 Halon extinguishers should not be used on fires involving oxidizers since they can react with the oxidizer. [**430:** A.4.11.6.2]

A.70.2.4.8.4.3 Halocarbon clean agent extinguishers as identified in NFPA 2001 are chemically similar to Halon and unless proven differently should be assumed to react with the oxidizer. [**430:** A.4.11.6.3]

A.70.2.4.9.2 Spill control, drainage, and containment are typically required under environmental regulations. Check

the building code to determine whether it contains spill control requirements. [430: A.4.13.2]

A.70.2.4.9.5 Where absorptive combustible packing materials used to contain water-soluble oxidizers have become wet during either fire or nonfire conditions, the oxidizer can impregnate the packing material. This creates a serious fire hazard when the packing material dries. Wooden pallets that are exposed to water solutions of an oxidizer also can exhibit this behavior. [430: A.4.13.5]

A.70.2.5.2 The NFPA *Fire Protection Guide to Hazardous Materials* should be used for guidance on compatibility. [430: A.1.1.1.3]

A.70.2.6.2 The NFPA *Fire Protection Guide to Hazardous Materials* should be used for guidance on compatibility. [430: A.1.1.1.3]

A.70.2.6.3.4 Only the building limit, not the pile limit, height, or width, can be increased by this provision. [430: A.6.2.4]

A.70.2.7.2 The NFPA *Fire Protection Guide to Hazardous Materials* should be used for guidance on compatibility. [430: A.1.1.1.3]

A.70.2.8.2 The NFPA *Fire Protection Guide to Hazardous Materials* should be used for guidance on compatibility. [430: A.1.1.1.3]

A.70.2.8.4.2 For example, two tanks contain 4000 lb (1814 kg) and 3000 lb (1360 kg) of Class 4 oxidizer and they are separated by 25 ft (7.6 m). Because they are separated by less than 10 percent of 300 ft (92 m), the total quantity of 7000 lb (3175 kg) requires a minimum separation of 400 ft (122 m) to the nearest important structure in accordance with 70.2.8.4. [430: A.8.3.5]

A.70.2.9.2.1 Recommended mercantile store arrangements for mutually incompatible oxidizers are shown in Figure A.70.2.9.2.1(a) and Figure A.70.2.9.2.1(b). These two diagrams illustrate arrangements that minimize the chance of exposure to incompatible materials. Wherever possible, vertical separation should be maintained between incompatible materials. [430: A.9.2.1]

A.70.3.1.1 See A.1.3.2.

A.70.3.2 Test procedures described in *United Nations Recommendation on Transportation of Dangerous Goods, Tests and Criteria* are useful in determining the classification of organic peroxide formulations.

The system is based on the behavior of certain specific formulations in their U.S. Department of Transportation- or Canadian Ministry of Transport-approved shipping containers and under conditions of fire exposure. *(See Annex B for classification of typical organic peroxide formulations.)* [432: A.4.12]

A.70.3.4.1.1 The classification system described in 70.3.2 is used only to determine the storage requirements established by NFPA 432. It is not meant to be a substitute for the hazard identification system established by NFPA 704. Since the hazard characteristics of organic peroxide formulations vary widely depending on the type of organic peroxide, the diluent, and their relative concentrations, each specific formulation will have to be rated individually according to the criteria established in NFPA 704. [432: A.4.1.1]

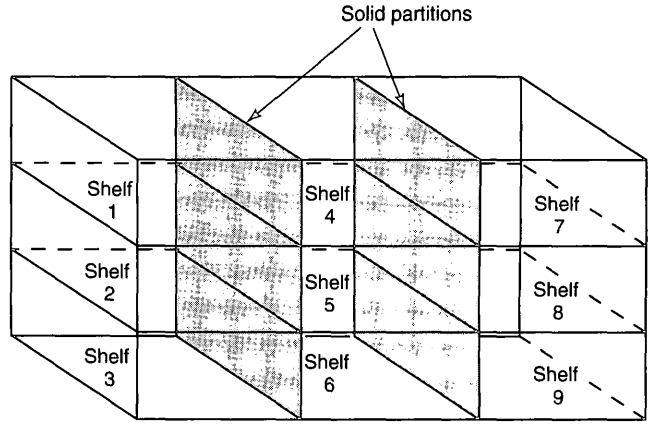

Shelf 1: Oxidizer A	Shelf 4: Oxidizer B	Shelf 7: Oxidizer C
Shelf 2: Oxidizer A	Shelf 5: Oxidizer B	Shelf 8: Oxidizer C
Shelf 3: Oxidizer A	Shelf 6: Oxidizer B	Shelf 9: Oxidizer C

Oxidizers A, B, and C are mutually incompatible.

FIGURE A.70.2.9.2.1(a) Recommended Mercantile Store Arrangement for Mutually Incompatible Oxidizers. [430:Figure A.9.2.1(a)]

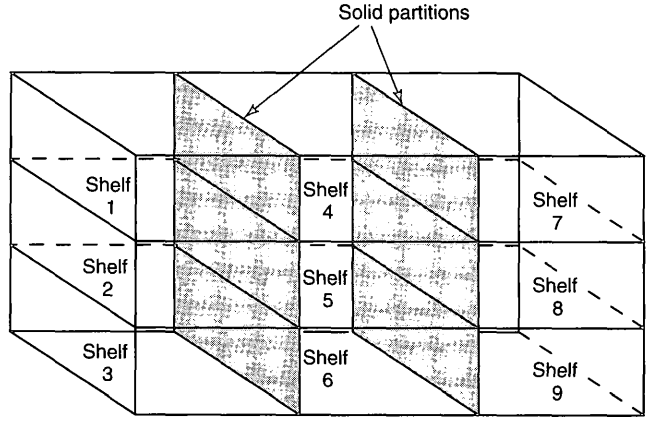

Shelf 1: Oxidizer A	Shelf 4: Oxidizer C	Shelf 7: Oxidizer D
Shelf 2: Inert	Shelf 5: Inert	Shelf 8: Inert
Shelf 3: Oxidizer B	Shelf 6: Incompatible liquid	Shelf 9: Incompatible liquid

Oxidizers A, B, C, and D are mutually incompatible with each other and with the incompatible liquids.

FIGURE A.70.2.9.2.1(b) Recommended Mercantile Store Arrangement for Mutually Incompatible Oxidizers and Other Incompatible Materials. [430:Figure A.9.2.1(b)]

A.70.3.4.4.2 Considerations should be given for maintaining proper refrigeration capability in the event of a loss of power. Some materials when frozen could cause separation of a carrier from the organic peroxide. [432: A.4.4.2]

A.70.3.4.6.1 Manual fire-fighting equipment can consist of small hose equipped with adjustable spray nozzles or portable fire extinguishers suitable for Class A and for Class B:C fires, or

both. Manual fire fighting in storage areas should be undertaken only by those having a clear understanding of the storage conditions and the characteristics of fires involving organic peroxides. [**432:** A.4.8.1]

A.70.3.4.6.2 The use of high-expansion foam or liquid nitrogen flooding can be substituted for automatic sprinkler protection if installed subject to the approval of the AHJ. For Class I organic peroxide formulations, see 7.5.2 of NFPA 432. [**432:** A.4.8.2]

A.70.3.4.7.2 The method of disposal can vary depending on the specific formulation and materials with which they might have been contaminated. Refer to the manufacturer or the supplier of the specific formulation for advice. [**432:** A.4.9.2]

A.70.3.4.8.1.3 In the venting equation, use the fuel characteristic constant for "gases with fundamental burning velocity less than 1.3 times that of propane." See NFPA 68 for information on vent design. Refer to manufacturers' technical data for information on organic peroxide formulations that give off flammable gases upon decomposition. [**432:** A.6.3.4]

A.70.3.4.8.2 For example, a sprinklered building, detached by 50 ft (15.3 m), can contain up to 500 lb (227 kg) of Class I, 50,000 lb (22,700 kg) of Class II, and 50,000 lb (22,700 kg) of Class III formulations, according to the following ratios:

(1) Class I:

$$\frac{500\text{ lb}}{2000\text{ lb (max)}} \times 100 = 25\% \quad \frac{227\text{ kg}}{907\text{ kg (max)}} \times 100 = 25\%$$

(2) Class II:

$$\frac{50{,}000\text{ lb}}{100{,}000\text{ lb (max)}} \times 100 = 50\% \quad \frac{22{,}700\text{ kg}}{45{,}400\text{ kg (max)}} \times 100 = 50\%$$

(3) Class III:

$$\frac{50{,}000\text{ lb}}{200{,}000\text{ lb (max)}} \times 100 = 25\% \quad \frac{22{,}700\text{ kg}}{90{,}700\text{ kg (max)}} \times 100 = 25\%$$

In no case does the quantity in storage exceed the maximum for its class, nor does the sum of the percentages exceed 100 percent. [**432:** A.4.10.2]

A.70.3.4.9.6 Since no commercially available Class I organic peroxide formulations are supplied in 55 gal (208 L) drums, there is no requirement for such storage. [**432:** A.4.11.6]

A.70.3.5.4.3 For information on combustible or limited-combustible construction, see NFPA 220. [**432:** A.5.4.3]

A.70.3.6.2 For information on combustible or limited-combustible construction, see NFPA 220. [**432:** A.6.4]

A.70.3.7.2.1 For the purpose of NFPA 432, an important building is one that is occupied or that contains facilities vital to the operation of the plant. [**432:** A.7.3.1]

Annex B Oxidizers and Organic Peroxides

This annex is not a part of the requirements of this NFPA document but is included for informational purposes only.

B.1 General. This annex provides information, explanations, and examples to illustrate and clarify the hazard categories contained in Chapter 70 of this *Code*. The hazard categories are based on 29 CFR. Where numerical classifications are included, they are in accordance with nationally recognized standards.

B.2 Oxidizers.

B.2.1 General. The oxidizers on the following lists are typical for their class. Each oxidizer is undiluted unless a concentration is specified.

Unless concentration is specified, undiluted material is referenced. The following lists of oxidizers are provided to clarify how the NFPA Hazardous Chemicals Committee has classified typical oxidizers. The lists are not all-inclusive and are amended to reflect typical oxidizers used.

B.2.2 Class 1 Oxidizers. The following are typical Class 1 oxidizers:

(1) All inorganic nitrates (unless otherwise classified)
(2) All inorganic nitrites (unless otherwise classified)
(3) Ammonium persulfate
(4) Barium peroxide
(5) Calcium peroxide
(6) Hydrogen peroxide solutions (greater than 8 percent up to 27.5 percent)
(7) Lead dioxide
(8) Lithium hypochlorite (39 percent or less available chlorine)
(9) Lithium peroxide
(10) Magnesium peroxide
(11) Manganese dioxide
(12) Nitric acid (40 percent concentration or less)
(13) Perchloric acid solutions (less than 50 percent by weight)
(14) Potassium dichromate
(15) Potassium percarbonate
(16) Potassium persulfate
(17) Sodium carbonate peroxide
(18) Sodium dichloro-s-triazinetrione dihydrate (sodium dicholorisocyanurate dihydrate)
(19) Sodium dichromate
(20) Sodium perborate (anhydrous)
(21) Sodium perborate monohydrate
(22) Sodium perborate tetrahydrate
(23) Sodium percarbonate
(24) Sodium persulfate
(25) Strontium peroxide
(26) Trichloro-s-triazinetrione [trichloroisocyanuric acid (TCCA; trichlor), all physical forms]
(27) Zinc peroxide [**430:** B.2]

B.2.3 Class 2 Oxidizers. The following are typical Class 2 oxidizers:

(1) Barium bromate
(2) Barium chlorate
(3) Barium hypochlorite
(4) Barium perchlorate
(5) Barium permanganate
(6) 1-Bromo-3-chloro-5,5-dimethylhydantoin (BCDMH)
(7) Calcium chlorate
(8) Calcium chlorite
(9) Calcium hypochlorite (50 percent or less by weight)
(10) Calcium perchlorate
(11) Calcium permanganate
(12) Chromium trioxide (chromic acid)
(13) Copper chlorate
(14) Halane (1,3-dichloro-5,5-dimethylhydantoin)

(15) Hydrogen peroxide (greater than 27.5 percent up to 52 percent)
(16) Lead perchlorate
(17) Lithium chlorate
(18) Lithium hypochlorite (more than 39 percent available chlorine)
(19) Lithium perchlorate
(20) Magnesium bromate
(21) Magnesium chlorate
(22) Magnesium perchlorate
(23) Mercurous chlorate
(24) Nitric acid (more than 40 percent but less than 86 percent)
(25) Nitrogen tetroxide
(26) Perchloric acid solutions (more than 50 percent but less than 60 percent)
(27) Potassium perchlorate
(28) Potassium permanganate
(29) Potassium peroxide
(30) Potassium superoxide
(31) Silver peroxide
(32) Sodium chlorite (40 percent or less by weight)
(33) Sodium perchlorate
(34) Sodium perchlorate monohydrate
(35) Sodium permanganate
(36) Sodium peroxide
(37) Strontium chlorate
(38) Strontium perchlorate
(39) Thallium chlorate
(40) Urea hydrogen peroxide
(41) Zinc bromate
(42) Zinc chlorate
(43) Zinc permanganate [**430**: B.3]

B.2.4 Class 3 Oxidizers. The following are typical Class 3 oxidizers:

(1) Ammonium dichromate
(2) Calcium hypochlorite (over 50 percent by weight)
(3) Chloric acid (10 percent maximum concentration)
(4) Hydrogen peroxide solutions (greater than 52 percent up to 91 percent)
(5) Mono-(trichloro)-tetra-(monopotassium dichloro)-penta-s-triazinetrione
(6) Nitric acid, fuming (more than 86 percent concentration)
(7) Perchloric acid solutions (60 percent to 72 percent by weight)
(8) Potassium bromate
(9) Potassium chlorate
(10) Potassium dichloro-s-triazinetrione (potassium dichloroisocyanurate)
(11) Sodium bromate
(12) Sodium chlorate
(13) Sodium chlorite (over 40 percent by weight)
(14) Sodium dichloro-s-triazinetrione anhydrous (sodium dichloroisocyanurate anhydrous) [**430**: B.4]

B.2.5 Class 4 Oxidizers. The following are typical Class 4 oxidizers:

(1) Ammonium perchlorate (particle size greater than 15 microns)
(2) Ammonium permanganate
(3) Guanidine nitrate
(4) Hydrogen peroxide solutions (greater than 91 percent)
(5) Tetranitromethane

Ammonium perchlorate less than 15 microns is classified as an explosive and, as such, is not covered by NFPA 430. *(See NFPA 495.)* [**430**: B.5]

B.3 Organic Peroxide Formulations.

B.3.1 General.

B.3.1.1 The assignment of the organic peroxide formulation classifications shown in the tables in this annex are based on the container sizes shown. A change in the container size could affect the classification.

B.3.1.2 For alphabetical listing of typical organic peroxide formulations, see Table B.3.1.2.

Table B.3.1.2 Typical Organic Peroxide Formulations

			Recommended Maximum Temperatures[1]				Hazard Identification[2]				
			Control		Emergency						
Organic Peroxide	Concentration	Diluent	°F	°C	°F	°C	Health	Flammability	Reactivity	Class	Container
t-Amyl hydroperoxide	88	Water					3	3	2	III	55 gal (208 L)
t-Amyl peroxyacetate	60	OMS					2	3	2	III	5 gal (19 L)
t-Amyl peroxybenzoate	96	—					2	3	2	II	5 gal (19 L)
t-Amyl peroxy-2-ethylhexanoate	96	—	68	20	77	25	0	3	2	III	55 gal (208 L)
t-Amyl peroxyneodecanoate	75	OMS	32	0	50	10	1	3	2	III	5 gal (19 L)
t-Amyl peroxypivalate	75	OMS	50	10	59	15	1	3	2	III	5 gal (19 L)
t-Butyl cumyl peroxide	95	—					2	2	2	IV	55 gal (208 L)
n-Butyl-4,4-di(*t*-butyl peroxy) valerate	98	—					2	3	2	II	5 gal (19 L)
t-Butyl hydroperoxide	90	Water & *t*-BuOH					3	3	3	I	5 gal (19 L)
t-Butyl hydroperoxide[3]	70	DTBP & *t*-BuOH					3	3	3	II	55 gal (208 L)
t-Butyl hydroperoxide[3]	70	Water					3	2	2	IV	55 gal (208 L)
t-Butyl monoperoxymaleate	98	—					2	3	3	I	50 @ 1 lb (50 @ 0.5 kg)

(continues)

Table B.3.1.2 *Continued*

Organic Peroxide	Concentration	Diluent	Recommended Maximum Temperatures[1] Control °F	Control °C	Emergency °F	Emergency °C	Hazard Identification[2] Health	Flammability	Reactivity	Class	Container
t-Butyl peroxyacetate	75	OMS					1	3	3	I	5 gal (19 L)
t-Butyl peroxyacetate	60	OMS					1	3	3	I	5 gal (19 L)
t-Butyl peroxybenzoate	98	—					1	3	3	II	5 gal (19 L)
t-Butyl peroxy-2-ethylhexanoate	97	—	68	20	77	25	1	3	3	III	5 gal (19 L)
t-Butyl peroxy-2-ethylhexanoate	97	—	68	20	77	25	1	3	3	II	55 gal (208 L)
t-Butyl peroxy-2-ethylhexanoate	50	DOP or OMS	86	30	95	35	1	2	2	IV	5 gal (19 L)
t-Butyl peroxy-2-ethylhexanoate	50	DOP or OMS	86	30	95	35	1	2	2	III	55 gal (208 L)
t-Butylperoxy 2-ethylhexyl carbonate	95	—					1	3	2	III	5 gal (19 L)
t-Butyl peroxyisobutyrate	75	OMS	59	15	68	20	2	3	3	II	5 gal (19 L)
t-Butylperoxy isopropyl carbonate	92	OMS					1	3	3	I	5 gal (19 L)
t-Butylperoxy isopropyl carbonate	75	OMS					1	3	3	II	5 gal (19 L)
t-Butyl peroxyneodecanoate	75	OMS	32	0	50	10	2	3	2	III	5 gal (19 L)
t-Butyl peroxypivalate	75	OMS	32	0	50	10	2	3	3	II	5 gal (19 L)
t-Butyl peroxypivalate	45	OMS	32	0	50	10	2	2	2	IV	5 gal (19 L)
Cumyl hydroperoxide	88	Cumene					3	2	2	III	55 gal (208 L)
Cumyl peroxyneodecanoate	75	OMS	14	–10	32	0	1	3	2	III	5 gal (19 L)
Cumyl peroxyneoheptanoate	75	OMS	32	0	50	10	2	3	2	III	5 gal (19 L)
Diacetyl peroxide	25	DMP	68	20	77	25	2	3	3	II	5 gal (19 L)
1,1-Di(*t*-amylperoxy) cyclohexane	80	OMS or BBP					2	3	2	III	5 gal (19 L)
Dibenzoyl peroxide	98	—					1	3	4	I	1 lb (0.5 kg)
Dibenzoyl peroxide	78	Water					1	2	3	II	25 lb (11 kg)
Dibenzoyl peroxide	75	Water					1	2	2	III	25 lb (11 kg)
Dibenzoyl peroxide	70	Water					1	2	2	IV	25 lb (11 kg)
Dibenzoyl peroxide (paste)	55	Plasticizer		T			1	2	2	III	350 lb (160 kg)
Dibenzoyl peroxide (paste)	55	Plasticizer & Water		T			1	2	2	IV	350 lb (160 kg)
Dibenzoyl peroxide (paste)	50	Plasticizer		T			1	2	2	III	380 lb (170 kg)
Dibenzoyl peroxide (paste)	50	Plasticizer & Water		T			1	2	2	IV	380 lb (170 kg)
Dibenzoyl peroxide (slurry)	40	Water & Plasticizer		T			1	2	2	IV	380 lb (170 kg)
Dibenzoyl peroxide (slurry)	40	Water					1	2	2	IV	5 gal (19 L)
Dibenzoyl peroxide (powder)	35	Dicalcium phosphate dihydrate or Calcium sulfate dihydrate					1	0	0	V	100 lb (45 kg)
Dibenzoyl peroxide (powder)	35	Starch					1	2	2	IV	100 lb (45 kg)
Di (4-*t*-butylcyclohexyl) peroxydicarbonate	98	—	86	30	95	35	1	3	2	III	88 lb (40 kg)
Di-*t*-butyl peroxide[3]	99	—					1	3	2	III	55 gal (208 L)
2,2-Di(*t*-butylperoxy) butane	50	Toluene					1	3	3	I	1 gal (4 L)
1,1-Di(*t*-butylperoxy) cyclohexane	80	OMS or BBP					1	3	3	II	5 gal (19 L)
Di-*sec*-butyl peroxydicarbonate	98	—	–4	–20	14	–10	1	3	3	II	1 gal (4 L)
Di-*sec*-butyl peroxydicarbonate	75	OMS	–4	–20	14	–10	1	3	3	II	5 gal (19 L)
Di(2-*t*-butylperoxy-isopropyl) benzene	96	—					1	2	2	III	100 lb (45 kg)
Di(2-*t*-butylperoxyisopropyl) benzene	40	Clay					1	1	0	V	100 lb (45 kg)
Di(butylperoxy) phthalate	40	DBP					2	2	2	IV	30 gal (110 L)
1,1-Di(*t*-butylperoxy)-3,3,5-trimethylcyclohexane	75–95	—					2	3	3	II	5 gal (19 L)

Table B.3.1.2 *Continued*

Organic Peroxide	Concentration	Diluent	Recommended Maximum Temperatures[1] Control °F	Control °C	Emergency °F	Emergency °C	Hazard Identification[2] Health	Flammability	Reactivity	Class	Container
1,1-Di(*t*-butylperoxy)-3,3,5-trimethyl-cyclohexane	40	Calcium carbonate					1	1	1	V	100 lb (45 kg)
Dicetyl peroxydicarbonate	85	—	86	30	95	35	1	2	2	IV	44 lb (20 kg)
Dicumyl peroxide	98	—					2	2	2	IV	55 gal (208 L)
Dicumyl peroxide	40	Clay or Calcium carbonate					1	1	1	V	100 lb (45 kg)
Didecanoyl peroxide	98	—	86	30	95	35	1	3	2	III	50 lb (23 kg)
Di-2,4-dichlorobenzoyl peroxide	50	DBP & Silicone		T			1	2	2	III	5 gal (19 L)
Di(2-ethylhexyl) peroxydicarbonate	97	—	–4	–20	14	–10	1	3	3	II	1 gal (4 L)
Di(2-ethylhexyl) peroxydicarbonate	40	OMS	5	–15	23	–5	1	2	2	IV	5 gal (19 L)
Diisopropyl peroxydicarbonate	99	—	5	–15	23	–5	2	3	4	I	10 lb (4.5 kg)
Diisopropyl peroxydicarbonate	30	Toluene	14	–10	32	0	2	3	2	III	5 lb (2.3 kg)
Di-*n*-propyl peroxydicarbonate	98	—	–13	–25	5	–15	2	3	4	I	1 gal (4 L)
Di-*n*-propyl peroxydicarbonate	85	OMS	–13	–25	5	–15	2	3	4	I	1 gal (4 L)
Dilauroyl peroxide	98	—					1	2	2	IV	110 lb (50 kg)
2,5-Dimethyl-2,5-di (benzoylperoxy)hexane	95	—					2	3	3	II	4 @ 5 lb (4 @ 2.3 kg)
2,5-Dimethyl-2,5-di (*t*-butylperoxy)hexane	92	—					2	3	2	III	30 gal (110 L)
2,5-Dimethyl-2,5-di (*t*-butylperoxy)hexane	47	Calcium carbonate or Silica					1	1	1	V	100 lb (45 kg)
2,5-Dimethyl-2,5-di (2-ethylhexanoylperoxy) hexane	90	—	68	20	77	25	0	3	2	III	5 gal (19 L)
2,5-Dimethyl-2,5-dihydro-peroxyhexane	70	Water					2	3	3	II	100 lb (45 kg)
Ethyl-3,3-di(*t*-amylperoxy) butyrate	75	OMS					1	3	2	III	5 gal (19 L)
Ethyl-3,3-di(*t*-butylperoxy) butyrate	75	OMS					2	2	2	III	5 gal (19 L)
Ethyl-3,3-di(*t*-butylperoxy) butyrate	40	Clay or Calcium silicate					1	3	2	V	100 lb (45 kg)
p-Menthyl hydroperoxide	54	Alcohols & Ketones					3	2	2	IV	55 gal (208 L)
Methyl ethyl ketone peroxide	9.0% AO	DMP					3	2	2	III	5 gal (19 L)
Methyl ethyl ketone peroxide	5.5% AO	DMP					3	2	2	IV	5 gal (19 L)
Methyl ethyl ketone peroxide	9.0% AO	Water & Glycols					3	2	2	IV	5 gal (19 L)
Methyl ethyl ketone peroxide and Cyclohexanone peroxide mixture	9.0% AO	DMP					3	2	2	III	5 gal (19 L)
2,4-Pentanedione peroxide	4.0% AO	Water & Solvent					2	1	1	IV	5 gal (19 L)
Peroxyacetic acid, Type E, stabilized	43	Water, HOAc, & H_2O_2					3	2	3	II	30 gal (110 L)

[1]These columns refer to temperatures in the Department of Transportation (DOT) Organic Peroxides Table. Refer to document 49 CFR 173.225 for details.
[2]The column refers to NFPA 704, *Standard System for the Identification of the Hazards of Materials for Emergency Response*, hazard ratings for health, flammability, and reactivity. See NFPA 704 for details.
[3]See NFPA 30, *Flammable and Combustible Liquids Code*, for additional storage requirements.
T — Temperature control should be considered to reduce fire hazard depending on packaging size and recommendations in manufacturers' literature.
Note: Diluents: BBP — Butyl benzyl phthalate; DBP — Dibutyl phthalate; DMP — Dimethyl phthalate; DOP — Dioctyl phthalate; DTBP — Di-tertiary-butyl peroxide; HOAc — Acetic acid; H_2O_2 — Hydrogen peroxide; OMS — Odorless mineral spirits; *t*-BuOH — Tertiary butanol.
[**432**:Table B.1]

Table B.3.2.3 Typical Class I Formulations

			Recommended Maximum Temperatures[1]							
			Control		Emergency		Hazard Identification[2]			
Organic Peroxide	Concentration	Diluent	°F	°C	°F	°C	Health	Flammability	Reactivity	Container
t-Butyl hydroperoxide	90	Water & *t*-BuOH					3	3	3	5 gal (19 L)
t-Butyl monoperoxymaleate	98	—					2	3	3	50 @ 1 lb (50 @ 0.5 kg)
t-Butyl peroxyacetate	75	OMS					1	3	3	5 gal (19 L)
t-Butyl peroxyacetate	60	OMS					1	3	3	5 gal (19 L)
t-Butylperoxy isopropyl carbonate	92	OMS					1	3	3	5 gal (19 L)
Dibenzoyl peroxide	98	—					1	3	4	1 lb (0.5 kg)
2,2-Di(*t*-butylperoxy) butane	50	Toluene					1	3	3	1 gal (4 L)
Diisopropyl peroxydicarbonate	99	—	5	–15	23	–5	2	3	4	10 lb (4.5 kg)
Di-*n*-propyl peroxydicarbonate	98	—	–13	–25	5	–15	2	3	4	1 gal (4 L)
Di-*n*-propyl peroxydicarbonate	85	OMS	–13	–25	5	–15	2	3	4	1 gal (4 L)

[1]These columns refer to temperatures in the Department of Transportation (DOT) Organic Peroxides Table. Refer to document 49 CFR 173.225 for details.

[2]The column refers to NFPA 704, *Standard System for the Identification of the Hazards of Materials for Emergency Response*, hazard ratings for health, flammability, and reactivity. See NFPA 704 for details.

Note: Diluents: OMS — Odorless mineral spirits; *t*-BuOH — Tertiary butanol.

[**432**:Table B.2.3]

B.3.2 Class I Formulations.

B.3.2.1 Fire Hazard Characteristics. Class I formulations present a deflagration hazard through easily initiated, rapid explosive decomposition. Class I includes some formulations that are relatively safe only under closely controlled temperatures. Either excessively high or low temperatures can increase the potential for severe explosive decomposition.

B.3.2.2 Fire-Fighting Information. The immediate area should be evacuated and the fire should be fought from a remote location. Some damage to structures from overpressure can be expected should a deflagration occur.

B.3.2.3 Typical Class I Formulations. See Table B.3.2.3.

B.3.3 Class II Formulations.

B.3.3.1 Fire-Hazard Characteristics. Class II formulations present a severe fire hazard similar to Class I flammable liquids. The decomposition is not as rapid, violent, or complete as that produced by Class I formulations. As with Class I formulations, this class includes some formulations that are relatively safe when under controlled temperatures or when diluted.

B.3.3.2 Fire-Fighting Information. Fires should be fought from a safe distance, since a hazard exists from rupturing containers.

B.3.3.3 Typical Class II Formulations. See Table B.3.3.3.

Table B.3.3.3 Typical Class II Formulations

Organic Peroxide	Concentration	Diluent	Recommended Maximum Temperatures[1] Control °F	Control °C	Emergency °F	Emergency °C	Hazard Identification[2] Health	Flammability	Reactivity	Container
t-Amyl peroxybenzoate	96	—					2	3	2	5 gal (19 L)
n-Butyl-4,4-di(*t*-butylperoxy) valerate	98	—					2	3	2	5 gal (19 L)
t-Butyl hydroperoxide[3]	70	DTBP & *t*-BuOH					3	3	3	55 gal (208 L)
t-Butyl peroxybenzoate	98	—					1	3	3	5 gal (19 L)
t-Butyl peroxy-2-ethylhexanoate	97	—	68	20	77	25	1	3	3	55 gal (208 L)
t-Butyl peroxyisobutyrate	75	OMS	59	15	68	20	2	3	3	5 gal (19 L)
t-Butylperoxy isopropyl carbonate	75	OMS					1	3	3	5 gal (19 L)
t-Butyl peroxypivalate	75	OMS	32	0	50	10	2	3	3	5 gal (19 L)
Diacetyl peroxide	25	DMP	68	20	77	25	2	3	3	5 gal (19 L)
Dibenzoyl peroxide	78	Water					1	2	3	25 lb (11 kg)
1,1-Di(*t*-butylperoxy) cyclohexane	80	OMS or BBP					1	3	3	5 gal (19 L)
Di-*sec*-butyl peroxydicarbonate	98	—	−4	−20	14	−10	1	3	3	1 gal (4 L)
Di-*sec*-butyl peroxydicarbonate	75	OMS	−4	−20	14	−10	1	3	3	5 gal (19 L)
1,1-Di(*t*-butylperoxy)-3,3,5-trimethylcyclohexane	75–95	—					2	3	3	5 gal (19 L)
Di(2-ethylhexyl) peroxydicarbonate	97	—	−4	−20	14	−10	1	3	3	1 gal (4 L)
2,5-Dimethyl-2,5-di(benzoylperoxy) hexane	95	—					2	3	3	4 @ 5 lb (4 @ 2.3 kg)
2,5-Dimethyl-2,5-dihydroperoxy hexane	70	Water					2	3	3	100 lb (45 kg)
Peroxyacetic acid, Type E, stabilized	43	Water, HOAc, & H_2O_2					3	2	3	30 gal (110 L)

[1]These columns refer to temperatures in the Department of Transportation (DOT) Organic Peroxides Table. Refer to document 49 CFR 173.225 for details.

[2]The column refers to NFPA 704, *Standard System for the Identification of the Hazards of Materials for Emergency Response*, hazard ratings for health, flammability, and reactivity. See NFPA 704 for details.

[3]Also a flammable liquid; see NFPA 30, *Flammable and Combustible Liquids Code*, for storage requirements.

Note: Diluents: BBP — Butyl benzyl phthalate; DMP — Dimethyl phthalate; DTBP — Di-tertiary-butyl peroxide; HOAc — Acetic acid; H_2O_2 — Hydrogen peroxide; OMS — Odorless mineral spirits; *t*-BuOH — Tertiary butanol.

[432:Table B.3.3]

B.3.4 Class III Formulations.

B.3.4.1 Fire Hazard Characteristics. Class III formulations present a fire hazard similar to Class II combustible liquids. They are characterized by rapid burning and high heat liberation due to decomposition.

B.3.4.2 Fire-Fighting Information. Caution should be observed due to possible unexpected increases in fire intensity.

B.3.4.3 Typical Class III Formulations. See Table B.3.4.3.

Table B.3.4.3 Typical Class III Formulations

			Recommended Maximum Temperatures[1]				Hazard Identification[2]			
			Control		Emergency					
Organic Peroxide	Concentration	Diluent	°F	°C	°F	°C	Health	Flammability	Reactivity	Container
t-Amyl hydroperoxide	88	Water					3	3	2	55 gal (208 L)
t-Amyl peroxyacetate	60	OMS					2	3	2	5 gal (19 L)
t-Amyl peroxy-2-ethylhexanoate	96	—	68	20	77	25	0	3	2	55 gal (208 L)
t-Amyl peroxyneodecanoate	75	OMS	32	0	50	10	1	3	2	5 gal (19 L)
t-Amyl peroxypivalate	75	OMS	50	10	59	15	1	3	2	5 gal (19 L)
t-Butyl peroxy-2-ethylhexanoate	97	—	68	20	77	25	1	3	3	5 gal (19 L)
t-Butyl peroxy-2-ethylhexanoate	50	DOP or OMS	86	30	95	35	1	2	2	55 gal (208 L)
t-Butyl peroxy-2-ethylhexyl carbonate	95	—					1	3	2	5 gal (19 L)
t-Butyl peroxyneodecanoate	75	OMS	32	0	50	10	2	3	2	5 gal (19 L)
Cumyl hydroperoxide	88	Cumene					3	2	2	55 gal (208 L)
Cumyl peroxyneodecanoate	75	OMS	14	–10	32	0	1	3	2	5 gal (19 L)
Cumyl peroxyneoheptanoate	75	OMS	32	0	50	10	2	3	2	5 gal (19 L)
1,1-Di(*t*-amylperoxy) cyclohexane	80	OMS or BBP					2	3	2	5 gal (19 L)
Dibenzoyl peroxide	75	Water					1	2	2	25 lb (11 kg)
Dibenzoyl peroxide (paste)	55	Plasticizer		T			1	2	2	350 lb (160 kg)
Dibenzoyl peroxide (paste)	50	Plasticizer		T			1	2	2	380 lb (170 kg)
Di(4-*t*-butylcyclohexyl) peroxydicarbonate	98	—	86	30	95	35	1	3	2	88 lb (40 kg)
Di-*t*-butyl peroxide[3]	99	—					1	3	2	55 gal (208 L)
Di(2-*t*-butylperoxy-isopropyl) benzene	96	—					1	2	2	100 lb (45 kg)
Didecanoyl peroxide	98	—	86	30	95	35	1	3	2	50 lb (23 kg)
Di-2,4-dichlorobenzoyl peroxide	50	DBP & Silicone		T			1	2	2	5 gal (19 L)
Diisopropyl peroxydicarbonate	30	Toluene	14	–10	32	0	2	3	2	5 lb (2.3 kg)
2,5-Dimethyl-2,5-di (*t*-butylperoxy) hexane	92	—					2	3	2	30 gal (110 L)
2,5-Dimethyl-2,5-di-(2-ethyl hexanoylperoxy) hexane	90	—		20		25	0	3	2	5 gal (19 L)
Ethyl-3,3-di (*t*-amylperoxy) butyrate	75	OMS					1	3	2	5 gal (19 L)

Table B.3.4.3 *Continued*

Organic Peroxide	Concentration	Diluent	Recommended Maximum Temperatures[1] Control °F	Control °C	Emergency °F	Emergency °C	Hazard Identification[2] Health	Flammability	Reactivity	Container
Ethyl-3,3-di (*t*-butylperoxy) butyrate	75	OMS					2	2	2	5 gal (19 L)
Methyl ethyl ketone peroxide	9.0% AO	DMP					3	2	2	5 gal (19 L)
Methyl ethyl ketone peroxide and Cyclohexanone peroxide mixture	9.0% AO	DMP					3	2	2	5 gal (19 L)

[1]These columns refer to temperatures in the Department of Transportation (DOT) Organic Peroxides Table. Refer to document 49 CFR 173.225 for details.

[2]The column refers to NFPA 704, *Standard System for the Identification of the Hazards of Materials for Emergency Response*, hazard ratings for health, flammability, and reactivity. See NFPA 704 for details.

[3]Also a flammable liquid; see NFPA 30, *Flammable and Combustible Liquids Code*, for storage requirements.

T — Temperature control should be considered to reduce fire hazard depending on packaging size and recommendations in manufacturers' literature.

Note: Diluents: BBP — Butyl benzyl phthalate; DBP — Dibutyl phthalate; DMP — Dimethyl phthalate; DOP — Dioctyl phthalate; OMS — Odorless mineral spirits; AO — Active oxygen.

[432:Table B.4.3]

B.3.5 Class IV Formulations.

B.3.5.1 Fire Hazard Characteristics. Class IV formulations present fire hazards that are easily controlled. Reactivity has little effect on fire intensity.

B.3.5.2 Fire-Fighting Information. Normal fire-fighting procedures can be used.

B.3.5.3 Typical Class IV Formulations. See Table B.3.5.3.

B.3.6 Class V Formulations.

B.3.6.1 Fire Hazard Characteristics. Class V formulations do not present severe fire hazards. Those that do burn do so with less intensity than ordinary combustibles.

B.3.6.2 Fire-Fighting Information. Fire-fighting procedures need primarily consider the combustibility of containers.

B.3.6.3 Typical Class V Formulations. See Table B.3.6.3.

Table B.3.5.3 Typical Class IV Formulations

Organic Peroxide	Concentration	Diluent	Recommended Maximum Temperatures[1] Control °F	Control °C	Emergency °F	Emergency °C	Hazard Identification[2] Health	Flammability	Reactivity	Container
t-Butyl cumyl peroxide	95	—					2	2	2	55 gal (208 L)
t-Butyl hydroperoxide	70	Water					3	2	2	55 gal (208 L)
t-Butyl peroxy-2-ethylhexanoate	50	DOP or OMS	86	30	95	35	1	2	2	5 gal (19 L)
t-Butyl peroxypivalate	45	OMS	32	0	50	10	2	2	2	5 gal (19 L)
Dibenzoyl peroxide	70	Water					1	2	2	25 lb (11 kg)
Dibenzoyl peroxide (paste)	55	Plasticizer & Water		T			1	2	2	350 lb (160 kg)
Dibenzoyl peroxide (paste)	50	Plasticizer & Water		T			1	2	2	380 lb (170 kg)
Dibenzoyl peroxide (slurry)	40	Water & Plasticizer		T			1	2	2	380 lb (170 kg)
Dibenzoyl peroxide (slurry)	40	Water					1	2	2	5 gal (19 L)
Dibenzoyl peroxide (powder)	35	Starch					1	2	2	100 lb (45 kg)
Di(*t*-butylperoxy) phthalate	40	DBP					2	2	2	30 gal (110 L)
Dicetyl peroxydicarbonate	85	—	86	30	95	35	1	2	2	44 lb (20 kg)
Dicumyl peroxide	98	—					2	2	2	55 gal (208 L)
Di(2-ethylhexyl) peroxydicarbonate	40	OMS	5	–15	23	–5	1	2	2	5 gal (19 L)
Dilauroyl peroxide	98	—					1	2	2	110 lb (50 kg)
p-Menthyl hydroperoxide	54	Alcohols & Ketones		T			3	2	2	55 gal (208 L)
Methyl ethyl ketone peroxide	5.5% AO	DMP					3	2	2	5 gal (19 L)
Methyl ethyl ketone peroxide	9.0% AO	Water & Glycols					3	2	2	5 gal (19 L)
2,4-Pentanedione peroxide	4.0% AO	Water & Solvent					2	1	1	5 gal (19 L)

[1]These columns refer to temperatures in the Department of Transportation (DOT) Organic Peroxides Table. Refer to document 49 CFR 173.225 for details.

[2]The column refers to NFPA 704, *Standard System for the Identification of the Hazards of Materials for Emergency Response*, hazard ratings for health, flammability, and reactivity. See NFPA 704 for details.

T — Temperature control should be considered to reduce fire hazard depending on packaging size and recommendations in manufacturers' literature.

Note: Diluents: DBP — Dibutyl phthalate; DMP — Dimethyl phthalate; DOP — Dioctyl phthalate; OMS — Odorless mineral spirits; AO — Active oxygen.

[**432**:Table B.5.3]

Table B.3.6.3 Typical Class V Formulations

Organic Peroxide	Concentration	Diluent	Recommended Maximum Temperatures[1] Control °F	Control °C	Emergency °F	Emergency °C	Hazard Identification[2] Health	Flammability	Reactivity	Container
Dibenzoyl peroxide (powder)	35	Dicalcium phosphate dihydrate or Calcium sulfate dihydrate					1	0	0	100 lb (45 kg)
Di(2-*t*-butylperoxy-isopropyl) benzene	40	Clay					1	1	0	100 lb (45 kg)
1,1-Di(*t*-butylperoxy)-3,3,5-trimethyl-cyclohexane	40	Calcium carbonate					1	1	1	100 lb (45 kg)
Dicumyl peroxide	40	Clay or Calcium carbonate					1	1	1	100 lb (45 kg)
2,5-Dimethyl-2,5-di(*t*-butylperoxy) hexane	47	Calcium carbonate or Silica					1	1	1	100 lb (45 kg)
Ethyl-3,3-di(*t*-butylperoxy) butyrate	40	Clay or Calcium silicate					1	3	2	100 lb (45 kg)

[1]These columns refer to temperatures in the Department of Transportation (DOT) Organic Peroxides Table. Refer to document 49 CFR 173.225 for details.
[2]The column refers to NFPA 704, *Standard System for the Identification of the Hazards of Materials for Emergency Response*, hazard ratings for health, flammability, and reactivity. See NFPA 704 for details.
AO — Active oxygen.
[**432**:Table B.6.3]

Annex C Sample Ordinance Adopting the NFPA 1, *Uniform Fire Code*™

This annex is not a part of the requirements of this NFPA document but is included for informational purposes only.

C.1 The following sample ordinance is provided to assist a jurisdiction in the adoption of this *Code* and is not part of this *Code*.

ORDINANCE NO. _____

An ordinance of the *[jurisdiction]* adopting the *[year]* edition of NFPA 1, *Uniform Fire Code*™, 2006 edition; documents listed in Chapter 2 of that Code; prescribing regulations governing conditions hazardous to life and property from fire or explosion; providing for the issuance of permits and collection of fees; repealing Ordinance No._____ of the *[jurisdiction]* and all other ordinances and parts of ordinances in conflict therewith; providing a penalty; providing a severability clause; and providing for publication; and providing an effective date.

BE IT ORDAINED BY THE *[governing body]* OF THE *[jurisdiction]*:

Section 1: That *NFPA 1, Uniform Fire Code*™, 2006 edition, and documents adopted by Chapter 2, three (3) copies of which are on file and are open to inspection by the public in the office of the *[jurisdiction's keeper of records]* of the *[jurisdiction]*, are hereby adopted and incorporated into this ordinance as fully as if set out at length herein, and from the date on which this ordinance shall take effect, the provisions thereof shall be controlling within the limits of the *[jurisdiction]*. The same are hereby adopted as the *Code* of the *[jurisdiction]* for the purpose of prescribing regulations governing conditions hazardous to life and property from fire or explosion and providing for issuance of permits and collection of fees.

Section 2: Any person who shall violate any provision of this code or standard hereby adopted or fail to comply therewith; or who shall violate or fail to comply with any order made thereunder; or who shall build in violation of any detailed statement of specifications or plans submitted and approved thereunder; or failed to operate in accordance with any certificate or permit issued thereunder; and from which no appeal

has been taken; or who shall fail to comply with such an order as affirmed or modified by _____ or by a court of competent jurisdiction, within the time fixed herein, shall severally for each and every such violation and noncompliance, respectively, be guilty of a misdemeanor, punishable by a fine of not less than $ _____ nor more than $_____ or by imprisonment for not less than _____ days nor more than _____ days or by both such fine and imprisonment. The imposition of one penalty for any violation shall not excuse the violation or permit it to continue; and all such persons shall be required to correct or remedy such violations or defects within a reasonable time; and when not otherwise specified the application of the above penalty shall not be held to prevent the enforced removal of prohibited conditions. Each day that prohibited conditions are maintained shall constitute a separate offense.

Section 3: Additions, Insertions, and Changes. — That the *[year]* edition of NFPA 1, *Uniform Fire Code*™, 2006 edition, is amended and changed in the following respects:

[List Amendments]

Section 4: That ordinance No. _____ of *[jurisdiction]* entitled *[fill in the title of the ordinance or ordinances in effect at the present time]* and all other ordinances or parts of ordinances in conflict herewith are hereby repealed.

Section 5: That if any section, subsection, sentence, clause, or phrase of this ordinance is, for any reason, held to be invalid or unconstitutional, such decision shall not affect the validity or constitutionality of the remaining portions of this ordinance. The *[governing body]* hereby declares that it would have passed this ordinance, and each section, subsection, clause, or phrase hereof, irrespective of the fact that any one or more sections, subsections, sentences, clauses, and phrases be declared unconstitutional.

Section 6: That the *[jurisdiction's keeper of records]* is hereby ordered and directed to cause this ordinance to be published. *[NOTE: An additional provision may be required to direct the number of times the ordinance is to be published and to specify that it is to be in a newspaper in general circulation. Posting may also be required.]*

Section 7: That this ordinance and the rules, regulations, provisions, requirements, orders, and matters established and adopted hereby shall take effect and be in full force and effect *[time period]* from and after the date of its final passage and adoption.

Annex D Hazardous Materials Management Plans and Hazardous Materials Inventory Statements

This annex is not a part of the requirements of this NFPA document unless specifically adopted by the AHJ.

D.1 Scope. Hazardous materials inventory statements (HMIS) and hazardous materials management plans (HMMP), which are required by the AHJ pursuant to Chapter 60, shall be provided for hazardous materials in accordance with Annex D.

Exception No. 1: Materials which have been satisfactorily demonstrated not to present a potential danger to public health, safety, or welfare, based upon the quantity or condition of storage, when approved.

Exception No. 2: Chromium, copper, lead, nickel, and silver need not be considered hazardous materials for the purposes of this annex unless they are stored in a friable, powdered, or finely divided state. Proprietary and trade secret information shall be protected under the laws of the state or AHJ.

D.2 Hazardous Materials Inventory Statements (HMIS).

D.2.1 When Required. A separate HMIS shall be provided for each building, including its appurtenant structures, and each exterior facility in which hazardous materials are stored. The hazardous materials inventory statement shall list by hazard class all hazardous materials stored. The hazardous materials inventory statement shall include the following information for each hazardous material listed:

(1) Hazard class.
(2) Common or trade name.
(3) Chemical name, major constituents and concentrations if a mixture. If a waste, the waste category.
(4) Chemical Abstract Service number (CAS number) found in 29 Code of Federal Regulations (CFR).
(5) Whether the material is pure or a mixture, and whether the material is a solid, liquid or gas.
(6) Maximum aggregate quantity stored at any one time.
(7) Storage conditions related to the storage type, temperature and pressure.

D.2.2 Changes to HMIS. An amended HMIS shall be provided within 30 days of the storage of any hazardous materials that changes or adds a hazard class or that is sufficient in quantity to cause an increase in the quantity which exceeds 5 percent for any hazard class.

D.3 Hazardous Materials Management Plan (HMMP).

D.3.1 General. Applications for a permit to store hazardous materials shall include an HMMP standard form or short form in accordance with Section D.3 and shall provide a narrative description of the operations and processes taking place at the facility. *(See Figure D.3.1.)*

SAMPLE FORMAT
HAZARDOUS MATERIALS MANAGEMENT PLAN (HMMP) INSTRUCTIONS

SECTION I — FACILITY DESCRIPTION

1.1 Part A

1. Fill out Items 1 through 11 and sign the declaration.
2. Only Part A of this section is required to be updated and submitted annually, or within 30 days of a change.

1.2 Part B—General Facility Description (Site Plan)

1. Provide a site plan on 8½ in. by 11 in. (215 mm by 279 mm) paper, using letters on the top and bottom margins and numbers on the right and left side margins, showing the location of all buildings, structures, chemical loading areas, parking lots, internal roads, storm and sanitary sewers, wells, and adjacent property uses. Indicate the approximate scale, northern direction and date the drawing was completed.
2. List all special land uses within 1 mile (1.609 km).

1.3 Part C—Facility Storage Map (Confidential Information)

1. Provide a floor plan of each building on 8½ in. by 11 in. (215 mm by 279 mm) paper, using letters on the top and bottom margins and numbers on the right and left side margins, with approximate scale and northern direction, showing the location of each storage area. Mark map clearly "Confidential —Do Not Disclose" for trade-secret information as specified by federal, state, and local laws.
2. Identify each storage area with an identification number, letter, name, or symbol.
3. Show the following:
   (a) Accesses to each storage area.
   (b) Location of emergency equipment.
   (c) The general purpose of other areas within the facility.
   (d) Location of all aboveground and underground tanks to include sumps, vaults, below-grade treatment systems, piping, etc.
4. **Map key.** Provide the following on the map or in a map key or legend for each storage area:
   (a) A list of hazardous materials, including wastes.
   (b) Hazard class of each hazardous waste.
   (c) The maximum quantity for hazardous materials.
   (d) Include the contents and capacity limit of all tanks at each area and indicate whether they are above or below ground.
   (e) List separately any radioactives, cryogens, and compressed gases for each facility.
   (f) Trade-secret information shall be listed as specified by federal, state, and local laws.

SECTION II — HAZARDOUS MATERIALS INVENTORY STATEMENT (HMIS)

2.1 Part A—Declaration

Fill out all appropriate information.

2.2 Part B—Inventory Statement

1. You must complete a separate inventory statement for all waste and nonwaste hazardous materials. List all hazardous materials in alphabetical order by hazard class.
2. Inventory Statement Instructions.

Column	Information Required
1	Provide hazard class for each material.
2	**Nonwaste.** Provide the common or trade name of the regulated material. **Waste.** In lieu of trade names, you may provide the waste category.
3	Provide the chemical name and major constituents and concentrations, if a mixture.
4	Enter the chemical abstract service number (CAS number) found in 29 CFR. For mixtures, enter the CAS number of the mixture as a whole if it has been assigned a number distinct from its constituents. For a mixture that has no CAS number, leave this item blank or report the CAS numbers of as many constituent chemicals as possible.
5	Enter the following descriptive codes as they apply to each material. You may list more than one code, if applicable. P = Pure M = Mixture S = Solid L = Liquid G = Gas
6	Provide the maximum aggregate quantity of each material handled at any one time by the business. For underground tanks, list the maximum volume [in gallons (liters)] of the tank. Enter the estimated average daily amount on site during the past year.
7	Enter the units used in Column 6 as: Lb = Pounds Ga = Gallons Cf = Cubic Feet
8	Enter the number of days that the material was present on site (during the last year).

© 2006 National Fire Protection Association NFPA 1 (p. 1 of 8)

FIGURE D.3.1 Sample Format of Hazardous Materials Management Plan (HMMP) Instructions.

Column	Information Required
9	Enter the storage codes below for type, temperature, and pressure:

Type

A = Aboveground Tank
B = Belowground Tank
C = Tank Inside Building
D = Steel Drum
E = Plastic or Nonmetallic Drum
F = Can
G = Carboy
H = Silo
I = Fiber Drum
J = Bag
K = Box
L = Cylinder
M = Glass Bottle or Jug
N = Plastic Bottles or Jugs
O = Tote Bin
P = Tank Wagon
Q = Rail Car
R = Other

Temperature

4 = Ambient
5 = Greater than Ambient
6 = Less than Ambient, but not Cryogenic [less than –150°F (–101.1°C)]
7 = Cryogenic conditions [less than –150°F (–101.1°C)]

Pressure

1 = Ambient (Atmospheric)
2 = Greater than Ambient (Atmospheric)
3 = Less than Ambient (Atmospheric)

10 For each material listed, provide the SARA Title III hazard class as listed below. You may list more than one class. These categories are defined in 40 CFR 370.3.

Physical Hazard

F = Fire
P = Sudden Release of Pressure
R = Reactivity

Health Hazard

I = Immediate (Acute)
D = Delayed (Chronic)

11 **Waste Only.** For each waste, provide the total estimated amount of hazardous waste handled throughout the course of the year.

SECTION III—SEPARATION AND MONITORING

3.1 Part A—Aboveground

Fill out Items 1 through 6, or provide similar information for each storage area shown on the facility map. Use additional sheets as necessary.

3.2 Part B—Underground

1. Complete a separate page for each underground tank, sump, vault, belowgrade treatment system, etc.
2. Check the type of tank and method(s) that applies to your tank(s) and piping, and answer the appropriate questions. Provide any additional information in the space provided or on a separate sheet.

SECTION IV—WASTE DISPOSAL

Check all that apply and list the associated wastes for each method checked.

SECTION V—RECORD KEEPING

Include a brief description of your inspection procedures. You are also required to keep an inspection log and recordable discharge log, which are designed to be used in conjunction with routine inspections for all storage facilities or areas. Place a check in each box that describes your forms. If you do not use the sample forms, provide copies of your forms for review and approval.

SECTION VI—EMERGENCY RESPONSE PLAN

1. This plan should describe the personnel, procedures, and equipment available for responding to a release or threatened release of hazardous materials that are stored, handled, or used on site.
2. A check or a response under each item indicates that a specific procedure is followed at the facility, or that the equipment specified is maintained on site.
3. If the facility maintains a more detailed emergency response plan on site, indicate this in Item 5. This plan shall be made available for review by the inspecting jurisdiction.

SECTION VII—EMERGENCY RESPONSE TRAINING PLAN

1. This plan should describe the basic training plan used at the facility.
2. A check in the appropriate box indicates the training is provided or the records are maintained.
3. If the facility maintains a more detailed emergency response training plan, indicate this in Item 4. This plan shall be made available for review by the inspecting jurisdiction.

© 2006 National Fire Protection Association NFPA 1 (p. 2 of 8)

FIGURE D.3.1 *Continued*

HAZARDOUS MATERIALS MANAGEMENT PLAN
SECTION I: FACILITY DESCRIPTION

Part A — General Information

1. Business Name: _____ Phone: _____
   Address: _____
2. Person Responsible for the Business:

Name	Title	Phone

3. Emergency Contacts:

Name	Title	Home Number	Work Number

4. Person Responsible for the Application/Principal Contact:

Name	Title	Phone

5. Property Owner:

Name	Address	Phone

6. Principal Business Activity: _____
7. Number of Employees: _____
8. Number of Shifts: _____
9. Hours of Operation: _____
10. SIC Code: _____
11. Dunn and Bradstreet Number: _____
12. Declaration:
    I certify that the information above and on the following parts is true and correct to the best of my knowledge.

    Signature: _____ Date: _____
    Print Name: _____ Title: _____
    (Must be signed by owner/operator or designated representative)

Part B — General Facility Description/Site Plan

(Use grid format in Part C)

Special land uses within 1 mile (1.609 km): _____

_____

_____

_____

© 2006 National Fire Protection Association NFPA 1 (p. 3 of 8)

FIGURE D.3.1 *Continued*

SECTION I: FACILITY DESCRIPTION (Continued)

Part C—Facility Map

(Use grid format below)

	A	B	C	D	E	F	G	H	I	J	K	L	M	N	
1															1
2															2
3															3
4															4
5															5
6															6
7															7
8															8
9															9
10															10
11															11
12															12
13															13
14															14
15															15
16															16
17															17
	A	B	C	D	E	F	G	H	I	J	K	L	M	N	

BUSINESS NAME	DATE
ADDRESS CITY	PAGE____ OF____

SECTION II: HAZARDOUS MATERIALS INVENTORY STATEMENT

Part A—Declaration

1. Business Name: _____
2. Address: _____
3. Declaration:
   Under penalty of perjury, I declare the above and subsequent information, provided as part of the hazardous materials inventory statement, is true and correct.

Signature: _____ Date: _____

Print Name: _____ Title: _____

(Must be signed by owner/operator or designated representative)

© 2006 National Fire Protection Association NFPA 1 (p. 4 of 8)

FIGURE D.3.1 *Continued*

SECTION II: HAZARDOUS MATERIALS INVENTORY STATEMENT (Continued)

Part B—Hazardous Materials Inventory Statement

(1) Hazard Class	(2) Common/ Trade Name	(3) Chemical Name, Components and Concentration	(4) Chemical Abstract Service No.	(5) Physical State

(6) Maximum Quantity on Hand at Any Time	(7) Units	(8) Days on Site	(9) Storage Code (Type, Pressure, Temperature)	(10) SARA Class	(11) Annual Waste Throughput

SECTION III: SEPARATION, SECONDARY CONTAINMENT, AND MONITORING

Part A—Aboveground Storage Areas

Storage Area Identification (as shown on facility map): _____

1. Storage Type:
   - ____ Original Containers
   - ____ Inside Machinery
   - ____ 55 gal (208.2 L) Drums or Storage Shed
   - ____ Pressurized Vessel
   - ____ Safety Cans
   - ____ Bulk Tanks
   - ____ Outside Barrels
   - ____ Other: _____
2. Storage Location:
   - ____ Inside Building
   - ____ Secured
   - ____ Outside Building
3. Separation:
   - ____ All Materials
   - ____ Compatible
   - ____ Separation by 20 ft (6.1 m)
   - ____ One-Hour Separation Wall/Partition
   - ____ Approved Cabinets
   - ____ Other: _____

© 2006 National Fire Protection Association NFPA 1 (p. 5 of 8)

FIGURE D.3.1 *Continued*

SECTION III: SEPARATION, SECONDARY CONTAINMENT, AND MONITORING *(Continued)*

4. Secondary Containment:
   - ____ Approved Cabinet
   - ____ Tray
   - ____ Vaulted Tank
   - ____ Double-Wall Tank
   - ____ Secondary Drums
   - ____ Bermed, Coated Floor
   - ____ Other: _____

5. Monitoring:
   - ____ Visual
   - ____ Continuous
   - ____ Other: _____

Attach specifications if necessary

6. Monitoring Frequency:
   - ____ Daily
   - ____ Weekly
   - ____ Other: _____

Attach additional sheets as necessary

Part B—Underground

Single-Wall Tanks and Piping

Tank Area Identification (as shown on facility map): _____

1. ____ Backfill Vapor Wells
   Model and Manufacturer: _____
   Continuous or Monthly Testing: _____
2. ____ Groundwater Monitoring Wells
3. ____ Monthly Precision Tank Test
4. ____ Piping
   Monitoring Method: _____
   Frequency: _____
5. ____ Other: _____

Double-Wall Tanks and Piping

Tank Area Identification (as shown on facility map): _____

1. Method of monitoring the annular space: _____
2. Frequency: ❑ Continuous ❑ Daily ❑ Weekly ❑ Other: _____
3. List the type of secondary containment for piping: _____
4. List method of monitoring the secondary containment for piping: _____
5. Are there incompatible materials within the same vault? ❑ Yes ❑ No
   If yes, how is separate secondary containment provided? _____

Note: If you have continuous monitoring equipment, you shall maintain copies of all service and maintenance work. Such reports shall be made available for review on site, and shall be submitted to the fire prevention bureau upon request.

Attach additional sheets as necessary

SECTION IV: WASTE DISPOSAL

____ Discharge to the Sanitary Sewer—
Wastes: _____

____ Licensed Waste Hauler—
Wastes: _____

____ Pretreatment—
Wastes: _____

____ Recycle—
Wastes: _____

© 2006 National Fire Protection Association NFPA 1 (p. 6 of 8)

FIGURE D.3.1 *Continued*

SECTION IV: WASTE DISPOSAL *(Continued)*

_____ Other—
Describe Method: _____
Wastes: _____

_____ No Waste

SECTION V: RECORD KEEPING

Description of our inspection program: _____

_____ We will use the attached sample forms in our inspection program.
_____ We will not use the sample forms. We have attached a copy of our own forms.

SECTION VI: EMERGENCY RESPONSE PLAN

1. In the event of an emergency, the following shall be notified:
   A. On-Site Responders:

Name	Title	Phone

   B. Method of Notification to Responder:
      _____ Automatic Alarm
      _____ Manual Alarm
      _____ Phone
      _____ Verbal
      _____ Other: _____
   C. Agency and Phone Number: _____
      Fire Department: _____
      State Office of Emergency: _____
      Services: _____
      Other: _____
2. Designated Local Emergency Medical Facility:

Name	Address	Phone (24 hours)

3. Mitigation Equipment:
   A. Monitoring Devices:
      _____ Toxic or Flammable Gas Detection
      _____ Fluid Detection
      _____ Other: _____
   B. Spill Containment:
      _____ Absorbents
      _____ Other: _____
   C. Spill Control and Treatment
      _____ Vapor Scrubber
      _____ Pumps/Vacuums
      _____ Neutralizer
      _____ Mechanical Ventilation
      _____ Secondary Containment
      _____ Other: _____

© 2006 National Fire Protection Association NFPA 1 (p. 7 of 8)

FIGURE D.3.1 *Continued*

SECTION VI: EMERGENCY RESPONSE PLAN *(Continued)*

4. Evacuation:
   _____ Immediate area evacuation routes posted
   _____ Entire building evacuation procedures developed
   _____ Assembly areas preplanned
   _____ Evacuation maps posted
   _____ Other: _____

5. Supplemental hazardous materials emergency response plan on site.
   Location: _____
   Responsible Person: _____
   Phone: _____

SECTION VII: EMERGENCY RESPONSE TRAINING PLAN

1. Person responsible for the emergency response training plan:

Name	Title	Phone

2. Training Requirements:
   A. All employees trained in the following as indicated:
      _____ Procedures for internal alarm/notification
      _____ Procedures for notification of external emergency response organizations
      _____ Location and content of the emergency response plan
   B. Chemical handlers are trained in the following as indicated:
      _____ Safe methods for handling and storage of hazardous materials
      _____ Proper use of personal protective equipment
      _____ Locations and proper use of fire- and spill-control equipment
      _____ Specific hazards of each chemical to which they may be exposed
   C. Emergency response team members are trained in the following:
      _____ Procedures for shutdown of operations
      _____ Procedures for using, maintaining, and replacing facility emergency and monitoring equipment

3. The following records are maintained for all employees:
   _____ Verification that training was completed by the employee
   _____ Description of the type and amount of introductory and continuing training
   _____ Documentation on and description of emergency response drills conducted at the facility

4. A more comprehensive and detailed emergency response training plan is maintained on site.
   Location: _____
   Responsible Person: _____
   Phone: _____

© 2006 National Fire Protection Association NFPA 1 (p. 8 of 8)

FIGURE D.3.1 *Continued*

D.3.2 Information Required. The HMMP standard form shall include the following information.

D.3.2.1 General Information. General information, including business name and address, emergency contacts, business activity, business owner or operator, SIC code, number of employees and hours, Dunn and Bradstreet number, and signature of owner, operator, or designated representative.

D.3.2.2 General Site Plan. A general site plan drawn at a legible scale which shall include, but not be limited to, the location of buildings, exterior storage facilities, permanent access ways, evacuation routes, parking lots, internal roads, chemical loading areas, equipment cleaning areas, storm and sanitary sewer accesses, emergency equipment, and adjacent property uses. The exterior storage areas shall be identified with the hazard class and the maximum quantities per hazard class of hazardous materials stored. When required by the AHJ, information regarding the location of wells, flood plains, earthquake faults, surface water bodies, and general land uses within 1 mile (1.6 km) of the facility boundaries shall be included.

D.3.2.3 Building Floor Plan. A building floor plan drawn to a legible scale, which shall include, but not be limited to, hazardous materials storage areas within the building and shall indicate rooms, doorways, corridors, means of egress and evacuation routes. Each hazardous materials storage facility shall be identified by a map key that lists the individual hazardous materials, their hazard class, and quantity present for each area.

D.3.2.4 Hazardous Materials Handling. Information showing that activities involving the handling of hazardous materials between the storage areas and manufacturing processes on site are conducted in a manner to prevent the accidental release of such materials.

D.3.2.5 Chemical Compatibility and Separation. Information showing procedures, controls, signs, or other methods used to ensure separation and protection of stored materials from factors that could cause accidental ignition or reaction of ignitable, reactive, or incompatible materials in each area.

D.3.2.6 Monitoring Program. Information including, but not limited to, the location, type, manufacturer's specifications, if applicable, and suitability of monitoring methods for each storage facility when required.

D.3.2.7 Inspection and Record Keeping. Schedules and procedures for inspecting safety and monitoring and emergency equipment. The permittee shall develop and follow a written inspection procedure acceptable to the AHJ for inspecting the facility for events or practices that could lead to unauthorized discharges of hazardous materials. Inspections shall be conducted at a frequency appropriate to detect problems prior to a discharge. An inspection check sheet shall be developed to be used in conjunction with routine inspections. The check sheet shall provide for the date, time, and location of inspection; note problems and dates and times of corrective actions taken; and include the name of the inspector and the countersignature of the designated safety manager for the facility.

D.3.2.8 Employee Training. A training program appropriate to the types and quantities of materials stored or used shall be conducted to prepare employees to safely handle hazardous materials on a daily basis and during emergencies. The training program shall include the following:

(1) Instruction in safe storage and handling of hazardous materials, including maintenance of monitoring records
(2) Instruction in emergency procedures for leaks, spills, fires or explosions, including shutdown of operations and evacuation procedures
(3) Record-keeping procedures for documenting training given to employees

D.3.2.9 Emergency Response. A description of facility emergency procedures is to be provided.

D.3.3 HMMP Short Form — (Minimal Storage Site). A facility shall qualify as a minimal storage site if the quantity of each hazardous material stored in one or more facilities in an aggregate quantity for the facility is 500 lb (227 kg) or less for solids, 55 gal (208.2 L) or less for liquids, or 200 ft^3 (5.7 m^3) or less at NTP for compressed gases and does not exceed the threshold planning quantity as listed in 40 CFR, Part 355, Sections 302 and 304. The applicant for a permit for a facility that qualifies as a minimal storage site shall be permitted to file the short form HMMP. Such plan shall include the following components:

(1) General facility information
(2) A simple line drawing of the facility showing the location of storage facilities and indicating the hazard class or classes and physical state of the hazardous materials being stored
(3) Information describing that the hazardous materials will be stored and handled in a safe manner and will be appropriately contained, separated, and monitored
(4) Assurance that security precautions have been taken, employees have been appropriately trained to handle the hazardous materials and react to emergency situations, adequate labeling and warning signs are posted, adequate emergency equipment is maintained, and the disposal of hazardous materials will be in an appropriate manner

D.4 Maintenance of Records. Hazardous materials inventory statements and hazardous materials management plans shall be maintained by the permittee for a period of not less than three (3) years after submittal of updated or revised versions. Such records shall be made available to the AHJ upon request.

Annex E Model Citation Program

This annex is not a part of the requirements of this NFPA document but is included for informational purposes only.

E.1 General.

E.1.1 Scope. Many agencies charged with the responsibility of enforcing NFPA 1, *Uniform Fire Code*™, have determined that the issuance of citations is necessary for gaining compliance in some circumstances. Therefore, the following outline and examples have been drawn up to assist jurisdictions in the formulation of a citation program.

E.1.2 Initiating Correspondence. *(See Figure E.1.2.)* The first step in establishing a citation program is to write a letter to the appropriate legal officer of the jurisdiction stating the need, legal basis, and intent to establish a program of this type. This letter should prompt a reply from the legal officer advising the enforcing agency of the action necessary to implement the program.

E.1.3 Citation Ordinance. *(See Figure E.1.3.)* In a few jurisdictions, the legal officer has advised the enforcing agency that a municipal ordinance must be passed to allow for the issuance of citations. In such cases, a model ordinance is provided as an example.

Model Citation Initiation Correspondence

Address correspondence to the appropriate legal officer in the municipality or district (i.e., city attorney or district attorney).

Dear_____:

The_____ Fire Department is proposing to initiate a citation program. This department has determined that there is a need for this type of action and, in some applications, would appropriately serve the legal process. To date, where we have been unable to gain compliance through routine inspection, notifications, reinspections, granting of time, explanations and extensions, we have had to file formal complaints. This process has consistently resulted in extended delays, continuing violations, and added work for legal departments. Also, in special situations where immediate action must be taken, citations could be issued to individuals violating the law.

This department is currently required by law to enforce laws pertaining to fire and life safety. Sections 1.7.1, 1.7.5.1, 1.7.5.2 and 1.7.5.3 of NFPA 1, *Uniform Fire Code*™, read as follows:

1.7.1 This *Code* shall be administered and enforced by the AHJ designated by the governing authority.

1.7.5.1 The AHJ shall be authorized to inspect, at all reasonable times, any building or premises for dangerous or hazardous conditions or materials as set forth in this *Code*.

1.7.5.2 The AHJ shall have authority to order any person(s) to remove or remedy such dangerous or hazardous condition or material. Any person(s) failing to comply with such order shall be in violation of this *Code*.

1.7.5.3 To the full extent permitted by law, any AHJ engaged in fire prevention and inspection work shall be authorized at all reasonable times to enter and examine any building, structure, marine vessel, vehicle, or premises for the purpose of making fire safety inspections.

These provisions of NFPA 1, *Uniform Fire Code*™, make it clear that fire fighters have the powers to enforce NFPA 1, *Uniform Fire Code*™.

It would be our intent to continue to follow the normal notice procedure presently being used and to issue citations only in those situations where it is deemed applicable. Citations would not be issued at the time of first contact except in unusual circumstances.

The proposed program would eliminate the clerical and legal work of many cases which currently must go through the complaint process.

Please review the program as submitted and contact_____ _____ for your response to the proposed program.

FIGURE E.1.2 Model Citation Initiation Correspondence.

ORDINANCE NO. _____

AN ORDINANCE OF THE CITY OF_____ ADDING SECTION _____TO THE_____ MUNICIPAL CODE, PROVIDING FOR THE CITY COUNCIL DESIGNATION OF OFFICERS AND EMPLOYEES AUTHORIZED TO ISSUE ARREST CITATIONS.

– – – –

THE CITY COUNCIL OF THE CITY OF_____ DOES ORDAIN AS FOLLOWS:

SECTION 1. Chapter_____ of the_____ Municipal Code is hereby amended by the addition thereto of a new section, to be numbered_____ and reading as follows:

_____ **Issuance of Citations by Designated Officers and Employees.** Officers and employees of the city who have the discretionary duty to enforce a statute or ordinance may, pursuant to Section _____ of (*state law*) and subject to the provisions hereof, arrest a person without a warrant whenever any such officer or employee has reasonable cause to believe that the person to be arrested has committed a misdemeanor in the officer's or employee's presence which he or she has the discretionary duty to enforce, and to issue a notice to appear and to release such person on the person's written promise to appear in court, pursuant to Section _____of the (*state law*). Officers and employees shall not be allowed by their superior to exercise the arrest and citation authority herein conferred, unless such officer or employee is within a classification of city officers and employees designated by resolution of the city council to exercise such arrest and citation authority as to specified misdemeanor violations. The city manager shall establish and cause to be administered a special enforcement training program designed to instruct each officer or employee who will exercise such arrest and citation authority, regarding the provisions of the statutes and ordinances to be enforced, the evidentiary prerequisites to proper prosecution for violations thereof, the appropriate procedures for making arrests or otherwise prudently exercising such arrest and citation authority, and the legal and practical ramifications and limitations attendant thereto. Any such officers or employees shall be appropriately instructed to deposit executed citations or notices within the (*appropriate agency*) for filing with the court after review for legal sufficiency.

SECTION 2. Effective Date. This ordinance shall be in full force and effect thirty (30) days after passage.

SECTION 3. Publication. The city clerk is hereby ordered and directed to certify to the passage of this ordinance and to cause same to be published once in _____, a daily newspaper of general circulation, printed, published and circulated in the City of _____ , _____ .

ADOPTED this _____ day of _____ , 20____ .

FIGURE E.1.3 Model Citation Ordinance.

_____ Date
_____ Certified Mail—Return receipt requested
_____ Delivered in person

Dear _____:

The _____ Fire Department conducted a firesafety inspection at the following:

Name _____

Address _____

on (date) _____

At that time a notice was issued indicating the corrections required to provide compliance with the applicable codes, regulations and ordinances. Compliance is required by NFPA 1, *Uniform Fire Code™*, Paragraph 1.7.5.2.

Reinspections were made on _____ (*date of reinspection*) in an attempt to gain compliance with the above-mentioned Fire Code regulations. We were unsuccessful in obtaining compliance.

This letter is to inform you that a fire inspector for the _____ _____ Fire Department will make a reinspection at the above-mentioned establishment on_____ to determine if the necessary corrections have been made. If the necessary corrections have not been completed by_____, a citation will be issued which will require an appearance by you in court.

This letter is written as a courtesy to you in order to avoid future litigation.

Name _____

Title _____

FIGURE E.1.5(a) Pre-Citation Letter.

E.1.4 Citation Program. In the majority of cases, the legal officer has required the enforcing agency to submit the complete program to the legal officer's office for review and approval.

E.1.5 Components. The necessary components of a complete citation program include the following:

(1) Operating Procedure and Policy. See Section E.2.
(2) Sample Forms. See Figure E.1.5(a) and Figure E.1.5(b).
(3) Bail Schedule. See Figure E.1.5(c).

E.2 Operating Procedure Citation Program.

E.2.1 Department Policy. The fire prevention bureau shall be responsible for the enforcement of laws and regulations for the safeguarding, to a reasonable degree, of life and property from the hazards of fire and explosion and from conditions hazardous to life and property in the use or occupancy of buildings or premises and their contents.

It is the intent of the department to achieve compliance by traditional means of inspection, notification, granting of reasonable time to comply, and reinspection. The citation shall be used only after all reasonable means to gain compliance have failed or, with proper justification, at the discretion of the AHJ.

By department policy, only those members of the fire department specifically designated by the AHJ shall be permitted to issue citations.

The adoption of NFPA 1, *Uniform Fire Code*, 2006 edition, is contained in the _____ Ordinance, Division _____, Article _____, Section _____, and establishes the procedures for handling violations of said code and applicable city ordinances.

E.2.2 Purpose. The purpose of the citation program shall be as follows:

(1) To gain compliance with the state and local codes, ordinances, and regulations, when all reasonable efforts have been unsuccessful.
(2) To provide a course of action to be taken when a condition exists that causes an immediate or extreme threat to life or property from fire and explosion.

E.2.3 Authority. The citation program is authorized as follows:

(1) _____ Ordinance, Section _____, grants authority to use citations for violations of "any ordinance of the _____."
(2) NFPA 1, *Uniform Fire Code*, Section 1.7.7 states, "Where conditions exist and are deemed hazardous to life and property by the AHJ, the AHJ shall have the authority to summarily abate such hazardous conditions that are in violation of this Code."
(3) Pursuant to state law (*section*), citations for misdemeanors, any local or state code applicable to fire and life safety might be cited.

E.2.4 Penalty. _____ Ordinances: Not more than $500.00 fine; imprisonment not more than six months; or both. A misdemeanor. Each day is a separate offense.

E.2.5 Materials Helpful in Writing a Citation.

(1) NFPA 1, *Uniform Fire Code*
(2) List of court holidays
(3) List of common codes and sections violated

E.2.6 Officer's Demeanor. The manner in which the officer conducts a relationship with the violator is of paramount importance. It has an effect on the violator's attitude throughout the duration of the citing period and a strong bearing on public opinion concerning this department. A courteous and businesslike demeanor must be displayed, and officers should never enter into an argument. Remember, most violators blame the officer, not themselves. An alert, confident manner and a reasonable attitude can affect the violator, creating a more favorable atmosphere for the issuance of the citation.

E.2.7 Salutation or Introduction. It is very important for officers to adequately introduce themselves, establish their identity and the purpose of their presence to the person in charge of the premises.

E.2.8 Reason to Issue Citation. Citations will not normally be issued on the first visit. When routine violations of the applicable fire code are encountered, citations will generally be issued following the third visit or second reinspection.

If code compliance has not been obtained on the second visit or the first reinspection, the inspector should mention the possibility of a citation and the need to issue one. In all cases, adequate time shall be provided between inspections. This will vary with the seriousness of the violation and the complexity of the work to be done.

In those instances where the time limit for compliance has expired but the violator is making a reasonable effort to comply and no immediate fire or life hazard exists, the decision not to issue a citation can be made by the inspector.

E.2.9 Issuance of Citation. The citation (Notice to Appear) must be signed by the person responsible for the premises. This might be the owner, lessee or manager, but the citation must be issued to the responsible person.

FORMS APPROVED BY JUDICIAL COUNCIL
[Form for Uniform Misdemeanor Citation]
FACE SIDE OF THE FORM

CITY OF

NOTICE TO APPEAR **NO. 0001**

DATE 20			TIME M		DAY OF WEEK
NAME (FIRST, MIDDLE, LAST)					
RESIDENCE ADDRESS			CITY		
BUSINESS ADDRESS			CITY		
DRIVER'S LICENSE NO.			STATE	CLASS	BIRTHDATE
SEX M F	HAIR	EYES	HEIGHT	WEIGHT	OTHER DES.
EMPLOYED BY				OCCUPATION	
BIRTHPLACE				SOCIAL SECURITY NO.	
VEHICLE LICENSE NO.			STATE		
YEAR OF VEHICLE	MAKE		MODEL	BODY STYLE	COLOR
OFFENSE(S)	CODE	SECTION	DESCRIPTION		
EVIDENCE SEIZED					BOOKING REQUIRED ☐
LOCATION OF OFFENSE(S) COMMITTED					
☐ OFFENSE(S) NOT COMMITTED IN MY PRESENCE. CERTIFIED ON INFORMATION AND BELIEF. I CERTIFY UNDER PENALTY OF PERJURY THAT THE FOREGOING IS TRUE AND CORRECT, EXECUTED ON THE DATE SHOWN AT ABOVE					
ISSUING OFFICE			_____ (PLACE)		SERIAL NO.
NAME OF ARRESTING OFFICER — IF DIFFERENT FROM ABOVE				SERIAL NO.	VACATION DATED TO
WITHOUT ADMITTING GUILT, I PROMISE TO APPEAR AT THE TIME AND PLACE CHECKED BELOW. X SIGNATURE					
BEFORE A JUDGE OR A CLERK OF THE MUNICIPAL OR JUSTICE COURT (ADDRESS)					
DATE	20		TIME M		WITHIN 5 DAYS
FORM APPROVED BY THE JUDICIAL COUNCIL OF					

© 2006 National Fire Protection Association NFPA 1 (p. 1 of 3)

Grey areas indicate spaces subject to local or agency requirements.

FIGURE E.1.5(b) Citation Form.

RULES OF COURT
[Form for Uniform Misdemeanor Citation]
REVERSE SIDE OF VIOLATOR'S COPY

IMPORTANT—READ CAREFULLY

WARNING:
WILLFUL FAILURE TO APPEAR AS PROMISED IS A SEPARATE VIOLATION FOR WHICH YOU MAY BE ARRESTED AND PUNISHED BY 6 MONTHS IN JAIL AND/OR $500.00 FINE, REGARDLESS OF THE DISPOSITION OF THE ORIGINAL CHARGE.

OFFICE OF COURT CLERK—HOURS

(THIS SPACE FOR REMITTANCE CONTROL MACHINE ENTRIES)

© 2006 National Fire Protection Association NFPA 1 (p. 2 of 3)

FIGURE E.1.5(b) *Continued*

FORMS APPROVED BY JUDICIAL COUNCIL
[Form for Uniform Misdemeanor Citation]
REVERSE SIDE OF COURT COPY

BAIL:
THE DEFENDANT IS TO BE ADMITTED TO BAIL IN THE SUM OF_____ DOLLARS

_____
JUDGE

BOOKING: (TO BE ORDERED ONLY ON THE REQUEST OF ARRESTING OFFICER) THE DEFENDANT IS ORDERED TO REPORT TO THE [NAME OF THE ARRESTING AGENCY] AT [ADDRESS] AND TO BE BOOKED AS PROVIDED BY LAW.

_____
JUDGE

(THIS SPACE FOR REMITTANCE CONTROL MACHINE ENTRIES)

© 2006 National Fire Protection Association NFPA 1 (p. 3 of 3)

FIGURE E.1.5(b) *Continued*

Bail Schedule

SECTION	OFFENSE	BAIL
103.4.3.1	Noncompliance with Orders or Notices	$500.00
103.4.3.2	Noncompliance with Condemnation Tag	$500.00
103.4.3.3	Removal and Destruction of Tags and Signs	$500.00
103.4.4	Unlawful Continuance of Hazards	$500.00

All other violations are $75.00 plus court costs. Fines are forfeitable on first offense and mandatory appearance is required on second offense.

Insert local ordinances where applicable

FIGURE E.1.5(c) **Bail Schedule.**

E.2.10 Making the Arrest (Issue Citation). A citation for a misdemeanor offense is an arrest. The violator's signature is a promise to appear as instructed, and the violator is released upon the violator's signing. Refusal to sign would require physical arrest. *(See E.2.11.)*

After the officer has made a decision to arrest, the officer should make the arrest by notifying the violator that the violator is arrested, the cause for the arrest, and the authority to make the arrest (enabling state or local law).

E.2.11 Refusal to Sign Citation. The citation is a release stating that the defendant will appear in court or post bail in lieu of physical arrest. In extreme cases, one might encounter an individual who will refuse to sign the citation. After all reasonable efforts have been pursued and a signature is not obtainable, the fire prevention officer will summon a police officer or sheriff, explain the situation to such officer, and request a physical arrest (per state law).

E.2.12 Accountability. Each citation is numbered and accounted for. A list of all citations will be maintained in the headquarters fire prevention office according to the area office of issuance.

If a mistake is made while a citation is being written, it should be voided and the office copy given to the fire department citation clerk for filing.

E.2.13 Procedures.

E.2.13.1 Routine Violations. A written notice is issued whenever a code violation is encountered. The notice is issued to the persons responsible for the premises or their authorized representative.

The time established for reinspection can vary depending on circumstances, but generally, within 15 to 30 days, one of the following should occur:

(1) Compliance with all requirements
(2) Partial compliance with a designated reinspection date
(3) A satisfactory proposal for compliance with an agreed-upon time for completion
(4) A final notice issued with a warning of pending legal action

The amount of time permitted for compliance depends upon the hazard and danger created by the violation. Excessive time for compliance can weaken the fire department's position in the event legal action is required.

When deemed necessary by the enforcing agency, a courtesy pre-citation letter can be issued to warn of a pending citation *[see Figure E.1.5(a)]*. Such letters can be sent by certified mail if the violator is not available.

E.2.13.2 Imminent Hazards. Order hazard abated, and act according to the following:

(1) If the hazard is abated as requested, follow with a pre-citation letter advising of a citation procedure for future or similar violations. Citation can be issued if it is a repeat violation.
(2) If the hazard is not abated, inspector takes action necessary to abate the hazard and citation is issued immediately.

E.2.13.3 Transient Violations (violations not occurring at a permanent place of business).

(1) Violations involving persons who are transient are handled by a citation or by arrest if the violation is committed in the inspector's presence.
(2) When a physical arrest is necessary, a local law enforcement officer (sheriff or police) is requested to take the violator into custody and to ensure proper procedures are followed.

E.2.13.4 Citation Procedures. The citation procedures are as follows:

(1) Adults being cited must be able to be reached in the event a bench warrant is issued.
(2) Adults cited are cited in the local judicial court.
(3) Juveniles are cited in the juvenile court.
(4) Citation books are issued by citation number to the assigned inspector. The inspector is accountable for each citation by number.
(5) The citation is filled out completely and correctly and all pertinent information entered.
(6) When the citation is written and completed, copies will be distributed as follows:
    (a) Cited person's copy — give to violator.
    (b) Court copy (original) — attach copies of inspection notices and a summary sheet and deliver to the district attorney or the city attorney.
    (c) File copy (fire department's copy) — forward to the AHJ's office; a duplicate will be returned to the field office for the occupancy file.
(7) The fire department keeps a citation log entering each citation and final disposition.

E.2.14 Restrictions. Restrictions are as follows:

(1) Citations are issued only after all responsible means to gain voluntary compliance have been exhausted as supported by documentation.

Exception: Citations issued for violations that present imminent life hazards such as trespassing in a closed area, smoking in closed or restricted areas, failure to obey lawful orders of a fire inspector, faulty equipment or procedures, and violations of a similar nature will not require prior justification.

(2) Citations are issued only by qualified officers as designated by the AHJ.

E.2.15 Use of Citation. Uses of citations are as follows:

(1) Citations are used only where a violation of a specific section of the appropriate code or ordinance has occurred.

(2) Documentation establishing prior efforts to gain compliance must be in evidence.

Exception: Citations issued for violations that present imminent life hazards such as trespassing in a closed area, smoking in closed or restricted areas, failure to obey lawful orders of a fire inspector, faulty equipment or procedures, and violations of similar nature will not require prior justification.

(3) The issuing person must be qualified as required by state law.
(4) The offense for which the citation is issued is a misdemeanor and not a felony.
(5) The date to appear as shown on the citation is as set forth by the local municipal court from the date of issuance.
(6) Whenever the issuing person questions the uncertainty of releasing the violator upon signing the citation on his promise to appear, the assistance of a sheriff or police officer should be requested.
(7) All violations will be indicated on the citation with reference to the appropriate code or regulations, including the specific section number.
(8) All violations as shown on the citation will be explained to the violator prior to his signing.

Annex F Model Fees and Charges Program

This annex is not a part of the requirements of this NFPA document but is included for informational purposes only.

F.1 General.

F.1.1 Scope. Many agencies and jurisdictions charged with the responsibility of reviewing plans, issuing permits and conducting inspections relating to construction or installation of automatic sprinkler systems, alarm systems, hood and duct fire-extinguishing systems and other fire- and life-safety systems for compliance with the NFPA 1, *Uniform Fire Code*™, 2006 edition, and other laws and ordinances, and other services provided, have determined that fees and other charges are necessary to offset the cost of personnel and equipment. Therefore, the following outline and examples have been drawn up to assist jurisdictions in the formulation of a uniform fees and charges program.

F.1.2 Initiating Correspondence. The first step in establishing a fees and charges program is to write a letter to the appropriate legal officer of the jurisdiction stating the need, legal basis, and intent to establish a program of this type. This letter should prompt a reply from the legal officer advising the enforcing agency of the action necessary to implement the program.

F.1.3 Fee Ordinance. In many jurisdictions, the legal officer has advised the enforcing agency that a municipal ordinance must be passed to allow for the charging of permit and service fees. In such cases, this annex is provided as an example.

Each jurisdiction will have to design its ordinance according to its practices and local and state laws. This annex is designed as an example and guideline. This example is based on a permit fee and cost recovery system. The permit fee can be a calculation of the administrative costs of the service and the inspection and plan review designed to calculate charges based on hourly rate and the time spent working on the task.

Based on local considerations, it might not be appropriate to charge for some permits or services.

F.2 Permit and Service Fees Ordinance.

F.2.1 Purpose. The purpose of this ordinance is to establish fees for specific fire code permits as defined in NFPA 1, *Uniform Fire Code*™, 2006 edition, as adopted by this jurisdiction and for the establishment of fees for service performed by the bureau of fire prevention.

F.2.2 Definitions. All terminology not defined in this annex shall be defined as stated in NFPA 1, *Uniform Fire Code*™, 2006 edition, as adopted by this jurisdiction.

F.2.3 Permits and Service Fees. A fee in accordance with the following schedule shall be paid to the bureau of fire prevention at the time of application for: (1) a RENEWABLE PERMIT, (2) an INSTALLATION or REMOVAL and ALTERATION PERMIT, (3) an ACTIVITY PERMIT, (4) any OTHER SERVICE, (5) any RECORDS, PHOTOGRAPHS, or DOCUMENTS, or (6) a HAZARDOUS MATERIALS STORAGE PERMIT. Such fee shall not be refunded upon failure of an applicant to receive the permit. Failure to apply for necessary permits or service can result in an order from the fire marshal to obtain a permit or service. Such an order shall be considered as application made for the necessary permit or service.

Fees are payable upon permit application. Failure to pay for permit, plan review, or inspection fees imposed by this fee schedule, within the time period specified, shall render such permit null and void.

Exception: These permit charges shall not apply to activities of nonprofit corporations or civic or fraternal organizations that possess an Internal Revenue Service tax exempt status. However, these groups will be assessed plan review and inspection fees.

F.3 Standard Hourly Fee. There shall be a standard hourly fee of _____ dollars ($_____), with a one-hour minimum, charged for all inspection and plan review work unless specifically exempted.

All reinspections (follow-up inspections) shall be charged at the standard hourly fee with a one-half-hour minimum. When a requester fails to cancel a requested inspection prior to the time of the inspection, the first half-hour of the standard hourly fee will be charged.

All inspections, plan reviews, and consultations shall be charged this standard hourly fee, unless otherwise specified.

The standard hourly fee shall be adjusted at a rate that provides for cost recovery when the department is requested to review plans or conduct inspections as an extension to the normal work day.

F.4 Renewable Permit Fees.

F.4.1 General. When an inspection or plan review is conducted by the bureau of fire prevention to ensure proper design, installation, or permit compliance, the standard hourly fee for the first hour of inspection or the first hour of plan review, when required, shall be paid at the time of application. Fees for subsequent hours of plan review shall be paid prior to the issuance of the permit. Fees for subsequent hours of inspection shall be paid prior to issuance of a certificate of occupancy. The permit fee shall be in addition to the standard hourly fee in accordance with Table F.4.1.

Table F.4.1 Renewable Permit Fee Schedule

Permits Section 1.12	Permit Fee $
Aerosol products	
Aircraft hangars	
Aircraft refueling vehicles	
Aircraft terminals	
Ammonium nitrate	
Amusement parks	
Automatic fire suppression systems	
Automobile wrecking yards	
Bonfires and outdoor rubbish fires	
Calcium carbide	
Candles and open flames	
Carnivals and fairs	
Cellulose nitrate film	
Cellulose nitrate plastic	
Combustible fibers	
Combustible material storage	
Commercial rubbish-handling operations	
Compressed gases	
Consumer fireworks	
Covered mall buildings	
Cutting and welding operations	
Dust-producing operations	
Exhibit and trade shows	
Explosives	
Fire alarm and detection system and related equipment	
Fire hydrant use	
Fire pumps and related equipment	
Fireworks	
Flame effects	
Flammable and combustible liquids	
Flammable finish application	
Fumigation or thermal insecticidal fogging	
General storage	
Grandstands, folding and telescopic seating, tents, and membrane structures	
Hazardous materials	
High-piled combustible storage	
High powered rocketry	
Hot work operations	
Industrial ovens and furnaces	
Liquid- or gas-fueled vehicles and equipment	
LP-Gas	
Lumberyards and woodworking plants	
Magnesium	
Motion picture and television production studios, soundstages, and approved production facilities	
Open burning	
Organic coatings	
Outside storage of tires	
Ovens industrial baking or drying	
Oxidizers and organic peroxides	
Parade floats	
Places of assembly	
Private fire hydrants	

Table F.4.1 ***Continued***

Permits Section 1.12	Permit Fee $
Pyrotechnics before a proximate audience	
Pyroxylin plastics	
Refrigeration equipment	
Repair garages and service stations	
Rocketry manufacturing	
Roof-top heliports	
Special outdoor events	
Spraying or dipping operations	
Standpipe systems	
Tar kettles	
Temporary membrane structures, tents and canopies	
Tire storage	
Torch applied roofing operations	
Wood products	

F.4.2 Combination Renewable Permit Fees. When more than one type of renewable permit is required by Section 1.12 for a single occupancy, a combination permit can be issued for a single fee of _____ dollars ($_____).

F.5 Inspection and Plan Review Fees for Installation, Removal or Alteration of Equipment.

F.5.1 When an inspection or plan review is conducted by the bureau of fire prevention to ensure proper design and installation, the standard hourly fee for the first hour of inspection or the first hour of plan review, when required, shall be paid at the time of application. Fees for subsequent hours of plan review shall be paid prior to the issuance of the permit. Fees for subsequent hours of inspection shall be paid prior to issuance of a certificate of occupancy. *(See Table F.5.1.)*

Table F.5.1 Inspection and Plan Review Fee Schedule for Installation, Removal, or Alteration of Equipment

Permits Section 1.12	Permit Fee $
Aerosol products	
Aircraft fuel servicing	
Aircraft hangars	
Aircraft refueling vehicles	
Airport terminal buildings	
Ammonium nitrate	
Amusement parks	
Asbestos removal	
Automatic fire suppression systems	
Automobile wrecking yards	
Battery system	
Candles, open flames, and portable cooking	
Carnivals and fairs	
Cellulose nitrate film	
Cellulose nitrate plastic	
Cleanrooms	
Combustible fibers	
Combustible material storage	

(continues)

Table F.5.1 *Continued*

Permits Section 1.12	Permit Fee $
Commercial rubbish-handling operations	
Compressed gases	
Consumer fireworks (1.4 G)	
Covered mall buildings	
Cryogens	
Cutting and welding operations	
Display fireworks (1.3 G)	
Drycleaning plants	
Dust-producing operations	
Exhibit and trade shows	
Explosives	
Fire alarm and detection system and related equipment	
Fire hydrants and water-control valves	
Fire pumps and related equipment	
Flame effects	
Flammable and combustible liquids	
General storage	
Grandstands and bleachers, folding and telescopic seating	
Hazardous materials	
High-piled combustible storage	
High powered rocketry	
Hot work operations	
Industrial ovens and furnaces	
Liquefied petroleum gas	
Liquid- or gas-fueled vehicles	
Lumberyards and woodworking plants	
Marine craft fuel servicing	
Membrane structures, tents, and canopies — permanent	
Membrane structures, tents, and canopies — temporary	
Motion picture and television production studios, soundstages, and approved production facilities	
Oil- and gas-fueled heating appliances	
Open burning	
Open fires	
Organic coatings	
Organic peroxide formulations	
Outside storage of tires	
Oxidizers	
Parade floats	
Places of assembly	
Private fire hydrants	
Pyrotechnic articles	
Pyrotechnics before a proximate audience	
Pyroxylin plastics	
Refrigeration equipment	
Repair garages and service stations	
Rocketry manufacturing	
Roof-top heliports	
Solvent extraction	
Spraying or dipping of flammable finish	
Standpipe systems	
Special outdoor events, carnivals, and fairs	

Table F.5.1 *Continued*

Permits Section 1.12	Permit Fee $
Tar kettles	
Tire rebuilding plants	
Tire storage	
Torch applied roofing operations	
Wildland fire–prone areas	
Wood products	

F.6 Inspection or Plan Review Fees for Activity Permits.

F.6.1 General. When an inspection or plan review is conducted by the bureau of fire prevention to ensure proper design, installation, or permit compliance, the standard hourly fee for the first hour of inspection or the first hour of plan review, when required, shall be paid at the time of application. Fees for subsequent hours of plan review and inspection shall be paid prior to the issuance of the permit. A separate permit for a specific period of time shall be obtained for each location where such operations are performed. The permit fee shall be in addition to the standard hourly fee in accordance with Table F.6.1.

Table F.6.1 Inspection and Plan Review Fee Schedule for Activity Permits

Permits Section 1.12	Permit Fee $
Aerosol products	
Aircraft fuel servicing	
Aircraft hangars	
Aircraft refueling vehicles	
Airport terminal buildings	
Ammonium nitrate	
Amusement parks	
Asbestos removal	
Automatic fire suppression systems	
Automobile wrecking yards	
Battery system	
Candles, open flames, and portable cooking	
Carnivals and fairs	
Cellulose nitrate film	
Cellulose nitrate plastic	
Cleanrooms	
Combustible fibers	
Combustible material storage	
Commercial rubbish-handling operations	
Compressed gases (1.4 G)	
Consumer fireworks	
Covered mall buildings	
Cryogens	
Cutting and welding operations	
Display fireworks (1.3 G)	
Drycleaning plants	
Dust-producing operations	
Exhibit and trade shows	
Explosives	

Table F.6.1 *Continued*

Permits Section 1.12	Permit Fee $
Fire alarm and detection system and related equipment	
Fire hydrants and water-control valves	
Fire pumps and related equipment	
Flame effects	
Flammable and combustible liquids	
General storage	
Grandstands and bleachers, folding and telescopic seating	
Hazardous materials	
High-piled combustible storage	
High powered rocketry	
Hot work operations	
Industrial ovens and furnaces	
Liquefied petroleum gas	
Liquid- or gas-fueled vehicles	
Lumberyards and woodworking plants	
Marine craft fuel servicing	
Membrane structures, tents, and canopies — permanent	
Membrane structures, tents, and canopies — temporary	
Motion picture and television production studios, soundstages, and approved production facilities	
Oil- and gas-fueled heating appliances	
Open burning	
Open fires	
Organic coatings	
Organic peroxide formulations	
Outside storage of tires	
Oxidizers	
Parade floats	
Places of assembly	
Private fire hydrants	
Pyrotechnic articles	
Pyrotechnics before a proximate audience	
Pyroxylin plastics	
Refrigeration equipment	
Repair garages and service stations	
Rocketry manufacturing	
Roof-top heliports	
Solvent extraction	
Special outdoor events, carnivals, and fairs	
Spraying or dipping of flammable finish	
Standpipe systems	
Tar kettles	
Tire rebuilding plants	
Tire storage	
Torch applied roofing operations	
Wildland fire–prone areas	
Wood products	

F.6.2 Fees for Other Services. When other services by the bureau of fire prevention are required, the fees in Table F.6.2 shall be paid.

F.7 Fees for Records, Photographs, and Documents.

F.7.1 The fees in Table F.7.1 shall be paid for fire department records, photographs, and documents, except for records subpoenaed. (Note: Consideration should be given to any laws regulating the release of public records.)

Table F.6.2 Fee Schedule for Other Services

Service	Service Fee $
Applications for Use of Alternate Methods Application	
Consultation (including review of projects prior to submission for a building permit and of projects that do not require a building permit)	Standard hourly fee
Consultation (including those done under NFPA 1, *Uniform Fire Code*™, section allowing technical assistance)	Consultant's hourly fee
Fire Watch Service (___-hour minimum)	Standard hourly fee
Hydrant Flow Test	Standard hourly fee
Inspection and Plan Reviews	Standard hourly fee
Inspections Mandated by State or Federal Law	Standard hourly fee
Lock Box Service	
Review Fee	Standard hourly fee

Table F.7.1 Fee Schedule for Records, Photographs, and Documents

Item	Fee $
1. Any fire department record (including fire report/investigation report)	per page
2. Audio cassette tapes	
3. Photographs:	
(a) Black and white	
3½ in. by 3½ in. (88.9 mm by 88.9 mm)	
4 in. by 5 in. (101.6 mm by 127 mm)	
3½ in. by 5 in. (88.9 mm by 127 mm)	
(b) Color	
3½ in. by 3½ in. (88.9 mm by 88.9 mm)	
4 in. by 5 in. (101.6 mm by 127 mm)	
3½ in. by 5 in. (88.9 mm by 127 mm)	
8 in. by 10 in. (203.2 mm by 254 mm)	
(c) Enlargements:	
Black and white	
Color	
(d) VCR tape	

F.8 Annual Hazardous Materials Storage Permit Fee.

F.8.1 The annual fee is $_____ per quantity range, based on quantities stored, manufactured, used in process, sold, transported or otherwise utilized in the form of liquids, solids or gases. *(See Table F.8.1.)*

Table F.8.1 Permit Calculation Tables

Quantity	Ranges
Liquids in Gallons × 3.785 for L	Range
0	0
54	1
500	2
946	3
1,836	4
4,500	5
15,180	6
65,581	7
70,000	8
75,000	9
85,000	10
Solids by Pounds × 0.4536 for kg	Range
0	0
499	1
1,000	2
2,000	3
3,000	4
4,000	5
5,000	6
10,000	7
11,000	8
12,000	9
15,000	10
Gases by Cubic Feet × 0.028 for m^3	Range
0	0
199	1
1,999	2
3,600	3
6,800	4
16,400	5
35,000	6
54,000	7
74,000	8
80,000	9
90,000	10

Annex G Ozone Gas–Generating Equipment

This annex is not a part of the requirements of this NFPA document unless specifically adopted by the jurisdiction.

G.1 Scope. Equipment having a maximum ozone-generating capacity of ½ lb (0.23 kg) or more over a 24-hour period shall be in accordance with this annex.

Exception: Ozone-generating equipment used in one- and two-family dwellings and lodging and rooming house occupancies.

G.2 Definitions. For the purpose of this annex, certain terms are defined as follows.

G.2.1 Ozone Generator. Equipment that causes the production of ozone.

G.3 Standards. The following standard is intended for use as a guide in the design, fabrication, testing and use of equipment regulated by this annex:

Standard 250, *Enclosures for Electrical Equipment*
National Electric Manufacturers Association

G.4 Location.

G.4.1 General. Ozone generators shall be located in approved cabinets or ozone-generator rooms in accordance with Section G.4.

Exception: A generator within an approved pressure vessel need not be in a cabinet or ozone-generator room when located outside of buildings.

G.4.2 Cabinets. Ozone cabinets shall be constructed of approved materials compatible with ozone in accordance with nationally recognized standards. Cabinets shall display an approved sign stating: OZONE GAS GENERATOR — HIGHLY TOXIC — OXIDIZER. *(See Section G.3.)*

Cabinets shall be braced for seismic activity in accordance with the building code. Cabinets shall be mechanically ventilated with a minimum of six air changes per hour. Exhausted air shall be directed to a treatment system designed to reduce the discharge concentration of the gas to one half of the IDLH value at the point of discharge to the atmosphere. The average velocity of ventilation at makeup air openings with cabinet doors closed shall not be less than 200 ft per minute (1.02 m/s).

G.4.3 Ozone-Generator Rooms. Ozone-generator rooms shall be mechanically ventilated with a minimum of six air changes per hour. Exhausted air shall be directed to a treatment system designed to reduce the discharge concentration of gas to one half of the IDLH value at the point of discharge to the atmosphere, or ozone-generator rooms shall be equipped with a continuous gas detection system that will shut off the generator and sound a local alarm when concentrations above the permissible exposure limit occur. Ozone-generator rooms shall not normally be occupied, and such rooms shall be kept free of combustible and hazardous material storage. Room access doors shall display an approved sign stating: OZONE GAS GENERATOR — HIGHLY TOXIC — OXIDIZER.

G.5 Piping, Valves, and Fittings.

G.5.1 General. Piping, valves, fittings and related components used to convey ozone shall be in accordance with Section G.5.

G.5.2 Secondary Containment. Secondary containment, such as double-walled piping or exhausted enclosures, shall be provided for piping, valves, fittings, and related components. Secondary containment shall be capable of directing a sudden release to an approved treatment system.

Exception: Welded stainless steel piping and tubing.

G.5.3 Materials. Materials shall be compatible with ozone and shall be rated for the design operating pressures.

G.5.4 Identification. Piping shall be identified: OZONE GAS — HIGHLY TOXIC — OXIDIZER.

G.6 Automatic Shutdown. Ozone generators shall be designed to automatically shut down when any one of the following occurs:

(1) The dissolved ozone concentration in the water being treated is above saturation when measured at the point where the water is exposed to the atmosphere
(2) The process using generated ozone is shut down
(3) The ventilation system for the cabinet or ozone-generator room fails
(4) The gas detection system fails

G.7 Manual Shutdown. Manual shutdown controls shall be provided at the generator and, if in a room, within 10 ft (3 m) of the main exit or exit-access door.

Annex H Fire Flow Requirements for Buildings

This annex is not a part of the requirements of this NFPA document unless specifically adopted by the jurisdiction.

H.1 Scope. The procedure determining fire flow requirements for buildings or portions of buildings hereafter constructed shall be in accordance with Annex H. Annex H does not apply to structures other than buildings.

H.2 Definitions. For the purpose of Annex H, certain terms are defined as follows.

H.2.1 Fire Area. The floor area, in square feet, used to determine the required fire flow.

H.2.2 Fire Flow. The flow rate of a water supply, measured at 20 psi (137.9 kPa) residual pressure, that is available for fire fighting.

H.3 Modifications.

H.3.1 Decreases. Fire flow requirements shall be permitted to be modified downward by the AHJ for isolated buildings or a group of buildings in rural areas or small communities where the development of full fire flow requirements is impractical.

H.3.2 Increases. Fire flow shall be permitted to be modified upward by the AHJ where conditions indicate an unusual susceptibility to group fires or conflagrations. An upward modification shall not be more than twice that required for the building under consideration.

H.4 Fire Area.

H.4.1 General. The fire area shall be the total floor area of all floor levels except as modified in Section H.4.

H.4.2 Area Separation. Portions of buildings that are separated by one or more 4-hour fire walls constructed in accordance with the building code, without openings and provided with a 30 in. (76 cm) parapet, are allowed to be considered as separate fire areas.

H.4.3 Type I (443), Type I (332), and Type II (222) Construction. The fire area of buildings constructed of Type I (443), Type I (332), and Type II (222) construction shall be the area of the three largest successive floors.

H.5 Fire Flow Requirements for Buildings.

H.5.1 One- and Two-Family Dwellings. The minimum fire flow and flow duration requirements for one- and two-family dwellings having a fire area that does not exceed 3600 ft^2 (334.5 m^2) shall be 1000 gpm (3785 L/min) for 1 hour. Fire flow and flow duration for dwellings having a fire area in excess of 3600 ft^2 (334.5 m^2) shall not be less than that specified in Table H.5.1.

Exception: A reduction in required fire flow of 50 percent, as approved, shall be permitted when the building is provided with an approved automatic sprinkler system.

H.5.2 Buildings Other Than One- and Two-Family Dwellings. The minimum fire flow and flow duration for buildings other than one- and two-family dwellings shall be as specified in Table H.5.1.

H.5.2.1 A reduction in required fire flow of up to 75 percent, as approved, shall be permitted when the building is protected throughout by an approved automatic sprinkler system. The resulting fire flow shall not be less than 1000 gpm (3785 L/min.).

H.5.2.2 A reduction in required fire flow of up to 75 percent, as approved, shall be permitted when the building is protected throughout by an approved automatic sprinkler system, which utilizes quick response sprinklers throughout. The resulting fire flow shall not be less than 600 gpm (2270 L/min).

Table H.5.1 Minimum Required Fire Flow and Flow Duration for Buildings

Fire Area ft² (×0.0929 for m²)					Fire Flow gpm[2] (× 3.785 for L/min)	Flow Duration (hours)
I(443),I(332), II(222)[1]	II(111), III(211)[1]	IV(2HH), V(111)[1]	II(000), III(200)[1]	V(000)[1]		
0–22,700	0–12,700	0–8,200	0–5,900	0–3,600	1,500	2
22,701–30,200	12,701–17,000	8,201–10,900	5,901–7,900	3,601–4,800	1,750	
30,201–38,700	17,001–21,800	10,901–12,900	7,901–9,800	4,801–6,200	2,000	
38,701–48,300	21,801–24,200	12,901–17,400	9,801–12,600	6,201–7,700	2,250	
48,301–59,000	24,201–33,200	17,401–21,300	12,601–15,400	7,701–9,400	2,500	
59,001–70,900	33,201–39,700	21,301–25,500	15,401–18,400	9,401–11,300	2,750	
70,901–83,700	39,701–47,100	25,501–30,100	18,401–21,800	11,301–13,400	3,000	3
83,701–97,700	47,101–54,900	30,101–35,200	21,801–25,900	13,401–15,600	3,250	
97,701–112,700	54,901–63,400	35,201–40,600	25,901–29,300	15,601–18,000	3,500	
112,701–128,700	63,401–72,400	40,601–46,400	29,301–33,500	18,001–20,600	3,750	
128,701–145,900	72,401–82,100	46,401–52,500	33,501–37,900	20,601–23,300	4,000	4
145,901–164,200	82,101–92,400	52,501–59,100	37,901–42,700	23,301–26,300	4,250	
164,201–183,400	92,401–103,100	59,101–66,000	42,701–47,700	26,301–29,300	4,500	
183,401–203,700	103,101–114,600	66,001–73,300	47,701–53,000	29,301–32,600	4,750	
203,701–225,200	114,601–126,700	73,301–81,100	53,001–58,600	32,601–36,000	5,000	
225,201–247,700	126,701–139,400	81,101–89,200	58,601–65,400	36,001–39,600	5,250	
247,701–271,200	139,401–152,600	89,201–97,700	65,401–70,600	39,601–43,400	5,500	
271,201–295,900	152,601–166,500	97,701–106,500	70,601–77,000	43,401–47,400	5,750	
295,901–Greater	166,501–Greater	106,501–115,800	77,001–83,700	47,401–51,500	6,000	
295,901–Greater	166,501–Greater	115,801–125,500	83,701–90,600	51,501–55,700	6,250	
295,901–Greater	166,501–Greater	125,501–135,500	90,601–97,900	55,701–60,200	6,500	
295,901–Greater	166,501–Greater	135,501–145,800	97,901–106,800	60,201–64,800	6,750	
295,901–Greater	166,501–Greater	145,801–156,700	106,801–113,200	64,801–69,600	7,000	
295,901–Greater	166,501–Greater	156,701–167,900	113,201–121,300	69,601–74,600	7,250	
295,901–Greater	166,501–Greater	167,901–179,400	121,301–129,600	74,601–79,800	7,500	
295,901–Greater	166,501–Greater	179,401–191,400	129,601–138,300	79,801–85,100	7,750	
295,901–Greater	166,501–Greater	191,401–Greater	128,301–Greater	85,101–Greater	8,000	

[1] Types of construction are based on NFPA 220.
[2] Measured at 20 psi (139.9 kPa).

Annex I Fire Hydrant Locations and Distribution

This annex is not a part of the requirements of this NFPA document unless specifically adopted by the jurisdiction.

I.1 Scope. Fire hydrants shall be provided in accordance with Annex I for the protection of buildings, or portions of buildings, hereafter constructed.

I.2 Location. Fire hydrants shall be provided along required fire apparatus access roads and adjacent public streets.

I.3 Number of Fire Hydrants. The minimum number of fire hydrants available to a building shall not be less than that listed in Table I.3. The number of fire hydrants available to a complex or subdivision shall not be less than that determined by spacing requirements listed in Table I.3 when applied to fire apparatus access roads and perimeter public streets from which fire operations could be conducted.

I.4 Consideration of Existing Fire Hydrants. Existing fire hydrants on public streets shall be permitted to be considered as available. Existing fire hydrants on adjacent properties shall not be considered available unless fire apparatus access roads extend between properties and easements are established to prevent obstruction of such roads.

I.5 Distribution of Fire Hydrants. The average spacing between fire hydrants shall not exceed that listed in Table I.3.

Exception: The AHJ shall be permitted to accept a deficiency of up to 10 percent where existing fire hydrants provide all or a portion of the required fire hydrant service. Regardless of the average spacing, fire hydrants shall be located such that all points on streets and access roads adjacent to a building are within the distances listed in Table I.3.

Table I.3 Number and Distribution of Fire Hydrants

Fire Flow Requirements		Number and Distribution of Fire Hydrants			Maximum Distance from Any Point on Street or Road Frontage to a Hydrant[4]	
		Minimum Number of Hydrants	Average Spacing Between Hydrants[1,2,3]			
gpm	Lpm		ft	m	ft	m
1750 or less	6650 or less	1	500	152	250	76
2000–2250	7600–8550	2	450	137	225	69
2500	9500	3	450	137	225	69
3000	11,400	3	400	122	225	69
3500–4000	13,300–15,200	4	350	107	210	64
4500–5000	17,100–19,000	5	300	91	180	55
5500	20,900	6	300	91	180	55
6000	22,800	6	250	76	150	46
6500–7000	24,700–26,500	7	250	76	150	46
7500 or more	28,500 or more	8 or more[5]	200	61	120	37

Note: 1 gpm = 3.8 L/min; 1 ft = 0.3 m.

[1] Reduce by 100 ft (30.5 m) for dead-end streets or roads.

[2] Where streets are provided with median dividers that can be crossed by fire fighters pulling hose lines, or arterial streets are provided with four or more traffic lanes and have a traffic count of more than 30,000 vehicles per day, hydrant spacing shall average 500 ft (152.4 m) on each side of the street and be arranged on an alternating basis up to a fire flow requirement of 7000 gpm (26,500 L/min) and 400 ft (122 m) or higher fire flow requirements.

[3] Where new water mains are extended along streets where hydrants are not needed for protection of structures or similar fire problems, fire hydrants shall be provided at spacing not to exceed 1000 ft (305 m) to provide for transportation hazards.

[4] Reduce by 50 ft (15.2 m) for dead-end streets or roads.

[5] One hydrant for each 1000 gpm (3785 L/min) or fraction thereof.

Annex J Protection of Outdoor Storage

This annex is not a part of the requirements of this NFPA document but is included for informational purposes only.

J.1 General.

J.1.1 The hazards of exposure to outdoor storage from ignition sources and exposing fires and the infinite variety of conditions under which such exposures can occur render impossible the formulation of any single table, formula, or set of rules that can cover all conditions adequately.

J.1.2 Recommendations contained in this annex are for the protection of outdoor storage of commodities covered by the standard. *[See Section 20.15, Chapter 33 (Outside Storage of Tires), and Chapter 34 (General Storage).]*

J.1.3 In general, the provision of automatic fire protection is impractical for outdoor storage. As a result, emphasis needs to be placed upon the following:

(1) Control of potential ignition sources, such as from exposing buildings, transformers, yard equipment, refuse burners, overhead power lines, and vandals
(2) Elimination of adverse factors such as trash accumulations, weeds, and brush
(3) Provision of favorable physical conditions, such as limited pile sizes, low storage heights, wide aisles, and possible use of fire-retardant covers (e.g., tarpaulins)
(4) Rapid and effective application of manual fire-fighting efforts by the provision of fire alarms, strategically located hydrants, and adequate hose houses or hose reels

J.1.4 Outdoor storage should be avoided in most cases but is recognized as a necessity in many industries.

J.1.4.1 Outdoor storage is acceptable for materials that are as follows:

(1) Of low fire hazard, not requiring protection even if located indoors
(2) Of sufficiently low value that a potential loss would not justify the utilization of building space
(3) Of such severe fire hazard that indoor protection is impractical when balanced against potential loss
(4) Of large volume and bulk, making it impractical to construct and protect a building to house the storage

J.1.4.2 Where materials that normally would be stored in buildings are stored outdoors in temporary emergencies, it is recommended that special precautions be taken for their safeguard and that they be moved to a storage warehouse as soon as possible.

J.1.5 Standards that address outdoor storage of specific commodities are found in Chapter 2.

J.2 Responsibility of Management.

J.2.1 It is the responsibility of management to properly consider the hazards of the various materials handled. Protection requirements and storage arrangements vary with the combustibility of the materials. Management should determine any special precautions that should be followed for the types of material stored. The care, cleanliness, and maintenance exercised by management determine to a large extent the relative fire safety in the storage area.

J.2.2 Consideration should be given by management to proper storage of materials in order to prevent the undue concentration of quantities of such materials in a single location, subject to one catastrophe. The criteria used to determine the amount of such material that should be stored in a single location are not only dependent upon the dollar value of the commodity but also upon the total supply and availability of the material. The impact of the loss of the storage upon the ability to continue production should be considered.

J.3 Site.

J.3.1 In selecting a site for outdoor storage, preference should be given to a location that can provide the following:

(1) Adequate municipal fire and police protection
(2) Adequate public water system with hydrants suitably located for protection of the storage
(3) Adequate all-weather roads for fire department apparatus access for response
(4) Sufficient clear space from buildings or from other combustible storage that constitutes an exposure hazard
(5) Absence of flood hazard
(6) Adequate clearance space between storage piles and any highways, bridges, railroads, and woodlands
(7) Topography as level as possible to provide storage stability
(8) Adequate clearance between the storage of combustible materials and pipelines, pipe bridges, cable trays and electrical transmission lines.

J.3.2 The entire site should be surrounded by a fence or other suitable means to prevent access of unauthorized persons. An adequate number of gates should be provided in the surrounding fence or other barriers to permit ready access of fire apparatus.

J.4 Material Piling.

J.4.1 Materials should be stored in unit piles as low in height and small in area as is consistent with good practice for the materials stored. The maximum height should be determined by the stability of pile, effective reach of hose streams, combustibility of the commodity, and ease of pile breakdown under fire or mop-up conditions. Long narrow piles are preferred over large square piles to facilitate manual fire fighting. (The short dimension increases the effectiveness of hose streams and eases pile breakdown.)

J.4.2 Aisles should be maintained between individual piles, between piles and buildings, and between piles and the boundary line of the storage site. Sufficient driveways having the width of at least 15 ft (4.6 m) should be provided to allow the travel of fire equipment to all portions of the storage area. Aisles should be at least twice the pile height to reduce the spread of fire from pile to pile and to allow ready access for fire fighting, emergency removal of material, or salvage purposes.

J.4.3 As the commodity class increases in combustibility or where storage could be ignited easily from radiation, wider aisles should be provided. Smaller unit piles could be an alternative to wider aisles if yard space is limited.

J.4.4 For outdoor idle pallet storage, see Section 34.10.

J.4.5 Boundary posts with signs designating piling limits should be provided to indicate yard area, roadway, and aisle limits.

J.5 Buildings and Other Structures.

J.5.1 Yard storage, particularly storage of commodities in the higher heat release category, should have as much separation as is practical from important buildings and structures, but

not less than that offered by NFPA 80A, *Recommended Practice for Protection of Buildings from Exterior Fire Exposures.*

J.5.1.1 As guidance in using NFPA 80A to establish clear spaces, the following classification of severity with commodity classes of this standard should be used on the basis of 100 percent openings representing yard storage:

(1) Light severity — Commodity Class I
(2) Moderate severity — Commodity Class II
(3) Interpolate between moderate and severe severity for Commodity Class III
(4) Severe severity — Commodity Class IV and Class A plastics

The guidelines of J.5.1.1 apply to the equivalent commodity classes of this standard. The severity of the exposing building or structure also should be a consideration where establishing a clear space.

J.6 Yard Maintenance and Operations.

J.6.1 The entire storage site should be kept free from accumulation of unnecessary combustible materials. Vegetation should be kept cut low. Procedures should be provided for weed control and the periodic cleanup of the yard area.

J.6.2 Adequate lighting should be provided to allow supervision of all parts of the storage area at night.

J.6.3 All electrical equipment and installations should conform to the provisions of NFPA 70.

J.6.4 No heating equipment should be located or used within the storage area. Salamanders, braziers, portable heaters, and other open fires should not be used.

J.6.5 Smoking should be prohibited, except in locations prominently designated as smoking areas. "No Smoking" signs should be posted in prohibited areas.

J.6.6 Welding and cutting operations should be prohibited in the storage area, unless in compliance with NFPA 51B, *Standard for Fire Prevention During Welding, Cutting, and Other Hot Work.*

J.6.7 Tarpaulins used for protection of storage against the weather should be of fire-retardant fabric.

J.6.8 Locomotives from which glowing particles could be emitted from exhaust stacks should not be permitted in the yard.

J.6.9 Motorized vehicles using gasoline, diesel fuel, or liquefied petroleum gas as fuel should be garaged in a separate, detached building.

J.6.9.1 Storage and handling of fuel should conform with Chapters 66 and 69.

J.6.9.2 Repair operations should be conducted outside the yard unless a separate masonry wall building is provided. Vehicles should not be greased, repaired, painted, or otherwise serviced in the yard. Such work should be conducted in conformity with Chapter 42.

J.7 Fire Protection.

J.7.1 Provisions should be made for promptly notifying the public fire department and private fire brigade (if available) in case of fire or other emergency.

J.7.2 Hydrants should be spaced to provide a sufficient number of hose streams. *(See Section 13.5.)*

J.7.2.1 Provisions should be made to permit the direction of an adequate number of hose streams on any pile or portion of the storage area that could be involved in fire. It is recommended that, unless adequate protection is provided by the municipal fire department, sufficient hose and other equipment should be kept on hand at the storage property, suitably housed, and provision should be made for trained personnel available to put it into operation.

J.7.2.2 Hydrants and all fire-fighting equipment should be accessible for use at all times. No temporary storage should be allowed to obstruct access to fire-fighting equipment, and any accumulation of snow or obstructing material should be removed promptly.

J.7.3 Monitor nozzles should be provided at strategic points where large quantities of highly combustible materials are stored or where average amounts of combustible materials are stored in inaccessible locations.

J.7.4 Fire extinguishers of an appropriate type should be placed at well-marked strategic points throughout the storage area so that one or more portable fire extinguisher units can quickly be made available for use at any point. Where the climate is such that there is a danger of freezing, suitable extinguishers for freezing temperatures should be used. For guidance in the type and use of extinguishers, refer to Section 13.6.

J.8 Guard Service.

J.8.1 Guard service should be provided and continuously maintained throughout the yard and storage area at all times while the yard is otherwise unoccupied. The responsibilities and the training of guards should be as specified in NFPA 601, *Standard for Security Services in Fire Loss Prevention.* It is recommended that there be some suitable means of supervising guard activities to ensure that required rounds are made at regular intervals.

J.8.2 The value of strategically placed watchtowers in large yards where a guard stationed at an advantage point can keep the entire property under observation should be considered. It is recommended that such watchtowers be connected to the alarm system for prompt notification of fire.

Annex K Explanation of Rack Storage Test Data and Procedures

This annex is not a part of the requirements of this NFPA document but is included for informational purposes only.

K.1 General. Annex K provides an explanation of the test data and procedures that led to the development of the protection for rack storage and roll paper storage.

K.2 Some of the rack storage fire tests that were conducted as a part of this program to develop protection criteria were run with eave-line windows or louvers open to simulate smoke and heat venting. These tests opened 87.5 percent and 91 percent more sprinklers than did comparative tests without windows or louvers open. Results from these tests might or might not provide an indication as to how smoke and heat vents installed in the roof of a building would affect the operation of automatic sprinklers.

K.3 Rack Fire Test 85 was conducted to evaluate the results of a liquid spill fire. Test results indicate it is not practical from an economic standpoint to install sprinkler systems with densities

capable of controlling such a fire, and, therefore, industrial trucks should be fueled outside of buildings only.

K.4 Chapter 5 from NFPA 13 uses as a basis the large-scale fire test series conducted at the Factory Mutual Research Center, West Glocester, RI.

The test building was approximately 200 ft × 250 ft (61 m × 76 m) [50,000 ft^2 (4.65 km^2) in area], of fire-resistive construction, and contained a volume of approximately 2.25 million ft^3 (63,761.86 m^3), the equivalent of a 100,000 ft^2 (9.29 km^2) building 22½ ft (6.86 m) high. The test building had two primary heights beneath a single large ceiling. The east section was 30 ft (9.1 m) high, and the west section was 60 ft (18.29 m) high.

The test series for storage height of 20 ft (6.1 m) was conducted in the 30 ft (9.1 m) section with clearances from the top of storage to the ceiling nominally 10 ft (3.1 m). Doors at the lower and intermediate levels and ventilation louvers at the tops of walls were kept closed during the majority of the fire tests, which minimized the effect of exterior conditions. The entire test series was fully instrumented with thermocouples attached to rack members, simulated building columns, bar joists, and the ceiling.

Racks were constructed of steel vertical and horizontal members designed for 4000 lb (1814 kg) loads. Vertical members were 8 ft (2.44 m) on center (O.C.) for conventional racks and 4 ft (1.22 m) O.C. for simulated automated racks. Racks were 3½ ft (1.07 m) wide with 6 in. (152.4 mm) longitudinal flue space for an overall width of 7½ ft (2.29 m). Simulated automated racks and slave pallets were used in the main central rack in the 4 ft (1.22 m) aisle tests. Conventional racks and conventional pallets were used in the main central rack in the 8 ft (2.44 m) aisle tests. The majority of the tests were conducted with 100 ft^2 (9.29 m^2) sprinkler spacing.

The test configuration for storage heights of 15 ft (4.6 m), 20 ft (6.1 m), and 25 ft (7.6 m) covered an 1800 ft^2 (167.2 m^2) floor area, including aisles between racks. Tests that were used in producing this standard limited fire damage to this area. The maximum water damage area anticipated in the standard is 6000 ft^2 (557.4 m^2) — the upper limit of the design curves.

The test data shows that, as density is increased, both the extent of fire damage and sprinkler operation are reduced. The data also indicates that, with sprinklers installed in the racks, a reduction is gained in the area of fire damage and sprinkler operations (i.e., water damage).

Table K.4 illustrates these points. The information is taken from the test series for storage height of 20 ft (6.1 m) using the standard commodity.

The fact that there is a reduction in both fire damage and area of water application as sprinkler densities are increased or where sprinklers are installed in racks should be considered carefully by those responsible for applying this standard to the rack storage situation.

In the test for storage height of 25 ft (7.6 m), a density of 0.55 gpm/ft^2 [(22.4 L/min)/m^2] produced 42 percent, or 756 ft^2 (70.26 m^2), fire damage in the test array and a sprinkler-wetted area of 1400 ft^2 (130.1 m^2). Lesser densities would not be expected to achieve the same limited degree of control. Therefore, if the goal of smaller areas of fire damage is to be achieved, sprinklers in racks should be considered.

The test series for storage height over 25 ft (7.6 m) was conducted in the 60 ft (18.29 m) section of the test building with nominal clearances from the top of storage to the ceiling of either 30 ft (9.1 m) or 10 ft (3.1 m).

Doors at the lower and intermediate levels and ventilation louvers at the top of walls were kept closed during the fire tests. This minimized the effect of exterior wind conditions.

The purpose of the over 25 ft (7.6 m) series was to accomplish the following:

(1) Determine the arrangement of in-rack sprinklers that can be repeated as pile height increases and that provide control of the fire
(2) Determine other protective arrangements, such as high-expansion foam, that provide control of the fire

Table K.4 Summary of Fire Test Data

Density		Fire Damage in Test Array			Sprinkler Operation 165°F (74°C) Area	
gpm/ft^2	Lpm/m^2	Percent	ft^2	m^2	ft^2	m^2
0.30 (ceiling only)	1.14 (ceiling only)	22	395	37	4,500–4,800	418–446
0.375 (ceiling only)	1.4 (ceiling only)	17	306	28	1,800	167
0.45 (ceiling only)	1.7 (ceiling only)	9	162	15	700	65
0.20 (ceiling only)	0.76 (ceiling only)	28–36	504–648	47–60	13,100–14,000	1219–1300
0.20 (sprinklers at ceiling and in racks)	0.76 (sprinklers at ceiling and in racks)	8	144	13	4,100	380
0.30 (sprinklers at ceiling and in racks)	1.14 (sprinklers at ceiling and in racks)	7	126	12	700	65

Note: For SI units, 1 ft = 0.3048 m; °C = ⅝ (°F − 32); 1 gpm/ft^2 = 40.746 (L/min)/m^2.

Control was considered to have been accomplished if the fire was unlikely to spread from the rack of origin to adjacent racks or spread beyond the length of the 25 ft (7.6 m) test rack. To aid in this judgment, control was considered to have been achieved if the fire did not do the following:

(1) Jump the 4 ft (1.22 m) aisles to adjoining racks
(2) Reach the end face of the end stacks (north or south ends) of the main rack

Control is defined as holding the fire in check through the extinguishing system until the commodities initially involved are consumed or until the fire is extinguished by the extinguishing system or manual aid.

The standard commodity as selected in the 20 ft (6.1 m) test series was used in the majority of over 25 ft (7.6 m) tests. Hallmark products and 3-M products described in the 20 ft (6.1 m) test series report also were used as representative of Class III or IV commodities, or both, in several tests. The results of privately sponsored tests on Hallmark products and plastic-encapsulated standard commodities also were made available to the NFPA Technical Committee on General Storage.

A 25 ft (7.6 m) long test array was used for the majority of the over 25 ft (7.6 m) high test series. The decision to use such an array was made because it was believed that a fire in racks over 25 ft (7.6 m) high that extended the full length of a 50 ft (15.24 m) long rack could not be considered controlled, particularly as storage heights increased.

One of the purposes of the tests was to determine arrangements of in-rack sprinklers that can be repeated as pile height increases and that provide control of the fire. The tests for storage height of 30 ft (9.1 m) explored the effect of such arrays. Many of these tests, however, produced appreciable fire spread in storage in tiers above the top level of protection within the racks. (In some cases, a total burnout of the top tiers of both the main rack and the target rack occurred.) In the case of the 30 ft (9.1 m) Hallmark Test 134 on the 60 ft (18.3 m) site, the material in the top tiers of storage burned vigorously, and the fire jumped the aisle above the fourth tier. The fire then burned downward into the south end of the fourth tier. In the test on the floor, a nominal 30 ft (9.1 m) clearance occurred between the top of storage and the ceiling sprinklers, whereas on the platform this clearance was reduced to nominal 10 ft (3.1 m). In most cases, the in-rack sprinklers were effective in controlling fire below the top level of protection within the racks. It was assumed by the Test Planning Committee that, in an actual case with a clearance of 10 ft (3.1 m) or less above storage, ceiling sprinklers would be expected to control damage above the top level of protection within the racks. Tests have been planned to investigate lesser clearances.

Tests 114 and 128 explored the effect of changing the ignition point from the in-rack standard ignition point to a face ignition location. It should be noted, however, that both of these tests were conducted with 30 ft (9.1 m) clearance from the ceiling sprinklers to the top of storage and, as such, ceiling sprinklers had little effect on the fire in the top two tiers of storage. Fire spread in the three lower tiers was essentially the same. A similar change in the fire spread where the ignition point is changed was noted in Tests 126 and 127. Once again, 30 ft (9.1 m) clearance occurred between the top of storage and the ceiling sprinklers, and, as such, the ceiling sprinklers had little effect on the face fire. Comparisons of Tests 129, 130, and 131 in the test series for storage height of 50 ft (15.24 m) indicated little effect of point of ignition in the particular configuration tested.

Test 125, when compared with Test 133, indicated no significant difference in result between approved low profile sprinklers and standard sprinklers in the racks.

K.4.1 None of the tests that were conducted with densities in accordance with the design curves produced critical temperatures in bar joists 12½ ft (3.81 m) from the ignition source. Therefore, with sprinkler systems designed in accordance with the curves, fireproofing of roof steel should not be necessary.

K.4.2 Temperatures in the test column were maintained below 1000°F (538°C) in all tests where sprinklers in racks were used.

K.4.3 Temperatures in the test column were maintained below 1000°F (538°C) with densities, of roof ceiling sprinklers only, of 0.375 gpm/ft^2 (15.3 mm/min) with 8 ft (2.44 m) aisles and 0.45 gpm/ft^2 (18.34 mm/min) with 4 ft (1.22 m) aisles using the standard commodity.

K.5 This annex provides a summary of the data developed from the tissue test series of full-scale roll paper tests conducted at the Factory Mutual Research Center, West Glocester, RI.

The test building was approximately 50,000 ft^2 (4.65 km^2) (200 ft × 250 ft) in area, of fire-resistive construction, and contained a volume of approximately 2.25 million ft^3 (63,761.86 m^3), the equivalent of a 100,000 ft^2(9.29 km^2) building 22.5 ft (6.86 m) high. The test building had two primary heights beneath a single large ceiling. The east section was 30 ft (9.1 m) high, and the west section was 60 ft (18.29 m) high.

The tissue test series was conducted in the 30 ft (9.1 m) section with clearances from the top of storage to the ceiling nominally 10 ft (3.1 m).

Figure K.5 illustrates a typical storage array used in the tissue series of tests.

The basic criteria used in judging test failure included one or more of the following:

(1) Firespread to the north end of the storage array

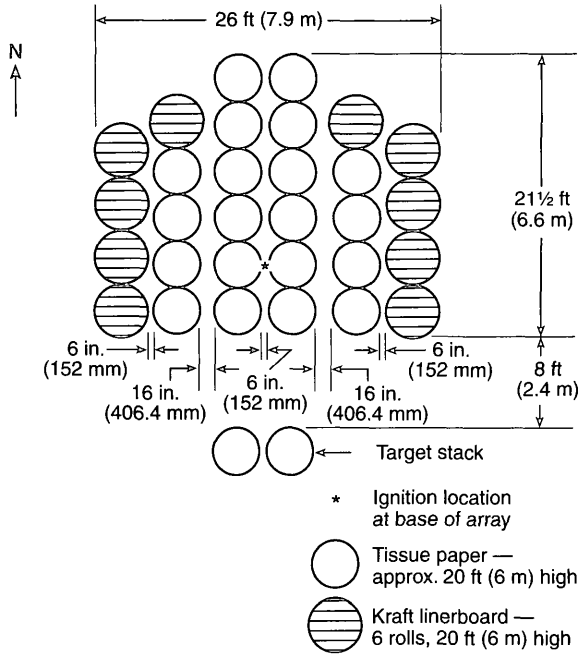

FIGURE K.5 Plan View of Typical Tissue Storage Array.

(2) Gas temperatures near the ceiling maintained at high levels for a time judged to be sufficient to endanger exposed structural steel
(3) Fire reaching the target stacks

Table K.5 outlines the tissue test results.

Fire tests have been conducted on 20 ft (6.1 m) and 25 ft (7.6 m) high vertical storage of tissue with 10 ft (3.1 m) and 5 ft (1.5 m) clear space to ceiling in piles extending up to seven columns in one direction and six columns in the other direction. In these tests, target columns of tissue were located directly across a 8 ft (2.4 m) aisle from the main pile. Three tests were conducted using 17⁄32 in.(13.5 mm) 286°F (141°C) high temperature sprinklers on a 100 ft^2 (9.3 m^2) spacing and at constant pressures of 14 psi, 60 psi, and 95 psi (97 kPa, 414 kPa, and 655 kPa), respectively. One test was run using 0.64 in. (16.3 mm) 286°F (141°C) high temperature sprinklers on a 100 ft^2 (9.3 m^2) spacing at a constant pressure of 50 psi (345 kPa). Two tests were conducted following a scheduled decay from an initial pressure of 138 psi (952 kPa) to a design point of 59 psi (407 kPa) if 40 sprinklers opened.

The significant characteristic of these fire tests was the rapid initial fire spread across the surface of the rolls. Ceiling temperatures were controlled during the decaying pressure tests and during the higher constant pressure tests. With the exception of the 20 ft (6.1 m) high decaying pressure test, the extent of fire spread within the pile could not be clearly established. Aisle jump was experienced, except at the 95 psi (655 kPa) constant pressure, 20 ft (6.1 m) high decaying pressure, and large drop test. Water absorption and pile instability caused pile collapse in all tests. This characteristic should be considered where manually attacking a fire in tissue storage occupancies.

Available fire experience in roll tissue storage occupancies does not correlate well with the constant pressure full-scale fire tests with respect to the number of sprinklers operating and the extent of fire spread. Better correlation is noted with the decaying pressure tests. Thirteen fires reported in storage occupancies with storage piles ranging from 10 ft to 20 ft (3.1 m to 6.1 m) high and protected by wet-pipe sprinkler systems ranging from ordinary hazard design densities to design densities of 0.6 gpm/ft^2 (24.5 mm/min) were controlled with an average of 17 sprinkler heads. The maximum number of wet-pipe sprinkler heads that opened was 45 and the minimum number was 5, versus 88 and 26, respectively, in the constant pressure tests. Seventeen sprinkler heads opened in the 20 ft

Table K.5 Summary of Roll Paper Tissue Tests

Test Number	B1[a]	B2	B3	B4	B5[b]	B6[b]
Test date	10/4/79	7/23/80	7/30/80	10/15/80	7/28/82	8/5/82
Paper type	Tissue	Tissue	Tissue	Tissue	Tissue	Tissue
Stack height [ft-in. (m)]	21-10 (6.66)	20-0 (6.1)	21-8 (6.6)	18-6 (5.64)	19-10 (6.05)	25-3 (7.69)
Paper, banded	No	No	No	No	No	No
Paper, wrapped	No	No	No	No	No	No
Fuel array	Std.	Std.	Std.	Std.	Std.	Std.
Clearance to ceiling [ft-in. (m)]	8-2 (2.49)	10-0 (3.05)	8-4 (2.54)	11-6 (3.51)	5-2 (1.58)	4-9 (1.45)
Clearance to sprinklers [ft-in. (m)]	7-7 (2.31)	9-5 (2.87)	7-9 (2.36)	10-9 (3.28)	4-7 (1.40)	4-2 (1.27)
Sprinkler orifice [ft-in. (mm)]	17⁄32 (13.5)	17⁄32 (13.5)	17⁄32 (13.5)	0.64 (16.33)	17⁄32 (13.5)	17⁄32 (13.5)
Sprinkler temp. rating [°F (°C)]	280 (138)	280 (138)	280 (138)	280 (138)	280 (138)	280 (138)
Sprinkler spacing [ft × ft (m × m)]	10 × 10 (3.05 × 3.05)	10 × 10 (3.05 × 3.05)	10 × 10 (3.05 × 3.05)	10 × 10 (3.05 × 3.05)	10 × 10 (3.05 × 3.05)	10 × 10 (3.05 × 3.05)
Water pressure [psi (kPa)]	14 (0.67)[c]	60 (2.87)	95 (4.55)	50 (2.39)	138 (6.61) initial 102 (4.88) final	138 (6.61) initial 88 (4.21) final
Moisture content of paper (%)	9.3	9.3	10.2	6.0	8.2	9.2
First sprinkler operation (min:sec)	0:43	0:32	0:38	0:31	0:28	0:22
Total sprinklers open	88	33	26	64	17	29
Final flow [gpm (L/min)]	2575 (9746)[c]	1992 (7540)	1993 (7544)	4907 (18,573)	1363 (5159)	2156 (8161)
Sprinkler demand area [ft^2 (m^2)]	8800 (817.5)	3300 (306.6)	2600 (241.5)	6400 (595)	1700 (158)	2900 (269)
Avg. discharge density [gpm/ft^2 (L/min·m^2)]	0.29 (11.8)[c]	0.60 (24.4)	0.77 (31.4)	—	0.92 (37.5) initial 0.80 (32.6) final	0.96 (39.1) initial 0.74 (30.2) final
Max. 1 minute avg. gas temp. over ignition [°F (°C)]	1680 (916)[c]	1463 (795)	1634 (890)	1519 (826)	[d]	[e]
Duration of high temp. within acceptable limits	No	Yes	Yes	Marginal	Yes	Yes
Max. 1 minute avg. fire plume gas velocity over ignition [ft/sec (m/sec)]	—	40.7 (12.4)	50.2 (15.3)	47.8 (14.6)	—	—
Target ignited	Yes	Yes	No	No	No	Briefly
Extent of fire damage within acceptable limits	No	No	Marginal	Marginal	Yes	Marginal
Test duration (minutes)	17.4	20	20	25.5	45	45

[a] Phase I Test.
[b] Phase III tests decaying pressure.
[c] Pressure increased to 50 psi (345 kPa) at 10 minutes.
[d] Maximum steel temperature over ignition 341°F (172°C).
[e] Maximum steel temperature over ignition 132°F (56°C).

(6.1 m) high decaying pressure test. One actual fire in tissue storage provided with a dry-pipe system opened 143 sprinklers but was reported as controlled.

One fire test was conducted with plastic-wrapped rolls of heavyweight kraft paper. The on-end storage was in a standard configuration, 20 ft (6.1 m) high with 9½ ft (2.9 m) clearance to ceiling sprinklers. The prescribed 0.30 gpm/ft^2 (12.2 mm/min) density controlled the fire spread, but protection to roof steel was marginal to the point where light beams and joists could be expected to distort. A lower moisture content in the paper as a result of the protective plastic wrapping was considered to be the reason for the higher temperatures in this test as compared to a similar test where the rolls were not wrapped.

Annex L Protection of Baled Cotton: History of Guidelines

This annex is not a part of the requirements of this NFPA document but is included for informational purposes only.

L.1 Introduction.

L.1.1 Origin. In the early 1900s, a group of marine underwriters formulated regulations to reduce the frequency of excessive fire loss in baled cotton facilities. In 1916, following a joint conference with the cotton industry, guidelines were established under the title *Specifications and Standards* (also known as *Marine Standards*).

From 1947 through 1969, the sponsorship was through the Cotton Warehouse and Inspection Service (dissolved in 1969). In 1967, interested insurance rating bureaus were added as sponsors, and, in 1969, to prevent conflicts with various rating bureau schedules, the word Standards was replaced with *Recommended Good Practices.* However, since 1939, the booklet was commonly referred to as the *Blue Book.*

Numerous revisions were made over the years to keep current, the last made in 1973. Early in 1978, the committee for the *Blue Book* requested that the NFPA consider a standard on baled cotton storage and handling based on the Blue Book recommended practices. The NFPA Correlating Committee for Storage expanded the scope to include all fibers in baled form, which were covered in NFPA 44, *Storage of Combustible Fibers,* which was withdrawn many years ago. Little data was found on fire experience for baled fibers other than cotton, and that data was largely empirical in nature.

Therefrom, the former NFPA 231E, *Recommended Practice for the Storage of Baled Cotton,* was developed by consensus of a test group formed in 1978 that was made up of the cotton warehousing, cotton processing, and insurance industries, under the auspices of the Technical Committee on General Storage. The recommendations were limited to cotton fiber in baled form with the intent to convert to a standard as field experience became available to further substantiate its content.

In the 1990s, experimental work by the U.S. Department of Agriculture and others (Wakelyn and Hughs, 2002) investigated, for the first time in detail, the flammability of cotton bales. The research showed the following:

(1) That such cotton bales with a packing density of at least 22 lb/ft^3 (360 kg/m^3) (densely packed cotton bales) did not undergo any of the following:
   (a) Self-heating
   (b) Spontaneous combustion
   (c) Sustained smoldering combustion internal to the cotton bale, creating a delayed fire hazard (also known as a fire-packed bale)
(2) That, if the cotton bale density was greater that 14 lb/ft^3 (225 kg/m^3), a smoldering fire inside the bale did not spread but self extinguished in a short time, since air diffusion into the bale was insufficient to sustain combustion.
(3) That, when densely packed cotton bales were exposed to smoldering cigarettes, matches, and open flames (including the gas burner ignition source used for the mattress tests ASTM E 1590, *Standard Test Method for Fire Testing of Mattresses,* and California Technical Bulletin 129, *Flammability Test Procedure for Mattresses for Use in Public Building*), the probability of initiating flaming combustion was at such a low level as not to qualify the densely packed cotton bales as flammable solids.

These investigations resulted in harmonization between the U.S. Department of Transportation (49 CFR 172.102, "Special Provisions," note 137), the United Nations Recommendations on the Transport of Dangerous Goods, the International Maritime Organization (the International Maritime Dangerous Goods Code), and the International Civil Aviation Organization's Technical Instructions, with the removal of the flammable solid designation from densely packed cotton bales, complying with ISO 8115, *Cotton Bales — Dimensions and Density,* and the exemption of such cotton bales from the Hazardous Materials Regulations where the cotton bales have a packing density of at least 22 lb/ft^3 (360 kg/m^3). The limiting density of densely-packed cotton bales was set up with a substantial margin of safety, since a fire-packed bale was never able to be experimentally found in cotton bales compressed to a density greater than 14 lb/ft^3 (225 kg/m^3).

With the merger of a number of general storage standards in 1999, and the incorporation of the information into NFPA 1 UFC (identified as Annex L), the results are shown in this annex as guidance for the user.

L.1.2 Scope.

L.1.2.1 This annex provides fire protection guidance for the storage of baled cotton in buildings and in yards.

L.1.2.2 None of the provisions outlined should be considered mandatory. However, it is recommended that property owners follow these guidelines as a minimum means of limiting fire spread by the application of the storage methods specified, by the separation of major storages using fire walls or clear spaces, and by the provision of an adequate means of extinguishment.

L.1.2.3 These guidelines can be applied to new or existing facilities.

L.1.2.4 There is no intent to restrict new technologies or alternative arrangements that offer protection features superior to those outlined.

L.1.3 General.

L.1.3.1 Cotton fiber, unless stored as densely packed cotton bales, is readily ignitable, burns freely, and when stored in relatively large quantities, poses special fire control problems not generally encountered in other common commodities. Densely packed cotton bales are difficult to ignite and do not burn easily.

Cotton fiber is compressed to various densities into baled form for transport, storage, and handling and is largely covered by industry-accepted packaging materials. The bales are bound by wire bands, polyester plastic strapping or cold rolled high tensile steel strapping, and covered with fully coated or strip-coated woven polypropylene, polyethylene film, or burlap. Uncovered bale surfaces normally are ragged in appearance due to the loose fibrous material not confined by the binding or wrapping. In the past, this ragged appearance was also further aggravated by sampling, which exposed additional fibrous material and could contribute to the rapid spread of fire. This is no longer an issue, as current cotton industry standards (for example, the cotton industry practices established by the Joint Cotton Industry Bale Packaging Committee) require bales to be fully covered and sample holes to be patched, thereby minimizing the presence of exposed cotton.

The storage of cotton bales in relatively large quantities can pose severe fire control problems due to the potential for surface flammability and the large area of involvement that could overcome even a well designed and supplied sprinkler system. Therefore, this annex takes into consideration limits on the number of bales, including densely packed cotton bales, per building or fire division and the size of storage blocks.

Where the bales are tiered or piled in buildings or outdoors, the loose surface fibers are easily ignited in the presence of an ignition source and the fire can spread rapidly over the entire mass or body of the material. Fire then can burrow into the bale interiors, making detection and extinguishment difficult, particularly in large mass storage. A quick, hot fire then can ensue and spread beyond the control of ordinary extinguishing methods. However, it has been shown that fire will not spread rapidly over the surface of densely packed cotton bales (Wakelyn and Hughs, 2002).

In properly arranged storage and with adequate automatic sprinkler protection, fire normally is confined to the pile of origin, although an aisle fire can be expected to involve more than one tier or pile. Sprinklers usually operate beyond the confines of the fire and wet down bales immediately adjacent to the burning pile.

If adequate sprinkler protection is lacking, if tiers or piles are too large or high, if aisle separation is not properly maintained, or if the loosely packed bales are otherwise improperly arranged, damage to the section, building, or area of involvement will be more severe, if not totally destructive.

L.1.3.2 Common causes of fire in baled cotton include, but are not limited to, the following:

(1) Arson or other malicious acts
(2) Fire-packed bales — bales of cotton containing an internal smoldering fire. These bales, normally produced during ginning, might meet the size requirements for densely packed cotton bales, but will not meet the density (or compression) requirements. Therefore, fire-packed bales are low density, underweight bales that could contain an internal smoldering fire.
(3) Extraneous sparks from sources such as vehicle exhausts and incinerators
(4) Miscellaneous sources such as cutting and welding, electrical and mechanical faults, and smoking

L.2 Building Construction.

L.2.1 Construction. Buildings used for the storage of baled cotton that is stored and protected in accordance with these guidelines are permitted to be of any of the types described in NFPA 220, *Standard on Types of Building Construction.*

L.2.2 Emergency Smoke and Heat Venting. The protection outlined in these guidelines applies to buildings with or without roof vents and draft curtains.

L.2.3 Fire Divisions or Clear Spaces Between Buildings.

L.2.3.1 A fire division is a building, compartment, or section cut off by fire walls or separation.

L.2.3.1.1 Fire divisions or clear spaces between buildings should be in accordance with NFPA 80A, *Recommended Practice for Protection of Buildings from Exterior Fire Exposures.*

L.2.3.1.2 Storage of baled cotton, other than densely packed cotton bales, generally has a fire load in excess of 15 lb/ft^2 (73 kg/m^3), which would place its classification, according to NFPA 80A, in the "severe" category.

L.2.3.2 Fire walls should be of masonry and rated for at least 4 hours (based on NFPA 251, *Standard Methods of Tests of Fire Resistance of Building Construction and Materials*; ASTM E 119, *Standard Methods of Fire Tests of Building Construction and Materials*; and UL 263, *Standard for Fire Tests of Building Construction and Materials*). For a complete description of construction Types I, II, III, IV, and V, see NFPA 220. Such walls should be parapeted as follows:

(1) For wood frame [Type V (111-000)] and ordinary or heavy timber masonry [Type III (211-200) and Type IV (2HH)], construction parapets should extend at least 5 ft (1.5 m) above the highest point of any adjacent monitor or roof structure within 50 ft (15 m) of the fire wall. Where the monitors or the roof structure adjoins a fire wall, the parapet should extend not less than 7½ ft (2.3 m) horizontally from the vertical side of the roof structure. If intersecting end or side walls are other than masonry, the fire wall should extend outward 10 ft (3.1 m) beyond the end or side wall or should be "teed" at the ends 10 ft (3.1 m) from each side of the wall or should be "elled" 20 ft (6.1 m) and of an equivalent fire rating.
(2) For noncombustible construction [Type II (000)] other than that outlined in L.2.3.2(3), parapets should be at least 2½ ft (0.75 m) above the roof. If intersecting side walls are other than masonry, such wall construction should conform to the specifications of L.2.3.2(1).
(3) For noncombustible construction [Type II (222-111)] having masonry walls and with roofs of concrete, gypsum, or Class 1 (UL-classified) metal deck, the parapet should extend at least 12 in. (0.3 m) above the roof.
(4) For walls and roofs of fire-resistive construction [Type I (443-332)], parapets are not necessary.

L.2.3.3 Fire walls should be free of openings. Where openings are necessary, the number should be kept to the minimum necessary, and each side should be protected by an approved and listed 3-hour-rated fire door installed in accordance with NFPA 80, *Standard for Fire Doors and Fire Windows.* Doors should be automatic closing with detectors or fusible links installed on both sides of the opening and interconnected so that the operation of any single detector or fusible link closes both doors simultaneously.

L.2.3.4 Substantial guards of a size to protect fire doors from damage or obstruction should be provided.

L.3 Storage Arrangements.

L.3.1 General. This section applies to storage of baled cotton in buildings protected by a sprinkler system in accordance

with Section L.4, or to those not so protected. The tier heights, block sizes, and aisle widths outlined are permitted but represent recommended maximum and minimum limitations. Fire experience and fire tests of high-piled commodities have shown that lower pile heights, smaller block sizes, and wider aisles result in a substantial delay in fire spread and in providing for manual fire fighting. Automatic sprinkler effectiveness is also improved substantially, with a reduction in water demand and a decrease in the quantity of goods damaged. Fire tests with densely packed cotton bales have shown that such products are difficult to ignite and release little heat when ignited.

L.3.2 Storage Blocks.

L.3.2.1 Storage blocks, tiered, untiered, or in racks, should be limited to 25,000 ft^3 (708 m^3) of baled cotton.

L.3.2.2 The height of tiered or rack storage should be limited to a nominal 15 ft (4.6 m). Rack storage, as used in this document, contemplates baled cotton in a skeleton steel pipe or tubular frame, without shelving, and is limited to a single- or double-row configuration not in excess of two bales deep.

L.3.2.3 Rack storage should not extend over aisles or doorways.

L.3.2.4 Racks should not be loaded beyond their design capacity and should be designed for seismic conditions in areas where seismic resistance for buildings is required.

L.3.3 Aisles.

L.3.3.1 Aisles should be provided and maintained to minimize the spread of fire and to allow convenient access for fire fighting, removal of storage, and salvage operations.

L.3.3.2 At least one main aisle, 12 ft (3.7 m) or more in width, should be provided in each fire division and arranged to subdivide the storage into two or more approximately equal areas.

L.3.3.3 Cross aisles separating each storage block should be at least 5 ft (1.5 m) in width. The recommended 5 ft (1.5 m) aisles allow sprinkler water to penetrate the lower areas of storage. An alternative is to construct flash fire barriers consisting of continuous sheets of noncombustible material extending from the floor to a height of at least 1 ft (0.3 m) beyond the top of the piles and projecting not less than 1 ft (0.3 m) beyond the sides of the piles.

L.3.3.4 Cross aisles separating each single- or double-row rack storage configuration should be at least 10 ft (3.1 m) in width.

L.3.3.5 Aisles should be maintained free of loose cotton fibers.

L.3.4 Freshly Ginned Cotton Bales. See L.5.4.

L.3.5 Storage of Commodities Other than Cotton.

L.3.5.1 Cotton warehouses, in general, can be used for the storage of other commodities, subject to the following:

(1) The storage of other commodities in a building is permitted where baled cotton is not stored.
(2) High-hazard commodities, such as nitrates or similar oxidizing materials, flammable liquids or gases, explosives, or materials of a highly combustible nature, should not be permitted where baled cotton is stored in the fire division.
(3) Any commodities that could be hazardous in combination with each other should be stored so that they cannot come in contact with each other.

L.3.5.2 Where it is necessary to store other commodities with storage of baled cotton, a clear space of at least 15 ft (4.6 m) should be maintained between the baled cotton storage and other commodities.

L.3.5.3 Where commodities of different classifications are permitted and stored in the same building, whether on a seasonal or other basis, the protection should be adequate for the most hazardous material. (For protection of other commodities, refer to the main body of this *Code* or to the other applicable NFPA storage standards.)

L.3.6 Clearances.

L.3.6.1 Proper clearances from lights or light fixtures should be maintained to prevent possible ignition. Incandescent light fixtures should have guards to prevent ignition of a commodity from hot bulbs where the possibility of contact exists.

L.3.6.2 No storage should be located within 3 ft (0.9 m) of any electrical switch or panel boards and fuse boxes.

L.3.6.3 Storage of baled cotton and of any other combustibles should be kept at least 4 ft (1.2 m) from fire door openings so that the transmission of fire through a door opening is minimized.

L.3.6.4 At least 2 ft (0.6 m) of clearance should be maintained around all doors (other than as indicated in L.3.6.3), fire protection equipment (including automatic sprinkler risers, controlling valves, hose stations, and portable extinguishers), and telephones for accessibility.

L.3.6.5 A clearance of at least 3 ft (0.9 m) should be maintained between the top of storage and the roof or ceiling construction in order to allow sufficient space for the effective use of hose streams in buildings not equipped with automatic sprinkler protection.

L.4 Fire Protection.

L.4.1 Automatic Sprinkler Systems.

L.4.1.1 Automatic sprinkler protection is not part of the recommendations of this annex. However, it is unfortunate that, in a fire situation, human response is, in most cases, unreliable in the first critical moments of fire development. Sprinkler protection is, therefore, the most reliable method of fire detection and suppression. Property owners are encouraged to provide sprinkler protection as the best means of minimizing a large loss. (See L.3.5 for sprinkler protection for other than cotton fiber storage.)

L.4.1.2 Automatic sprinkler systems, where provided, should be installed in accordance with Section 13.3 where modified by this annex.

L.4.1.3 Clearance between the top of the storage and the sprinkler deflectors should be at least 18 in. (0.45 m). Building heights should allow for proper clearance between the pile height and sprinkler deflectors. Fire tests of high-piled storage have shown that sprinklers are generally more effective if located 1½ ft to 4½ ft (0.45 m to 1.4 m) above the storage height.

L.4.2 Water Supplies.

L.4.2.1 The total water supply available should be sufficient to provide the recommended sprinkler discharge density over the area to be protected, plus a minimum of 500 gpm (2000 L/min) for hose streams.

L.4.2.2 Water supplies should be capable of supplying the total demand required for sprinklers and hose streams to control any potential fire. Further details can be found in Section 13.5.

L.4.2.3 Recommended water supplies contemplate successful sprinkler operation when installed. However, because of the potential for rapid surface flammability and inherent unfavorable features of cotton warehousing of loose cotton fibers, there should be an adequate water supply available for fire department use.

L.4.3 Hydrants. At locations without public hydrants, private hydrants should be provided in accordance with Section 13.5.

L.4.4 Manual Inside Protection.

L.4.4.1 Small Hose. In buildings of 15,000 ft^2 (1380 m^2) or larger, small hose [1½ in. (38 mm)] with combination water spray nozzle should be provided to reach any portion of a storage area with due consideration to access aisle configuration with a maximum length of 100 ft (30 m) of hose. Such small hose should be supplied from one of the following:

(1) Outside hydrants
(2) A separate piping system for small hose stations in accordance with Section 13.2
(3) Valved hose connections on sprinkler risers where such connections are made upstream of the sprinkler control valves
(4) Adjacent sprinkler systems in accordance with Section 13.3

L.4.4.2 Portable Fire Extinguishers. Portable listed fire extinguishers should be provided in accordance with Section 13.6 and as amended by this section. Up to one-half of the required complement of portable fire extinguishers for Class A fires can be omitted in storage areas where fixed small hose lines are installed in accordance with L.4.4.1.

L.4.4.2.1 Cotton and its wrappings represent a Class A fire. Experience has shown that extinguishment using "wet water" — a chemical agent additive to lower the surface tension of water, thus increasing its penetrating and spreading qualities — is the most effective on baled cotton fires. Plain water is effective on surface fires but lacks the penetrating power of wet water.

Dry chemical extinguishers using sodium bicarbonate, potassium bicarbonate, or potassium chloride base powders have been used to control a surface fire on baled fibers and work mainly by coating the fiber with the fire-retardant powder. However, such chemicals do not affect a smoldering or burrowing fire beneath the surface.

L.4.4.2.2 Additional listed extinguishers, suitable for Class B and C fires, or multipurpose types, should be provided at each press location and for each motorized vehicle or area of hazard other than Class A.

L.4.4.3 Wetting Agent Extinguishing Units.

L.4.4.3.1 Pressurized, wheeled, listed, wetting agent extinguishing units, as specified in Section 13.8, can be used subject to the AHJ in lieu of Class A conventional types or small hose lines, provided the following:

(1) The unit(s) has an equivalent extinguishing effectiveness of 20A for each 15,000 ft^2 (1380 m^2) of floor area or less.
(2) The unit(s) has an equivalent extinguishing effectiveness of 40A or more for each 30,000 ft^2 (2760 m^2) of floor area.

L.4.4.3.2 Placement of extinguishing units should be at locations readily accessible to the main aisles and properly protected from damage.

L.4.4.4 Nonfreezing-Type Extinguishers. Extinguishers should be of the nonfreezing type or protected against freezing where necessary.

L.4.5 Alarm Service.

L.4.5.1 Automatic sprinkler systems should have approved central station, local, auxiliary, remote station, or proprietary waterflow supervised alarm service. Local waterflow alarm service is permitted where standard guard service is provided in accordance with NFPA 601, *Standard for Security Services in Fire Loss Prevention.* Alarm service should comply with Section 13.7.

L.4.5.2 Valves should be supervised in accordance with NFPA 13.

L.4.6 Fire Emergency Planning.

L.4.6.1 Arrangements should be made to allow rapid entry into the premises by the municipal fire department, police department, or other authorized personnel in the case of fire or other emergency.

L.4.6.2 Industrial fire brigades, where provided, should be in compliance with NFPA 600, *Standard on Industrial Fire Brigades.*

L.4.6.3 Manual fire-fighting operations should not be considered to be a substitute for sprinkler operation. The sprinkler system should be kept in operation during manual fire-fighting operations until visibility has improved so that the fire can be clearly seen and the extent of fire has been reduced to a mop-up stage. It is essential that charged hose lines be available before venting is started because of a possible increase in fire intensity. When a sprinkler valve is closed, a designated person should remain at the valve so it can be opened promptly if necessary. The water supply for the sprinkler system should be augmented, where possible, and care should be exercised so that the water supply for the sprinkler system is not rendered ineffective by the use of excessive hose streams.

L.4.6.4 Fire departments should be encouraged to make periodic inspections of the property in cooperation with management and personnel for the purposes of loss prevention and pre-fire planning. For further information, see NFPA 13E, *Recommended Practice for Fire Department Operations in Properties Protected by Sprinkler and Standpipe Systems.*

L.4.6.5 A fire watch should be maintained when the sprinkler protection is not in service.

L.5 Yard Storage.

L.5.1 General.

L.5.1.1 This section applies to baled cotton storage yards designated for that purpose. Generally, yards are at or convenient to compression warehouses and gins but can include storage at locations remote from routine operations.

L.5.1.2 This section refers to seed cotton trailers or modules, vehicles, incinerators, and other facilities, or exposures from same, only for the purpose of establishing recommended distances to designated yard storage areas.

L.5.2 Site. Preference should be given to locations having adequate public fire and police protection, adequately supplied fire hydrants for protection of yard areas, good drainage, all-weather roads or driveways for emergency vehicle use, and

remoteness from buildings or other combustible storages or facilities that could constitute an exposure hazard.

L.5.3 Storage Arrangements.

L.5.3.1 Tiered storage is not recommended; however, yard or outdoor storage conditions can necessitate storage methods other than those outlined. The AHJ should be consulted for approval in such cases.

L.5.3.2 Storage should be arranged to provide reasonable fire breaks and ready access for fire fighting.

L.5.3.3 A row of storage should be limited to 100 bales.

L.5.3.4 Maximum storage limitations should be as follows:

(1) Protected block, 10 rows (1000 bales)
(2) Unprotected block, five rows (500 bales)
(3) Protected yard, five protected blocks (5000 bales)
(4) Unprotected yard, five unprotected blocks (2500 bales)
(5) Protected group yard, four protected yards (20,000 bales)
(6) Unprotected group yard, four unprotected yards (10,000 bales)

L.5.3.5 Minimum clear spaces should be as follows:

(1) 10 ft (3.1 m) between parallel rows and 25 ft (7.6 m) between rows arranged end-to-end
(2) 50 ft (15 m) between protected or unprotected blocks
(3) 200 ft (60 m) between protected or unprotected yards
(4) 1000 ft (300 m) between protected or unprotected group yards

L.5.3.6 Rows should be arranged so that prevailing winds blow in the direction of the parallel clear spaces between rows.

L.5.4 Quarantine Yards.

L.5.4.1 Low density cotton bales are highly subject to insidious fires originating from the ginning operation. Such bales are known as fire-packed bales; further details can be found in L.1.3.2. Known or suspect fire-packed bales should be marked as such and kept segregated from other contents or buildings for a period of not less than 5 days (further details can be found in L.7.10. If no fire is detected after that period, the bales then can be handled in the appropriate manner for low density bales.

L.5.4.2 A clear space of at least 100 ft (30 m) from any yard storage and 25 ft (7.6 m) from all buildings should be established as a quarantine area for known or suspect fire-packed bales.

L.5.4.3 Known or suspect fire-packed bales should be separated from each other by at least a 10 ft (3.1 m) clear space.

L.5.5 Unobstructed Clear Space.

L.5.5.1 Except as noted in L.5.5.1 unobstructed clear space to designated yard storage should be maintained as follows:

(1) 100 ft (30 m) to any approved sprinklered building
(2) 200 ft (60 m) to any nonapproved sprinklered or nonsprinklered building
(3) 200 ft (60 m) to an approved incinerator
(4) 500 ft (150 m) to a nonapproved incinerator or open fire
(5) 100 ft (30 m) to vehicle and seed trailer, or module parking areas and trash piles
(6) 50 ft (15 m) to roadways and railroad main lines and sidings
(7) 200 ft (60 m) upwind of any reconditioning activity

L.5.5.2 In the case of buildings, sprinklered or unsprinklered, the clear space can be reduced up to 50 percent if construction is fire-resistive or if facing walls are masonry and parapeted with adequately protected openings. This area reduction can also be permitted to be applied to noncombustible buildings of a type limited to corrugated iron or walls and roof on a steel frame.

L.5.6 Fire Protection.

L.5.6.1 To qualify as a protected yard, hydrants should comply with L.4.3, except where amended by Section L.5.

L.5.6.1.1 All areas of yard storage should be within 500 ft (152.5 m) of a fire hydrant. Adequate clearance should be maintained between storage and hydrants.

L.5.6.1.2 Hydrant equipment for each yard group (20,000 bales) should consist of the following:

(1) 250 ft (75 m) of 2½ in. (65 mm) hose
(2) 300 ft (90 m) of 1½ in. (38 mm) hose with provisions to "Y-connect" to the 2½ in. (65 mm) hose
(3) Combination water spray nozzles
(4) Proper wrenches for hydrant operation and hose connections

L.5.6.1.3 Water available to the most remote yard hydrants should be capable of delivering at least 500 gpm (2000 L/min) at an effective pressure for at least a 2-hour period.

L.5.6.2 Approved extinguishing units should be provided on the basis of an equivalent 40A rating for each protected or unprotected yard area or greater fraction thereof (*See L.5.3*).

L.5.6.2.1 Subject to the AHJ, a motorized wet water unit(s) can be substituted for that specified in L.5.6.2, provided that a unit of 250 gal (1000 L) or greater capacity is provided for each group yard area storing up to 20,000 bales.

L.5.6.2.2 Placement of wheeled or motorized units should be at readily accessible locations within 250 ft (75 m) of each yard, protected from damage, and maintained in good operating condition at all times.

L.5.6.3 Water containers and pails, if used, should be distributed at a ratio of one 40 gal (150 L) or greater container with two pails for each 100 bales of storage. However, wheeled wet water pressure extinguishers are permitted in lieu of containers and pails.

L.5.6.4 All motorized vehicles used in designated yard areas should be equipped with a listed multipurpose dry chemical extinguisher of a size appropriate for the anticipated hazard. *(See L.4.4.2 for information on portable fire extinguishers.)*

L.5.6.5 A suitable and reliable means of communication should be available to summon the fire department or other appropriate personnel promptly, to sound a general alarm in the case of fire or other emergency, or both.

L.5.6.6 Reference should be made to L.4.6 for fire emergency planning and procedures that apply to yard storage.

L.5.7 Yard Maintenance and Operations.

L.5.7.1 Smoking. Smoking should be strictly prohibited within 100 ft (30.5 m) of yard storage areas, and "No Smoking" signs should be posted conspicuously. *(See L.6.6.)*

L.5.7.2 Internal Combustion Equipment. All internal combustion equipment used in or around yard storage areas

should be equipped with a suitable spark arrester–type muffler properly maintained and otherwise approved by the AHJ.

L.5.7.3 Guard Watch Service.

L.5.7.3.1 Guard watch service should be provided throughout all designated yard storage areas during all shutdown periods when fewer than 5 days have passed after cotton bales have been ginned or when the total stock exceeds 1000 bales.

L.5.7.3.2 Hourly rounds should be made and recorded during all nonworking hours, using an approved and listed portable clock and having key stations situated to ensure complete coverage of the area of responsibility. Watch service information should be obtained from NFPA 601.

L.6 Administration, Buildings, Equipment, Maintenance, and Operations.

L.6.1 Administration. The administration of buildings and equipment, and the maintenance thereof, is an important consideration in the reduction of fire incidence and loss. The finest buildings and protective features can be abrogated quickly by neglect of the continuous, necessary maintenance of fire loss prevention programs and protective equipment. Thus, management at all levels plays a critical part in the reduction of fire loss. In addition to the recommendations outlined in this annex, the liaison between management and personnel should include a meaningful loss prevention program that provides the following:

(1) Encourages loss prevention habits
(2) Teaches the prompt sounding of alarms
(3) Minimizes panic and effects safe evacuation
(4) Instructs key personnel in the effective utilization of fire-extinguishing equipment and other protective features
(5) Teaches basic salvage and cleanup techniques to minimize the downtime of operations

L.6.2 Mechanical-Handling Equipment.

L.6.2.1 Industrial Trucks. Power-operated industrial trucks and mobile equipment should comply with Section 10.18. Cotton storage and handling areas are defined as Class III, Division 2 hazardous areas and require vehicles designated as types DS, DY, ES, EE, EX, GS, LPS, and GS/LPS.

L.6.2.1.1 Gasoline and diesel fuel should be prohibited in cotton storage areas, on platforms, and in exposing yard areas. Fueling should be done outside at a well-detached location in accordance with Chapter 66.

L.6.2.1.1.1 Gasoline and diesel fuel contained in the vehicle tanks are permitted.

L.6.2.1.2 Liquefied petroleum gas (LP-Gas) fuel containers should be exchanged or removed only outdoors. The valve at the fuel container should be closed and the engine allowed to run until the fuel line is exhausted. Tanks should be refueled only at well-detached locations. LP-Gas fuel systems on LP-Gas dual fuel–powered trucks should be in accordance with the applicable provisions of Chapter 69.

L.6.2.1.3 Charging equipment for storage batteries should be in a separate area, room, or building designated for that purpose. If located in a separate room, the room should be lined with substantial noncombustible materials constructed to exclude "fly" or lint. Charging areas should be kept free of extraneous combustible materials and trash. Adequate ventilation should be provided to minimize concentrations of hydrogen gas during charging.

L.6.2.1.4 All mechanical equipment and refueling areas should be kept free of accumulations of fibrous lint, oil, and trash with particular attention paid to the internal areas of vehicles.

L.6.2.2 Maintenance and Operations. The following recommendations should be met prior to the entrance or use of industrial trucks in a cotton storage or handling area:

(1) All traces of fuel should be cleaned from the vehicle before it is started.
(2) Vehicles that have exhausted fuel tanks should be towed to the assigned fueling area for refueling.
(3) Repairs should be prohibited in cotton storage or handling areas.
(4) Alterations of the fire safety features should be prohibited.
(5) Maintenance procedures should comply with those outlined in Section 10.18. *(See L.6.2.1.)*

L.6.2.3 Interplant Haulage. Tractors used for interplant hauling should be equipped with a properly maintained, suitable, spark arrester–type muffler.

L.6.2.4 Motorized Vehicles. Motorized vehicles, other than those specified under L.6.2.1, should not be permitted to enter any cotton storage area. A loading platform should be located so that trucks cannot fully enter inside the closing walls of a warehouse with the truck space inclined away from the platform and lower than the platform. The loading area should be closed off from any under-floor building space.

L.6.2.5 Equipment Storage. Mechanical-handling equipment, when not in use, should be stored outside.

L.6.3 Building Service and Equipment.

L.6.3.1 Electrical Installation.

L.6.3.1.1 It is recommended that cotton storage and handling areas be free of electrical installations. However, installations that are necessary should comply with NFPA 70 for Class III, Division 2 hazardous areas.

L.6.3.1.2 Electrical extension cords should be prohibited in storage areas. If portable lights are necessary, battery-powered lanterns or flashlights can be used.

L.6.3.2 Open-Flame Heating Devices. Open-flame heating devices, permanent or temporary, should be prohibited.

L.6.3.3 Shops and Equipment.

L.6.3.3.1 Repairing and reconditioning and boilers or similar equipment should be prohibited in cotton storage areas. Separate buildings should be provided for such purposes or should be separated from storage areas by a standard 2-hour fire wall.

L.6.3.3.2 The term *reconditioning* applies mainly to cotton and is defined as any opening, drying, cleaning, or picking of bales of loose cotton by any means whatsoever, except for the following:

(1) Air drying (not compressed air) of baled cotton at room temperature where not more than one band is removed from each bale being so dried.
(2) The picking of baled cotton by hand where not more than five bales are in the process of being picked on the premises at any one time, and where at least two bands remain on each bale so picked. Removal of more than one band is to be considered part of the picking process.
(3) The opening of bales in the press room for pressing or recompressing.

(4) The cleaning of baled cotton by brushing (manual only) where the process employed does not remove an appreciable quantity of lint.

Mechanical reconditioning operations should confine lint and "fly" to the reconditioning building and should be separated from cotton storage (or compress) by a standard fire wall without openings or by unobstructed clear spaces as outlined in Section L.2.

L.6.4 Cutting and Welding.

L.6.4.1 Where cutting and welding operations are necessary, the precautions contained in Chapter 41 should be followed.

L.6.4.2 Welding, soldering, brazing, or cutting should be permitted only by the authorization of management. Proper precautions should be observed and should include the following:

(1) A supervisor should be assigned to the operation.
(2) The area should be made fire-safe.
(3) Work should be removed to a safe area, where possible.
(4) Where these operations are performed on equipment or building components that cannot be moved, there should be no storage below or within a 35 ft (10.7 m) radius.
(5) Floors should be swept clean and wooden floors wet down within the 35 ft (10.7 m) radius.
(6) The cutting and welding equipment to be used should be in good operating condition and properly maintained. Personnel operating arc welding or cutting equipment should be protected from possible shock.
(7) Openings and cracks in wood construction should be tightly covered to prevent the passage of sparks.
(8) All cotton bordering the area should be protected by flameproofed covers or otherwise shielded with metal or asbestos guards or curtains. The edges of the covers at the floor should be tight to prevent sparks from escaping. This precaution should extend to where several covers are used to protect a large storage pile.
(9) All fire protection equipment should be in service and ready for immediate use.
(10) A fire watch should be maintained and equipped with a portable extinguisher during these operations for not less than 1 hour following the completion of open-flame operation.

L.6.5 Waste Disposal.

L.6.5.1 Rubbish, trash, and other waste material should be disposed of at regular intervals. Approved waste cans with self-closing covers should be used where needed. Open fires and incinerator operations should be prohibited within 100 ft (30 m) of any cotton storage building.

L.6.5.2 For additional details, see NFPA 82, *Standard on Incinerators and Waste and Linen Handling Systems and Equipment.*

L.6.6 Smoking.

L.6.6.1 Smoking should be strictly prohibited, except in locations prominently designated as safe smoking areas. "No Smoking" signs should be posted conspicuously in prohibited areas.

L.6.6.2 The cooperation of employees is more easily secured when a reasonable smoking policy is adopted with smoking allowed in specified locations where there is little hazard, at specified times, and under suitable supervision. Complete prohibition is likely to lead to surreptitious smoking in out-of-the-way locations where the hazard is most dangerous.

L.6.7 Maintenance and Inspection.

L.6.7.1 Fire walls, fire doors, fire door guards, and floors should be maintained in good repair at all times.

L.6.7.2 NFPA 25, *Standard for the Inspection, Testing, and Maintenance of Water-Based Fire Protection Systems,* should be referenced for information on the maintenance and service of sprinkler systems and water supplies.

L.6.7.3 All portable and manual fire-extinguishing equipment should be maintained and serviced.

L.6.7.4 As an aid in maintaining fire protection features and equipment in full service at all times, Figure L.6.7.4 provides a simple self-inspection form that contains a checklist of loss prevention principles. This sample form can be used without change or as a guide in establishing a specialized form to suit individual facilities.

L.6.8 Grass and Weeds. All dried grass and weeds should be kept clear of buildings for at least 50 ft (15 m).

L.7 Information on Fighting Fires in Baled Cotton.

L.7.1 Introduction. The information contained in this section is a summary of knowledge gained over the years by cotton warehouse personnel, fire fighters, and insurance authorities in fighting fires in the Cotton Belt. The most common considerations when fires occur with densely packed cotton bales are arson and exposure to a fire from an external source. Cotton bale fires have peculiarities that should be understood and respected if a large loss is to be avoided with minimum danger to personnel. Automatic sprinklers, if properly designed and supplied, can be expected to control a baled cotton fire where storage methods outlined in this standard are followed, but extinguishment should not be expected.

The primary rule for any fire is always to call the responding fire department first. Fighting fires of any type is a profession and, even where a well-trained private fire organization is available, professional aid should be effected as soon as possible, and plant personnel should not be unduly exposed to the peril.

The myriad of small fibers that make up a cotton bale, especially a naked cotton bale or one wrapped in burlap, and cover its surface offer a highly vulnerable source of ignition as well as the potential for a rapid flame spread above the stored material. Such rapid flame spread is usually followed by a slower flame spread at the surface, then tenacious burrowing into the pile between bales and penetration of the interiors of individual bales. Densely packed cotton bales are less vulnerable to rapid flame spread, surface fire, and a burrowing fire than loose fibers or low density cotton bales, but the possibility of such a fire should not be ignored.

L.7.2 Causes. Some of the causes of cotton fiber fires include the following:

(1) Fire-packed bales (as discussed further in L.1.3.2 and L.7.10)
(2) Electrical faults
(3) Mechanical equipment (e.g., defective lift trucks)
(4) Friction
(5) Lightning
(6) Cutting and welding
(7) Smoking

WAREHOUSE NO. _____	COMPARTMENT NO. _____

	YES	NO
General Housekeeping		
1. Inside Buildings		
(a) Floor and dock areas clean of loose cotton and trash?	❑	❑
(b) Covered metal containers for loose cotton and trash?	❑	❑
2. Outside Buildings		
(a) Surrounding areas free of dried grass, weeds, and combustible trash?	❑	❑
Smoking		
1. Evidence of smoking in unauthorized areas?	❑	❑
2. Signs posted and readily visible?	❑	❑
Electrical Equipment		
1. Extension cords prohibited?	❑	❑
2. Storage in contact with lights or wiring?	❑	❑
3. Wiring properly supported and undamaged?	❑	❑
4. Circuits properly fused?	❑	❑
5. All panels, junction, switch, and receptacle boxes covered?	❑	❑
Mechanical Equipment		
1. Listed for fiber storage (Type DS, DY, ES, EE, EX, GS, or LPS)?	❑	❑
2. Spark-retardant mufflers maintained?	❑	❑
3. Refueled outside at designated area?	❑	❑
4. Stored outside when idle?	❑	❑
5. General condition and maintenance good?	❑	❑
Buildings		
1. Fire walls in good repair, including around fire door openings?	❑	❑
2. Fire doors in proper working condition and tested for ease of closing each week? (Overhead, roll-type doors should be tested at least annually.)	❑	❑
3. Fire door guards in place and maintained?	❑	❑
4. Floor and exterior walls in good repair?	❑	❑
5. Exterior wall openings have doors and windows in place that close properly and lock?	❑	❑
6. Space under grade floor, if any, closed off?	❑	❑
Storage Arrangements		
1. Storage Blocks		
(a) Within prescribed height [15 ft (4.6 m)]?	❑	❑
(b) Sprinkler heads unimpaired [18 in. (457 mm) clearance]?	❑	❑
(c) Block sizes limited to 700 bales pressed or 350 flat?	❑	❑
(d) Tiered storage stable and secure?	❑	❑
2. Aisles		
(a) At least one main aisle 12 ft (3.7 m) or more in width?	❑	❑
(b) Cross or work aisles at least 4 ft (1.2 m) in width?	❑	❑
(c) Any damaged bales, broken bands, or wet stock?	❑	❑

	YES	NO
Fire Department		
1. Phone number prominently displayed at each phone?	❑	❑
2. Personnel instructed on procedure in case of fire?	❑	❑
Watch Service		
1. Making regular rounds?	❑	❑
2. All key stations punched?	❑	❑
3. Records checked, dated, and filed?	❑	❑
Fire Alarm Service		
1. Automatic fire alarm system in service?	❑	❑
2. Manual pull stations clearly marked and accessible?	❑	❑
3. System tested within required frequency?	❑	❑
Manual Extinguishing Equipment Portable Extinguishers		
1. Hand Units		
(a) Properly placed and accessible?	❑	❑
(b) Recharged within the last year?	❑	❑
(c) All in good condition?	❑	❑
2. Containers and Buckets		
(a) Properly distributed?	❑	❑
(b) Kept full?	❑	❑
(c) Two buckets per barrel?	❑	❑
3. Mobile Equipment		
(a) Properly placed and protected from damage?	❑	❑
(b) Charged and ready for service?	❑	❑
Inside Hose		
1. Hose and nozzle attached to each?	❑	❑
2. Racked and in good condition?	❑	❑
3. Easily accessible and ready for use?	❑	❑
4. Valves operate readily?	❑	❑
Yard Hydrants and Hose Houses		
1. Readily accessible?	❑	❑
2. Hose racked or reeled and in good condition?	❑	❑
3. Nozzles, spanners, hydrant wrench available?	❑	❑
4. Hydrants operable?	❑	❑
5. General condition: ❑ Good ❑ Poor		

Remarks (Report on any unusual conditions and action taken):

Report by: _____ Date: _____

© 2005 National Fire Protection Association NFPA 1 (p. 1 of 1)

FIGURE L.6.7.4 Sample Loss Prevention Self-Inspection Form for Baled Cotton Storage.

Arson and exposure to fire from an external source appear to be the most prominent fire causes.

L.7.3 Incipient Stage. If caught in the incipient stage, fire can often be controlled, provided the proper procedures are followed. Portable extinguishing equipment, such as containers and pails, or pressurized or pump-type water units can be used to wet down the exterior of the bale quickly. If small extinguishers are not successful, portable, wheeled, wetting agent tanks or standpipe hose, or both, should be used. The last resort is hose streams from outside hydrants. Extreme caution should be exercised when straight hose streams are used, as the force of the stream could scatter the burning wads or portions of cotton over a wide area. Spray or fog nozzles are recommended, but, if they are not available, it might be possible to deflect a solid stream off the walls, roof, or other solid object.

Once the exterior of the bale(s) is fully wet down and fire is suppressed, the bales involved should be removed to an outside, safe location for final extinguishment.

CAUTION: An obviously burning bale should never be dragged or mechanically moved down aisles, as this is likely to spread the fire to bales bordering the aisle. *(See L.7.9.)*

L.7.4 Active Stage in Sprinklered Buildings. If a fire progresses well beyond the incipient stage or involves more than a few bales and further fire spread is likely, the building could readily prove untenable, and dense smoke could quickly obscure vision. It then is best to have all personnel vacate the building to a point of safety. As drafts, including early venting through roofs and walls, are undesirable, it is essential to leave the building unventilated, close all doors, and cut off all possible drafts to the building or section involved. This procedure reduces available oxygen to the fire, and the dense smoke suppresses fire intensity. Drafts not only provide fresh air to increase fire intensity but also can blow heat away from the fire, opening sprinklers beyond the fire area and possibly overtaxing the available water to the sprinkler system.

The sprinkler system should be given a chance to do its job — do not ventilate! Ventilating a cotton fire can cause it to flash out of control, spread with explosive violence, and open an excessive number of sprinklers. After the fire is under control of the sprinkler system, the compartment door should be opened only enough to use fire hose or to enter and remove the cotton. The smoldering bales should be removed to the outside as soon as possible for individual attention. Extreme caution should be exercised when entering a fire area. Entry should be on the downwind side, if possible, to avoid creating draft conditions that could cause the fire to reignite. It is important to remain alert for gas explosions. If the fire appears to flare up again, the building should be vacated immediately, the doors again should be closed tightly, and the sprinkler system should be allowed to regain control.

L.7.5 Sprinkler Failure. If the sprinkler system fails to maintain fire control, then hose streams should be used, preferably through door openings only large enough for the hose.

Where it is apparent that the fire is beyond the control of the sprinklers and the building is nearing the point of collapse, the control valve(s) to the sprinkler systems in the building or section involved should be shut off to conserve water for hose stream use.

L.7.6 Active Stage in Nonsprinklered Buildings. Immediately upon arrival at the fire, personnel should close all openings to the compartment involved. As many hose lines as possible, preferably supplied with a wetting agent, should be available. The doors should be opened only enough to allow the use of the hose in a spray-like fashion. Caution should be exercised to open these doors slowly to minimize the chance of an explosion. The doors on the opposite sides of the compartment should not be opened, which would allow a cross-draft. Only the door on the lee side, and not the windward side of the building should be opened.

L.7.7 Cotton Yard Fires. Conditions in a cotton yard fire are not as controllable as those in a warehouse fire, since draft conditions are almost entirely dependent upon the climatic conditions at the time of the fire. If an adverse wind prevails, a small involvement can easily become a catastrophe. Preplanning is particularly important in this case. Upon responding personnel arrival at a cotton yard fire, the following steps should be taken immediately:

(1) If available, fire department connection to the hydrants should be utilized.
(2) Hose lines should be laid out.
(3) Using divided stream nozzles, water should be applied ahead and downwind of the fire and then worked toward the fire.
(4) Bales and dunnage should be checked underneath for fire.
(5) It is important to remain alert for flying sparks.
(6) The nearby uninvolved cotton should be removed to create a fire break.
(7) Burned cotton should be removed to a segregated area.

L.7.8 After Watch. Where the fire-involved cotton has been removed and leaves behind undamaged stock, a minute and unobserved spark often causes a rekindling of the previous fire with disastrous results. The involved area should be inspected and carefully cleaned. Hose lines and fire department watch should be maintained until the area is known to be safe. Before leaving the scene of the fire, responsible plant personnel should be advised that after watch should be kept for at least 24 hours. One of the most disastrous fires on record could possibly have been prevented with adequate after watch following a minor involvement.

L.7.9 Salvage Operations. Salvage is important, and every precaution should be taken to protect the salvage. The usual severity of a fire in a cotton warehouse, along with the appearance of the charred bales, is misleading with respect to the amount of remaining salvage.

Water does not damage cotton, and if the charred bales are kept cool with hose streams until proper salvage operation is begun, the quantity of the loss can be reduced substantially.

After the fire is brought under control, all bales involved should be removed to a safe outside location as quickly as possible and practicable. Each bale then should be handled individually in order to effect complete extinguishment. This extinguishment is best accomplished by the use of small hose lines or barrels and buckets, using a wetting agent known as wet water.

WARNING: Do not remove the bands or wires from the bales.

To do so exposes more lint to the fire and threatens the loss of the entire bale. Salvage crews should be ready to move the cotton out of the involved shed as rapidly as possible. Extreme caution should be exercised in preparing and watching the path along which the burned bales are removed from the involved shed. Burning fibers of cotton are easily blown from the bale, especially in the haste and excitement of moving the bales outside. It could be necessary to move the uninvolved

bales away from the exit route (or from the entire compartment) or even to make a hole in the side of the compartment. The spread of fire along the exit route caused by burning bales is not uncommon. The burning bales should be wetted down and moved to a safe, segregated place as soon as possible for individual attention.

The following are steps to be taken in the salvage operation:

(1) An open area, without exposures, into which the burning bales can be moved should be selected.
(2) A salvage crew should be stationed at the yard.
(3) A good supply of wetting agent should be available.
(4) A good supply of water should be available.
(5) Containers, pails, and stirrup pump-type extinguishers should be available, filled with wet water.
(6) Burning bales should be wetted down and removed from the fire area as soon as possible. They should be placed approximately 3 ft (0.9 m) apart in an open area away from other exposures.
(7) Care should be exercised in removing these bales so as not to start another fire in the process. If the side of the compartment is metal-clad or frame, it could be best to remove a portion of the side so that the cotton can be removed. Some warehouse personnel take the time to remove cotton from those compartments through which the burning bales travel before salvage operations are allowed to start. If there is any question regarding additional exposures, they should be removed, if possible, before moving the burning bales.
(8) Any outside blaze on the bale should be knocked down. The wet water should be applied to each smoldering spot on the bale. Often a handful of cotton soaked in the wet water can be applied directly on or into the smoldering spot. Cotton fires burrow into the bale, so it is necessary to apply the wet water as far into the hole as possible, soaking the area thoroughly. In order to be certain the fire is out, the burned cotton should be removed from each hot spot while applying wet water to the hole. When the area around the spot is no longer warm, it can be assumed that the fire has been extinguished.
(9) The bands from the bales should not be removed. To do so exposes more lint to the fire, and the bale will probably be a complete loss.
(10) Bales involved in a fire should be closely watched for at least 5 days after the last spark is believed to have been extinguished.

L.7.10 Fire-Packed Bales. Fire-packed bales are bales of cotton suspected of containing an internal fire. In the ginning process, the lint fiber is separated from the cotton seed by automated mechanical operations, involving heating of the lint fiber for drying purposes. During ginning, the three most common sources of ignition are friction, sparks created by the machinery, and high temperatures, usually from the process heater drying the lint fiber. Fire occurs during the ginning process when loose cotton fibers are ignited and incorporated into the bale during compression. In cases where fires occur during the ginning process, technical instructions have been developed by the U.S. Department of Agriculture and are contained in the section on "Procedures for (fighting) Gin Fires" in the *USDA-ARS Cotton Ginners Handbook.* These procedures recommend that, when a fire has occurred, all lint traveling towards the bale press box is to be treated as if a fire is in the lint. The current guidelines state that the (bale) press operator is to do the following:

(1) Stay with the press and battery condenser until the fire is out.
(2) Wait until all cotton is down the (lint) slide, and then turn the press and raise (press) the bale out of the press (hole).
(3) Keep the tramper running if cotton is burning in the lint slide
(4) If a fire is in the battery condenser, wet down the areas around the flashing and rollers, and avoid letting the fire burn on the lint belt or near the flashing.
(5) Isolate at least two bales before and after a suspected bale fire.

Under this scenario, fire-packed bales might result. Even though these bales might meet the size requirements for densely packed baled cotton, they will not meet the density (or compression) requirement. Any bale that is successfully compressed to the packing density of a densely packed cotton bale would have had any internal fire rapidly extinguished due to lack of oxygen. However, surface smoldering fires can occur even with densely packed cotton bales. Such fires will be immediately visible to the operator, who needs to ensure that even densely packed cotton bales produced during the ginning process should undergo a thorough inspection whenever a fire has occurred. Any cotton bale found to have a surface fire should be treated as if it were a fire-packed bale until the quarantine period has ended.

Gin and warehouse forepersons train their workers to use the senses of smell, touch, and sight to find potential fire bales. In a low density bale, with an internal fire, the fire usually burns through to the outside of the bale within a few hours, but it can remain undetected for several days. The obvious acrid odor associated with smoldering cotton is usually the first indicator that fire is present inside a bale. Once an acrid odor is traced to a specific bale, the worker should use his sense of touch to determine if the bale feels excessively warm and is thus a fire-packed bale.

The recommended procedure for handling and extinguishing fire-packed bales is as follows:

(1) All known or suspect fire-packed bales should be stored in the open and segregated from buildings and other storage. They should be separated about 3 ft (0.9 m) from other such bales.
(2) These bales should be under constant surveillance to detect fire as soon as it moves to the surface.
(3) A supply of an approved wetting agent and at least one stirrup pump should be available at all times.
(4) When fire is detected, the area around the hot spot should be wetted immediately to prevent the spread of the fire. The hot spot then should be saturated with wet water. The burned cotton should be removed by hand while water is constantly applied to the hole. This procedure should be continued until no warm areas are detected. It is not uncommon for several fires to be packed into a single bale.
(5) Do not remove the bands from the bale, as this exposes more cotton fibers to ignition and usually results in the total loss of the bale.
(6) Fire-packed bales or bales suspected of being fire-packed should remain in quarantine and under surveillance for at least 5 days. After this time, they can be considered to be safe and handled in the regular manner.

Note that there is no set time after which a fire can be considered extinguished in a bale, as this depends on the thoroughness of extinguishment. However, 5 days after the fire is believed to have been extinguished is generally considered to be a rule-of-thumb safe period.

Annex M Recommendations for Fighting Rubber Tire Fires in Sprinklered Buildings

This annex is not a part of the requirements of this NFPA document but is included for informational purposes only.

M.1 Introduction. It is essential that the steps necessary for fighting rubber tire fires be understood by both the building occupant and the fire service to prevent unnecessary injury or loss of life and to prevent loss of fire control during overhaul. This activity necessitates emergency preplanning with the local fire department, building occupant, and others as deemed necessary.

Fire tests of rubber tire storage have indicated that smoke can quickly obstruct the visibility within a building and obscure the burning materials. Plans for the attack and extinguishment of the fire should be prepared in advance.

Because the products of combustion are harmful, all personnel assigned to interior functions should use breathing apparatus even before obscuration occurs.

Ventilation efforts should be carefully controlled. Drafts from open doors and windows allow fresh air to reach the fire and make control of the fire difficult. Doors and windows should be closed as soon as possible to limit the air supply to the fire and to allow control by automatic systems to be established.

Fire brigades should be trained and equipped with the necessary tools and equipment to respond to a fire emergency and, if possible, attack the fire prior to the arrival of the fire department.

Review of building and fire protection system plans should be part of the ongoing training of both the on-site personnel and fire departments.

A tire fire can progress quickly through the phases described in the following paragraphs, and each phase presents different conditions to responding emergency personnel. Items for consideration in the emergency preplanning program are provided for inclusion in such plans.

Observations at tire fire tests and accounts of actual fires have indicated that, while automatic sprinklers with adequate densities in approved configurations can control a fire, extinguishment by sprinklers alone normally does not occur. The four tests used also indicate that sprinkler protection can be overcome by the following:

(1) Storage exceeding the heights indicated in this *Code*
(2) Storage configurations that inhibit the movement of heat to the roof, slowing sprinkler operation, and inhibit the waterflow to the seat of the fire, reducing sprinkler effectiveness

M.1.1 Incipient Stage. This stage occurs within 2 to 5 minutes of ignition.

Important: Drafts from open doors increase the intensity of the fire and make control difficult. Doors should be closed as quickly as possible to isolate the fire area.

Important: Fire tests indicate that smoke obscuration occurs within 6 to 9 minutes of ignition, even when the fire is sprinkler controlled. Breathing apparatus could be needed even before obscuration occurs.

If caught in the incipient stage, control can be achieved using interior hand hose and portable extinguishers. Quick reaction is essential, as this window of opportunity no longer exists within 2 to 5 minutes of actual ignition, since the generation of heat and smoke make the area untenable. Dry chemical extinguishers have been found to be most effective but should be backed up with small hose, as the knock-down is only temporary.

Tires in the affected area should be removed from storage. Tires removed from storage should be taken out of doors, thoroughly soaked, and left where they cannot expose other combustibles. The area where the fire occurred should be closely watched for several hours for rekindling.

While the first sprinkler can be expected to operate within the first 2 to 5 minutes of ignition, the updraft from the fire can disrupt the sprinkler pattern to such an extent that the water might not get to the seat of the fire. After the first 4 minutes, the fire has generally progressed beyond the stage where portable extinguishers are effective and, within minutes, the smoke and carbon monoxide make the area untenable. Vision is obscured, and any personnel without breathing apparatus is at risk.

M.1.2 Active Stage. The active stage of the fire follows the initial stage and is generally defined as that period where the sprinkler system is establishing control over the fire.

Important: Even though the fire is sprinkler controlled, roof temperatures resulting from the tire fires can reach temperatures high enough to cause steel joists to deflect and possibly fail. In recent fire tests, gas temperatures at roof level ranged between 1110°F and 1450°F (593°C and 788°C) for 10 minutes. Roof steel exposed to this high gas temperature could deflect or fail if subjected to additional loading. Do not place personnel on roof to attempt ventilation.

Important: Local fire departments attempting to draft from the sprinkler supply system will decrease the sprinkler effectiveness. If possible, separate municipal hydrants should be identified for fire department use.

Important: As the sprinklers gain control of the fire, the smoke will turn from black to gray. A return to black smoke is an indication that the sprinklers are not controlling the fire. Pump and system pressure also should be monitored. Loss of system pressure is an indication of more sprinklers operating, pump failure, or loss of control.

Responding local fire departments should be arriving by this time. Building personnel should advise arriving fire personnel of the location of all occupants of the building. At this point, there is little for the fire department to do except to connect to the municipal water supply and prepare to supplement the fire protection system through the fire department connection.

Fire department personnel or maintenance personnel, or both, should respond to the fire pump room and work to maintain operation of the fire pump. System discharge pressure should be observed to determine if the pressure is stable. Unstable or decreasing discharge pressure indicates changes in the operating conditions of the fire protection system.

During this stage, the building is untenable, and obscured vision makes the use of hose streams questionable. It should be noted that, in buildings with smoke vents, longer use of fire hose could be possible, but at some risk to personnel. It is best to allow the sprinklers to take control of the fire. Most of the sprinklers will begin to operate within 15 to 20 minutes of ignition, if sprinkler control is effected. Sprinklers should be allowed to operate at least 60 to 90 minutes to gain control. Successful fire tests indicate that waterflow stabilizes within the first 20 minutes of the fire.

The building is best left unventilated at this time. As control is gained, the smoke will change from black to gray and will diminish in intensity. During this period, at least six

charged 1½ in. (38 mm) hose lines should be laid out prepatory to entering the building. Portable flood lights should be secured as well as turn-out gear, breathing apparatus, and forklifts for the overhaul crew.

M.1.3 Critical Stage. The critical stage occurs between the final extinguishment and the ventilation of the building.

Important: Ventilation should be done slowly, and the sprinklers should be left in operation. A return to black smoke is an indication that control is being lost. If this happens, ventilation should cease, the building should be closed, and the sprinkler system should be allowed to regain control. It should be understood that, during the attempt to ventilate the building, the fire intensity can increase due to the addition of outside air. Additional sprinklers can be expected to operate during the ventilation effort. If control has been gained, extra sprinklers might make no difference in overall performance. If control has not been gained or is marginal, this increase in the number of operating sprinklers could make regaining control more difficult due to the overall increase in sprinkler demand. Unless there is a system failure, the sprinklers should regain control. If there is any doubt that control of the fire has been gained, the sprinkler system should be allowed to soak the fire for longer than 90 minutes.

Important: The officer in charge should have a contingency plan if control is lost due to a system failure. In the event that control of the fire is lost, as evidenced by such indicators as increasing smoke generation, loss of pressure at the fire pump discharge (indicating massive sprinkler operation), or collapsing roof, efforts should be directed toward preventing the spread of the fire beyond the area bounded by the fire walls. At this point, consideration should be given to shutting off the sprinklers in the fire area to provide water for protecting the exposures.

After 60 to 90 minutes and when the smoke intensity has diminished, the building should be ventilated around the periphery of the fire area. If control has been gained, the roof temperature will usually have cooled sufficiently to allow roof vents to be opened manually if they have not already opened automatically.

M.1.4 Overhaul. Although visible fire is no longer present, overhaul of the area of the fire should be conducted to be certain of complete extinguishment.

Important: Care should be taken that the hose streams do not lower the pressure or water supply to the sprinkler system. Sprinkler operation should cease only when the fire chief is certain that hoses can control the fire.

Important: Caution should be used, since the tire piles will be unstable.

As soon as the smoke clears to the extent that the building can be entered, entry should be made using small hose streams that should be directed into the burning tires. Sprinklers should be kept in operation during this period.

Forklifts and other means should be used to remove the tires from the fire area to outside the building. It usually is necessary to keep the sprinklers in operation during this procedure at least until there is no evidence of flame. Patrols should be made of the affected area for at least 24 hours following the fire.

Following fire extinguishment, all fire protection systems should be restored to service as quickly as possible. These systems include but are not limited to the following:

(1) Sprinkler systems
(2) Alarm systems
(3) Pumps
(4) Water supplies

M.2 Use of High-Expansion Foam. If a high-expansion foam system is used in connection with automatic sprinklers, sprinklers can be shut off 1 hour after ignition, and foam can soak the fire for an additional hour before the building is opened and overhaul is begun. Limited tests with high-expansion foam indicate that fire extinguishment is largely complete after a period of soaking in foam. As a precautionary measure, charged hose streams should be available when foam is drained away.

After the initial fill, foam generators should be operated periodically during the soaking period to maintain the foam level. This procedure is necessary since sprinklers and products of combustion will cause partial foam breakdown.

Annex N AHJ Minimum Qualifications and Job Descriptions for Code Enforcement Personnel

This annex is not a part of the requirements of this NFPA document but is included for informational purposes only. The full content of provisions for minimum qualifications and job descriptions for code enforcement personnel are found in NFPA 1031, Standard for Professional Qualifications for Fire Inspector and Plan Examiner, 2003 edition.

N.1 Minimum Qualifications. Employees of the AHJ assigned the responsibility of enforcing this *Code* should meet the following minimum requirements:

(1) A person assigned the duties of Fire Inspector should meet all of the requirements defined in Chapter 4 of NFPA 1031 prior to being certified as a Fire Inspector I.
(2) A person assigned the duties of Fire Inspector I should meet all of the requirements defined in Chapter 5 of NFPA 1031 prior to being certified as a Fire Inspector II.
(3) A person assigned the duties of Fire Inspector II should meet all of the requirements defined in Chapter 6 of NFPA 1031 prior to being certified as a Fire Inspector III.
(4) A person assigned the duties of Plan Examiner should meet all of the requirements defined in Chapter 7 of NFPA 1031 prior to being certified as a Plan Examiner I.
(5) A person assigned the duties of Plan Examiner I should meet all of the requirements defined in Chapter 8 of NFPA 1031 prior to being certified as a Plan Examiner II.

N.2 Job Descriptions. Employees of the AHJ assigned the responsibility of enforcing this *Code* should be classified according to the job titles and descriptions in N.2.1 through N.2.5.

N.2.1 Job Title: Fire Inspector I.

N.2.1.1 Basic Function. The Fire Inspector I is responsible for inspecting public, commercial, and residential structures for compliance with applicable fire codes.

N.2.1.2 Principal Responsibilities. The Fire Inspector I is responsible for the following:

(1) Inspecting public, commercial, and residential structures to ensure compliance with jurisdiction, state, and federal fire codes and ordinances
(2) Conducting inspections of fire hazard complaints and underground storage tanks for compliance with jurisdiction, state, and federal regulations

(3) Identifying corrective actions that must be made to bring properties into compliance with applicable fire codes, laws, regulations, and standards
(4) Assisting citizens and other agency personnel with code interpretations and information when requested, preparing written documents, and maintaining files
(5) Issuing citations for fire code violations
(6) Providing court testimony regarding fire code violations

N.2.1.3 Typical Decisions. The incumbent determines if structures are in compliance with jurisdiction, state, and federal fire codes and ordinances. The incumbent establishes performance measures for subordinates and evaluates employee performance against those standards or measures.

N.2.1.4 Minimum Qualifications. The Fire Inspector I should have the minimum qualifications in N.2.1.4.1 through N.2.1.4.5 at a minimum.

N.2.1.4.1 Knowledge. Position requires conducting fire safety programs and a working knowledge of methods of fire prevention, fire protection systems, and building construction.

N.2.1.4.2 Skills. Position requires effective oral and written communication skills. Must be able to make mathematical calculations.

N.2.1.4.3 Education. Position requires associate's degree in fire science or equivalent.

N.2.1.4.4 Experience. Position requires 4 years of experience, including 1 year of lead responsibility in fire inspection and/or fire prevention.

N.2.1.4.4.1 Any work-related experience resulting in acceptable proficiency levels in the minimum qualifications is an acceptable substitute for the specified education and experience requirements listed in N.2.1.4.3 and N.2.1.4.4.

N.2.1.4.5 Licenses/Certificates. Position requires driver's license and inspector certification.

N.2.2 Job Title: Fire Inspector II.

N.2.2.1 Basic Function. The Fire Inspector II is responsible for inspecting public, commercial, and residential structures for compliance with applicable fire codes.

N.2.2.2 Principal Responsibilities. The Fire Inspector II is responsible for the following:

(1) Inspecting and evaluating public, commercial, and residential structures to ensure compliance with jurisdiction, state, and federal fire codes and ordinances and reviewing plans for compliance with fire codes
(2) Conducting inspections of complex fire hazard complaints and underground storage tanks for compliance with jurisdiction, state, and federal regulations
(3) Identifying corrective actions that must be made to bring properties into compliance with applicable fire codes, laws, regulations, and standards and recommending modifications to jurisdiction's fire codes
(4) Assisting citizens and other agency personnel with code interpretations and information when requested, preparing written documentation, creating forms and checklists addressing key inspection issues, and designing and maintaining filing system for division
(5) Issuing citations for fire code violations and providing court testimony regarding fire code violations
(6) Assisting and instructing lower level inspectors in code application, interpretation, and office procedures

N.2.2.3 Typical Decisions. The incumbent determines if structures are in compliance with jurisdiction, state, and federal fire codes and ordinances. The incumbent establishes performance measures for subordinates and evaluates employee performance against those standards or measures. He or she also recommends modifications in the policies and procedures of the division.

N.2.2.4 Minimum Qualifications. The Fire Inspector II should have the qualifications in N.2.2.4.1 through N.2.2.4.5 at a minimum.

N.2.2.4.1 Knowledge. Position requires conducting fire safety programs and a working knowledge of methods of fire prevention, fire protection systems, and building construction.

N.2.2.4.2 Skills. Position requires effective oral and written communication skills. Must be able to make mathematical calculations.

N.2.2.4.3 Education. Position requires bachelor's degree in fire protection, fire science, or equivalent.

N.2.2.4.4 Experience. Position requires 4 years of experience, including 1 year of lead responsibility in fire inspection and/or fire prevention. Any work-related experience resulting in acceptable proficiency levels in the minimum qualifications is an acceptable substitute for the specified education and experience requirements listed in N.2.2.4.3 and N.2.2.4.4.

N.2.2.4.5 Licenses/Certificates. Position requires drivers' license and inspector certification.

N.2.3 Job Title: Fire Inspector III.

N.2.3.1 Basic Function. The Fire Inspector III is responsible for the fire prevention and fire inspection activities of the jurisdiction. The Fire Inspector III serves as a manager and directs all activities of the division and integrates the jurisdiction's goals into the day-to-day operation of the division.

N.2.3.2 Principal Responsibilities. The Fire Inspector III is responsible for the following:

(1) Directing the preparation and submittal of the division's budget and allocating its resources in accordance with policy to ensure maximum performance
(2) Serving as the division's liaison with various jurisdiction, state, and federal government agencies, as well as local organizations and groups
(3) Recommending and implementing changes in division policy and operations to improve efficiency and effectiveness, and preparing and recommending updates in codes and standards for the jurisdiction
(4) Directly supervising all employees assigned to the division
(5) Indirectly coordinating through an established chain of command all fire department services, programs, and activities relating to fire prevention
(6) Establishing realistic and obtainable goals for subordinates through a team process and ensuring successful obtainment of these goals through appropriate training and assigned accountability
(7) Serving as a highly visible representative of the fire department and the fire service to the jurisdiction at large through involvement in various community organizations and events relating to fire prevention

N.2.3.3 Typical Decisions. The incumbent is required to make decisions relating to employee selection and appointment, fire

code development and interpretations, and divisional administrative matters.

N.2.3.4 Minimum Qualifications. The Fire Inspector III should have the qualifications in N.2.3.4.1 through N.2.3.4.5 at a minimum.

N.2.3.4.1 Knowledge. Position requires thorough knowledge of the principles, practices, and techniques of modern suppression systems and fire prevention practices and must also possess the ability to apply this knowledge to fire prevention laws and ordinances; principles of public administration with reference to code development, enforcement, and personnel administration; and principles of jurisdiction budget preparation and finance.

N.2.3.4.2 Skills. Position requires the ability to provide effective leadership and to plan and assign, directing the work of subordinates; plan, initiate, and carry out long-term programs in the division and relate the division's programs with other jurisdictional programs, goals, and objectives; speak and deal tactfully and effectively with the people with whom he or she comes in contact; fairly and effectively evaluate the performance of subordinates; communicate orally and in writing to analyze the concepts necessary for accomplishment of required written and oral records and reports; and exhibit an ability to positively represent the department and jurisdiction in the community at large.

N.2.3.4.3 Education. Position requires minimum of a bachelor's degree (master's degree preferred) with concentration in fire science, public administration, or related fields, supplemented by specialized training sufficient to meet the qualifications for certification as a master fire inspector.

N.2.3.4.4 Experience. Position requires 10 years experience as a full-time employee with a career department with a strong background in fire prevention and code enforcement. Must also have demonstrated technical competence in the areas of fire suppression system design and development and code administration. Any work-related experience resulting in acceptable proficiency levels in the minimum qualifications is an acceptable substitute for the specified education and experience requirements listed in N.2.3.4.3 and N.2.3.4.4.

N.2.3.4.5 Licenses/Certificates. Position requires drivers' license and master inspector certification.

N.2.3.4.6 The statements in N.2.3.4.1 through N.2.3.4.5 are intended to describe the general nature and level of work being performed and are not intended to be an exhaustive list of all responsibilities, duties, and skills that can be required.

N.2.4 Job Title: Plan Examiner I—FLSA.

N.2.4.1 Basic Function. The Plan Examiner I is responsible for examining building plans, fire protection system plans, and specifications for compliance with applicable fire codes and laws.

N.2.4.2 Principal Responsibilities. The Plan Examiner I is responsible for the following:

(1) Responding to fire code, law, and life safety inquiries from citizens
(2) Reviewing and evaluating routine building plans, site plans, and fire protection system plans in terms of fire code and building code life safety criteria
(3) Receiving and responding to requests for information and technical assistance from architects, engineers, and developers on design criteria for various occupancies and industrial processes
(4) Attending meetings with architects, developers, and jurisdiction staff to discuss plan review requirements and procedures
(5) Assisting in preparation of variances and appeals before the Building Standards Commission

N.2.4.3 Typical Decisions. The incumbent evaluates and approves fire protection system plan submittals and makes recommendations on alternate methods or materials when appropriate. The incumbent evaluates and makes recommendations on requests for variance to the fire codes and local laws pertaining to fire safety.

N.2.4.4 Minimum Qualifications. The Plan Examiner I should have the qualifications in N.2.4.4.1 through N.2.4.4.5 at a minimum.

N.2.4.4.1 Knowledge. Position requires a working knowledge of fire and building codes and laws, basic knowledge of the principles, techniques, and design of fixed fire suppression and detection systems, and the ability to read and interpret plans and blueprints.

N.2.4.4.2 Skills. Position requires effective oral and written communication skills.

N.2.4.4.3 Education. Position requires associate's degree (bachelor's degree preferred) in fire protection technology or related field.

N.2.4.4.4 Experience. Position requires 1 year experience in fire protection. Any work-related experience resulting in acceptable proficiency levels in the minimum qualifications is an acceptable substitute for the specified education and experience requirements listed in N.2.4.4.3 and N.2.4.4.4.

N.2.4.4.5 Licenses/Certificates. Position requires drivers' license, certification as an inspector within 12 months of hire date, and certification in fire alarms and automatic sprinklers within 18 months of hire date.

N.2.5 Job Title: Plan Examiner II.

N.2.5.1 Basic Function. The Plan Examiner II is responsible for examining building plans, fire protection system plans, and specifications for compliance with applicable fire codes and laws.

N.2.5.2 Principal Responsibilities. The Plan Examiner II is responsible for the following:

(1) Responding to fire code, law, and life safety inquiries from citizens
(2) Reviewing and evaluating routine and detailed building plans, site plans, and fire protection system plans in terms of fire code and building code life safety criteria
(3) Receiving and responding to requests for information and technical assistance from architects, engineers, and developers on design criteria for various occupancies and industrial processes
(4) Attending meetings with architects, developers, and jurisdiction staff to discuss plan review requirements and procedures
(5) Assisting in preparation of variances and appeals before the Building Standards Commission and preparing and authenticating the division's documents
(6) Assisting and instructing lower level plan examiners in code application, interpretation, and office procedures

N.2.5.3 Typical Decisions. The incumbent evaluates and approves fire protection system plan submittals and makes recommendations on alternate methods or materials when appropriate. The incumbent evaluates and makes recommendations on requests for variance to the fire codes and local laws pertaining to fire safety.

N.2.5.4 Minimum Qualifications. The Plan Examiner II should have the qualifications in N.2.5.4.1 through N.2.5.4.5 at a minimum.

N.2.5.4.1 Knowledge. Position requires a working knowledge of fire and building codes and laws; basic knowledge of the principles, techniques, and design of fixed fire suppression and detection systems; and the ability to read and interpret plans and blueprints. Position establishes performance measures for subordinates and evaluates employee performance against those standards or measures.

N.2.5.4.2 Skills. Position requires effective oral and written communication skills.

N.2.5.4.3 Education. Position requires associate's degree (bachelor's degree preferred) in fire protection technology or related field.

N.2.5.4.4 Experience. Position requires 1 year experience in fire protection. Any work-related experience resulting in acceptable proficiency levels in the minimum qualifications is an acceptable substitute for the specified education and experience requirements listed in N.2.5.4.3 and N.2.5.4.4.

N.2.5.4.5 Licenses/Certificates. Position requires drivers' license, certified inspector within 12 months of hire date, and certification in fire alarms and automatic sprinklers within 18 months of hire date.

N.2.5.4.6 The statements in N.2.5.4.1 through N.2.5.4.5 are intended to describe the general nature and level of work being performed and are not intended to be an exhaustive list of all responsibilities, duties, and skills that can be required.

Annex O Additional, Adoptable NFPA Codes and Standards

This annex is not a part of the requirements of this NFPA document unless specifically adopted by the jurisdiction.

O.1 The following documents have been included as a part of the adoption of this *Code* and are considered to be enforceable by the adopting jurisdiction.

National Fire Protection Association, 1 Batterymarch Park, Quincy, MA 02169–7471.

NFPA 13E, *Recommended Practice for Fire Department Operations in Properties Protected by Sprinkler and Standpipe Systems*, 2005 edition.

NFPA 18, *Standard on Wetting Agents*, 2006 edition.

NFPA 42, *Code for the Storage of Pyroxylin Plastic*, 2002 edition.

NFPA 53, *Recommended Practice on Materials, Equipment, and Systems Used in Oxygen-Enriched Atmospheres*, 2004 edition.

NFPA 70A, *Electrical Code for One- and Two-Family Dwellings*, 2002 edition.

NFPA 70B, *Recommended Practice for Electrical Equipment Maintenance*, 2002 edition.

NFPA 70E, *Standard for Electrical Safety in the Workplace*, 2004 edition.

NFPA 73, *Electrical Inspection Code for Existing Dwellings*, 2006 edition.

NFPA 75, *Standard for the Protection of Information Technology Equipment*, 2003 edition.

NFPA 76, *Standard for the Fire Protection of Telecommunications Facilities*, 2005 edition.

NFPA 79, *Electrical Standard for Industrial Machinery*, 2002 edition.

NFPA 85, *Boiler and Combustion Systems Hazards Code*, 2004 edition.

NFPA 92B, *Standard for Smoke Management Systems in Malls, Atria, and Large Spaces*, 2005 edition.

NFPA 99B, *Standard for Hypobaric Facilities*, 2005 edition.

NFPA 99C, *Standard on Gas and Vacuum Systems*, 2005 edition.

NFPA 101A, *Guide on Alternative Approaches to Life Safety*, 2004 edition.

NFPA 101B, *Code for Means of Egress for Buildings and Structures*, 2002 edition.

NFPA 115, *Standard for Laser Fire Protection*, 2003 edition.

NFPA 122, *Standard for Fire Prevention and Control in Metal/Nonmetal Mining and Metal Mineral Processing Facilities*, 2004 edition.

NFPA 130, *Standard for Fixed Guideway Transit and Passenger Rail Systems*, 2003 edition.

NFPA 150, *Standard on Fire Safety in Racetrack Stables*, 2000 edition.

NFPA 214, *Standard on Water-Cooling Towers*, 2005 edition.

NFPA 260, *Standard Methods of Tests and Classification System for Cigarette Ignition Resistance of Components of Upholstered Furniture*, 2003 edition.

NFPA 262, *Standard Method of Test for Flame Travel and Smoke of Wires and Cables for Use in Air-Handling Spaces*, 2002 edition.

NFPA 269, *Standard Test Method for Developing Toxic Potency Data for Use in Fire Hazard Modeling*, 2000 edition.

NFPA 270, *Standard Test Method for Measurement of Smoke Obscuration Using a Conical Radiant Source in a Single Closed Chamber*, 2002 edition.

NFPA 271, *Standard Method of Test for Heat and Visible Smoke Release Rates for Materials and Products Using an Oxygen Consumption Calorimeter*, 2004 edition.

NFPA 272, *Standard Method of Test for Heat and Visible Smoke Release Rates for Upholstered Furniture Components or Composites and Mattresses Using an Oxygen Consumption Calorimeter*, 2003 edition.

NFPA 286, *Standard Methods of Fire Tests for Evaluating Contribution of Wall and Ceiling Interior Finish to Room Fire Growth*, 2006 edition.

NFPA 287, *Standard Test Methods for Measurement of Flammability of Materials in Cleanrooms Using a Fire Propagation Apparatus (FPA)*, 2001 edition.

NFPA 288, *Standard Methods of Fire Tests of Floor Fire Door Assemblies Installed Horizontally in Fire Resistance–Rated Floor Systems*, 2001 edition.

NFPA 291, *Recommended Practice for Fire Flow Testing and Marking of Hydrants*, 2002 edition.

NFPA 301, *Code for Safety to Life from Fire on Merchant Vessels*, 2001 edition.

NFPA 306, *Standard for the Control of Gas Hazards on Vessels*, 2003 edition.

NFPA 326, *Standard for the Safeguarding of Tanks and Containers for Entry, Cleaning, or Repair*, 2005 edition.

NFPA 408, *Standard for Aircraft Hand Portable Fire Extinguishers*, 2004 edition.

NFPA 412, *Standard for Evaluating Aircraft Rescue and Fire-Fighting Foam Equipment*, 2003 edition.

NFPA 423, *Standard for Construction and Protection of Aircraft Engine Test Facilities*, 2004 edition.

NFPA 424, *Guide for Airport/Community Emergency Planning*, 2002 edition.

NFPA 484, *Standard for Combustible Metals*, 2006 edition.

NFPA 499, *Recommended Practice for the Classification of Combustible Dusts and of Hazardous (Classified) Locations for Electrical Installations in Chemical Process Areas*, 2004 edition.

NFPA 502, *Standard for Road Tunnels, Bridges, and Other Limited Access Highways*, 2004 edition.

NFPA 520, *Standard on Subterranean Spaces*, 2005 edition.

NFPA 550, *Guide to the Fire Safety Concepts Tree*, 2002 edition.

NFPA 555, *Guide on Methods for Evaluating Potential for Room Flashover*, 2004 edition.

NFPA 600, *Standard on Industrial Fire Brigades*, 2005 edition.

NFPA 720, *Standard for the Installation of Carbon Monoxide (CO) Warning Equipment in Dwelling Units*, 2005 edition.

NFPA 780, *Standard for the Installation of Lightning Protection Systems*, 2004 edition.

NFPA 804, *Standard for Fire Protection for Advanced Light Water Reactor Electric Generating Plants*, 2001 edition.

NFPA 805, *Performance-Based Standard for Fire Protection for Light Water Reactor Electric Generating Plants*, 2001 edition.

NFPA 820, *Standard for Fire Protection in Wastewater Treatment and Collection Facilities*, 2003 edition.

NFPA 850, *Recommended Practice for Fire Protection for Electric Generating Plants and High Voltage Direct Current Converter Stations*, 2005 edition.

NFPA 851, *Recommended Practice for Fire Protection for Hydroelectric Generating Plants*, 2005 edition.

NFPA 853, *Standard for the Installation of Stationary Fuel Cell Power Systems*, 2003 edition.

NFPA 901, *Standard Classifications for Incident Reporting and Fire Protection Data*, 2001 edition.

NFPA 921, *Guide for Fire and Explosion Investigations*, 2004 edition.

NFPA 1201, *Standard for Providing Emergency Services to the Public*, 2004 edition.

NFPA 1452, *Guide for Training Fire Service Personnel to Conduct Dwelling Fire Safety Surveys*, 2005 edition.

NFPA 1620, *Recommended Practice for Pre-Incident Planning*, 2003 edition.

NFPA 1961, *Standard on Fire Hose*, 2002 edition.

NFPA 1962, *Standard for the Inspection, Care, and Use of Fire Hose, Couplings, and Nozzles and the Service Testing of Fire Hose*, 2003 edition.

NFPA 1964, *Standard for Spray Nozzles*, 2003 edition.

Annex P Informational References

P.1 Referenced Publications. The documents or portions thereof listed in this annex are referenced within the informational sections of this code and are not part of the requirements of this document unless also listed in Chapter 2 for other reasons.

P.1.1 NFPA Publications. National Fire Protection Association, 1 Batterymarch Park, Quincy, MA 02169-7471.

NFPA 10, *Standard for Portable Fire Extinguishers*, 2002 edition.

NFPA 13, *Standard for the Installation of Sprinkler Systems*, 2002 edition.

NFPA 13D, *Standard for the Installation of Sprinkler Systems in One- and Two-Family Dwellings and Manufactured Homes*, 2002 edition.

NFPA 13E, *Recommended Practice for Fire Department Operations in Properties Protected by Sprinkler and Standpipe Systems*, 2005 edition.

NFPA 13R, *Standard for the Installation of Sprinkler Systems in Residential Occupancies up to and Including Four Stories in Height*, 2002 edition.

NFPA 14, *Standard for the Installation of Standpipe and Hose Systems*, 2003 edition.

NFPA 15, *Standard for Water Spray Fixed Systems for Fire Protection*, 2001 edition.

NFPA 18, *Standard on Wetting Agents*, 2006 edition.

NFPA 20, *Standard for the Installation of Stationary Pumps for Fire Protection*, 2003 edition.

NFPA 24, *Standard for the Installation of Private Fire Service Mains and Their Appurtenances*, 2002 edition.

NFPA 25, *Standard for the Inspection, Testing, and Maintenance of Water-Based Fire Protection Systems*, 2002 edition.

NFPA 30, *Flammable and Combustible Liquids Code*, 2003 edition.

NFPA 30A, *Code for Motor Fuel Dispensing Facilities and Repair Garages*, 2003 edition.

NFPA 30B, *Code for the Manufacture and Storage of Aerosol Products*, 2002 edition.

NFPA 31, *Standard for the Installation of Oil-Burning Equipment*, 2001 edition.

NFPA 33, *Standard for Spray Application Using Flammable or Combustible Materials*, 2003 edition.

NFPA 51, *Standard for the Design and Installation of Oxygen–Fuel Gas Systems for Welding, Cutting, and Allied Processes*, 2002 edition.

NFPA 51B, *Standard for Fire Prevention During Welding, Cutting, and Other Hot Work*, 2003 edition.

NFPA 52, *Vehicular Fuel Systems Code*, 2006 edition.

NFPA 55, *Standard for the Storage, Use, and Handling of Compressed Gases and Cryogenic Fluids in Portable and Stationary Containers, Cylinders, and Tanks*, 2005 edition.

NFPA 57, *Liquefied Natural Gas (LNG) Vehicular Fuel Systems Code*, 2002 edition.

NFPA 58, *Liquefied Petroleum Gas Code*, 2004 edition.

NFPA 59A, *Standard for the Production, Storage, and Handling of Liquefied Natural Gas (LNG)*, 2006 edition.

NFPA 68, *Guide for Venting of Deflagrations*, 2002 edition.

NFPA 70, *National Electrical Code®*, 2005 edition.

NFPA 72®, *National Fire Alarm Code®*, 2002 edition.

NFPA 77, *Recommended Practice on Static Electricity*, 2000 edition.

NFPA 80, *Standard for Fire Doors and Fire Windows*, 1999 edition.

NFPA 80A, *Recommended Practice for Protection of Buildings from Exterior Fire Exposures*, 2001 edition.

NFPA 82, *Standard on Incinerators and Waste and Linen Handling Systems and Equipment*, 2004 edition.

NFPA 86, *Standard for Ovens and Furnaces*, 2003 edition.

NFPA 90A, *Standard for the Installation of Air-Conditioning and Ventilating Systems*, 2002 edition.

NFPA 91, *Standard for Exhaust Systems for Air Conveying of Vapors, Gases, Mists, and Noncombustible Particulate Solids*, 2004 edition.

NFPA 92A, *Standard for Smoke-Control Systems Utilizing Barriers and Pressure Differences*, 2006 edition.

NFPA 96, *Standard for Ventilation Control and Fire Protection of Commercial Cooking Operations*, 2004 edition.

NFPA *101®*, *Life Safety Code®*, 2006 edition.

NFPA 102, *Standard for Grandstands, Folding and Telescopic Seating, Tents, and Membrane Structures*, 1995 edition.

NFPA 105, *Standard for the Installation of Smoke Door Assemblies*, 2003 edition.

NFPA 110, *Standard for Emergency and Standby Power Systems*, 2005 edition.

NFPA 170, *Standard for Fire Safety and Emergency Symbols*, 2006 edition.

NFPA 204, *Standard for Smoke and Heat Venting*, 2002 edition.

NFPA 220, *Standard on Types of Building Construction*, 2006 edition.

NFPA 232, *Standard for the Protection of Records*, 2000 edition.

NFPA 241, *Standard for Safeguarding Construction, Alteration, and Demolition Operations*, 2004 edition.

NFPA 251, *Standard Methods of Tests of Fire Resistance of Building Construction and Materials*, 2006 edition.

NFPA 255, *Standard Method of Test of Surface Burning Characteristics of Building Materials*, 2006 edition.

NFPA 259, *Standard Test Method for Potential Heat of Building Materials*, 2003 edition.

NFPA 261, *Standard Method of Test for Determining Resistance of Mock-Up Upholstered Furniture Material Assemblies to Ignition by Smoldering Cigarettes*, 2003 edition.

NFPA 265, *Standard Methods of Fire Tests for Evaluating Room Fire Growth Contribution of Textile Coverings on Full Height Panels and Walls*, 2002 edition.

NFPA 285, *Standard Fire Test Method for Evaluation of Fire Propagation Characteristics of Exterior Non-Load-Bearing Wall Assemblies Containing Combustible Components*, 2006 edition.

NFPA 303, *Fire Protection Standard for Marinas and Boatyards*, 2006 edition.

NFPA 307, *Standard for the Construction and Fire Protection of Marine Terminals, Piers, and Wharves*, 2006 edition.

NFPA 329, *Recommended Practice for Handling Releases of Flammable and Combustible Liquids and Gases*, 2005 edition.

NFPA 385, *Standard for Tank Vehicles for Flammable and Combustible Liquids*, 2000 edition.

NFPA 415, *Standard on Airport Terminal Buildings, Fueling Ramp Drainage, and Loading Walkways*, 2002 edition.

NFPA 418, *Standard for Heliports*, 2001 edition.

NFPA 430, *Code for the Storage of Liquid and Solid Oxidizers*, 2004 edition.

NFPA 432, *Code for the Storage of Organic Peroxide Formulations*, 2002 edition.

NFPA 495, *Explosive Materials Code*, 2006 edition.

NFPA 496, *Standard for Purged and Pressurized Enclosures for Electrical Equipment*, 2003 edition.

NFPA 497, *Recommended Practice for the Classification of Flammable Liquids, Gases, or Vapors and of Hazardous (Classified) Locations for Electrical Installations in Chemical Process Areas*, 2004 edition.

NFPA 505, *Fire Safety Standard for Powered Industrial Trucks Including Type Designations, Areas of Use, Conversions, Maintenance, and Operations*, 2006 edition.

NFPA 600, *Standard on Industrial Fire Brigades*, 2005 edition.

NFPA 601, *Standard for Security Services in Fire Loss Prevention*, 2005 edition.

NFPA 655, *Standard for Prevention of Sulfur Fires and Explosions*, 2001 edition.

NFPA 701, *Standard Methods of Fire Tests for Flame Propagation of Textiles and Films*, 2004 edition.

NFPA 703, *Standard for Fire Retardant–Treated Wood and Fire-Retardant Coatings for Building Materials*, 2006 edition.

NFPA 704, *Standard System for the Identification of the Hazards of Materials for Emergency Response*, 2001 edition.

NFPA 705, *Recommended Practice for a Field Flame Test for Textiles and Films*, 2003 edition.

NFPA 914, *Code for Fire Protection of Historic Structures*, 2001 edition.

NFPA 1122, *Code for Model Rocketry*, 2002 edition.

NFPA 1124, *Code for the Manufacture, Transportation, Storage, and Retail Sales of Fireworks and Pyrotechnic Articles*, 2006 edition.

NFPA 1141, *Standard for Fire Protection in Planned Building Groups*, 2003 edition.

NFPA 1142, *Standard on Water Supplies for Suburban and Rural Fire Fighting*, 2001 edition.

NFPA 1144, *Standard for Protection of Life and Property from Wildfire*, 2002 edition.

NFPA 1221, *Standard for the Installation, Maintenance, and Use of Emergency Services Communications Systems*, 2002 edition.

NFPA 1620, *Recommended Practice for Pre-Incident Planning*, 2003 edition.

NFPA 5000®, *Building Construction and Safety Code®*, 2006 edition.

NFPA *Fire Protection Guide.*

NFPA *Fire Protection Handbook*, 19th edition, 2003.

SFPE *Engineering Guide.*

SFPE *Handbook of Fire Protection Engineering*, 3rd edition, 2002.

P.1.2 Other Publications.

P.1.2.1 AGA Publication. American Gas Association, 400 North Capitol Street N.W., Washington, DC 20001.

LNG Information Book.

P.1.2.2 AIChE Publication. American Institute of Chemical Engineers, Three Park Avenue, New York, NY 10016-5991.

Guidelines for Safe Warehousing of Chemicals.

P.1.2.3 ANSI Publications. American National Standards Institute, Inc., 25 West 43rd Street, 4th Floor, New York, NY 10036.

ANSI A117.1, *American National Standard for Accessible and Usable Buildings and Facilities.*

ANSI Z9.7, *Recirculation of Air from Industrial Process Exhaust Systems.*

P.1.2.4 ANSI/UL Publication. Underwriters Laboratories Inc., 333 Pfingsten Road, Northbrook, IL 60062-2096.

ANSI/UL 711, *Standard for Rating and Fire Testing of Fire Extinguishers*, 1995.

P.1.2.5 API Publications. American Petroleum Institute, 1220 L Street N.W., Washington, DC 20005-4070.

API 620, *Recommended Rules for the Design and Construction of Large, Welded, Low-Pressure Storage Tanks.*

API 650, *Welded Steel Tanks for Oil Storage.*

API 653, *Tank Inspection, Repair, Alteration, and Reconstruction.*

API 2015, *Requirements for Safe Entry and Cleaning of Petroleum Storage Tanks,* 6th ed., 2001.

API 2015A, *Guide for Controlling the Lead Hazard Associated with Tank Entry and Cleaning,* 1982.

API 2015B, *Cleaning Open-Top and Covered Floating-Roof Tanks,* 1981.

API 2218, *Fireproofing Practices in Petroleum and Petrochemical Processing Plants,* 2nd ed., 1999.

API 2350, *Overfill Protection for Storage Tanks in Petroleum Facilities,* 2nd ed., 1996.

API RP 1621, *Recommended Practice for Bulk Liquid Stock Control at Retail Outlets,* 1993.

API RP 2003, *Protection Against Ignitions Arising Out of Static, Lightning, and Stray Currents.*

API/ASME, *Code for Unfired Pressure Vessels.*

P.1.2.6 ASHRAE Publication. American Society of Heating, Refrigerating, and Air Conditioning Engineers, Inc., 1791 Tullie Circle, N.E., Atlanta, GA 30329-2305.

ANSI/ASHRAE 15, *Safety Code for Mechanical Refrigeration,* 1994.

P.1.2.7 ASME Publication. American Society of Mechanical Engineers, Three Park Avenue, New York, NY 10016-5990.

ANSI/ASME B31.8, *Gas Transmission and Distribution Piping Systems.*

P.1.2.8 ASTM Publications. American Society for Testing and Materials, 100 Barr Harbor Drive, West Conshohocken, PA 19428-2959.

ASTM D 92, *Standard Test Method for Flash and Fire Points by Cleveland Open Cup.*

ASTM D 4206, *Standard Test Method for Sustained Burning of Liquid Mixtures by the Setaflash Tester (Open Cup).*

ASTM D 4207, *Standard Test Method for Sustained Burning of Low Viscosity Liquid Mixtures by the Wick Test.*

ASTM E 84, *Standard Test Method for Surface Burning Characteristics of Building Materials.*

ASTM E 119, *Standard Test Methods for Fire Tests of Building Construction and Materials.*

ASTM E 502, *Standard Test Method for Selection and Use of ASTM Standards for the Determination of Flash Point of Chemicals by Closed Cup Method.*

ASTM E 1590, *Standard Test Method for Fire Testing of Mattresses,* 2002.

ASTM E 1226, *Test Method for Pressure and Rate of Pressure Rise for Combustible Dusts.*

ASTM *Manual on Flash Point Standards and Their Use.*

P.1.2.9 AWS Publication. American Welding Society, 550 N.W. LeJeune Road, Miami, FL 33126.

ANSI/AWS F-4.1, *Recommended Safe Practices for the Preparation for Welding and Cutting of Containers and Piping,* 1994.

P.1.2.10 AWWA Publication. American Water Works Association Inc., 6666 West Quincy Avenue, Denver, CO 80235.

AWWA M14, *Backflow Prevention and Cross-Connection Control,* 1990 edition.

P.1.2.11 CGA Publications. Compressed Gas Association, 4221 Walney Road, 5th floor, Chantilly, VA 20151-2923.

CGA C-6 (C-6.3), *Standard for Visual Inspection of Steel Compressed Gas Cylinders.*

CGA C-6.1, *Standards for Visual Inspection of High Pressure Aluminum Compressed Gas Cylinders.*

CGA C-6.2, *Guidelines for Visual Inspection and Requalification of Fiber Reinforced High Pressure Cylinders.*

CGA C-10, *Recommended Procedures for Changes of Gas Service for Compressed Gas Cylinders.*

P.1.2.12 CSFM Publication. California State Fire Marshal Publications, Office of the State Fire Marshal, 1131 S Street, Sacramento, CA 95814.

"Rings of Fire: Fire Prevention & Suppression of Outdoor Tire Piles."

P.1.2.13 FAA Publication. Federal Aviation Administration, Department of Transportation, Washington, DC 20590.

FAA A/C 150/5390-2A, *Heliport Design Advisory Circular.*

P.1.2.14 IAFC Publication. International Association of Fire Chiefs, 4025 Fair Ridge Drive, Suite 300, Fairfax, VA 22033-2968.

Guidelines for the Prevention and Management of Scrap Tire Fires.

P.1.2.15 ICAO Publication. International Civil Aviation Organization, Document Sales Unit, 999 University Street, Montréal, Quebec, Canada, H3C 5H7. sales_unit@icao.int

Technical Instructions.

P.1.2.16 IMO Publication. International Maritime Organization, 4 Albert Embankment, London SE1 7SR, U.K., publications-sales@imo.org.

Dangerous Goods Code.

P.1.2.17 ISO Publication. International Organization for Standardization 1, rue de Varembé, Case postale 56, CH-1211 Geneva 20, Switzerland.

ISO 8115, *Cotton Bales — Dimensions and Density.*

P.1.2.18 NEMA Publication. National Electrical Manufacturers Association, 1300 North 17th Street, Suite 1847, Rosslyn, VA 22209.

Standard 250, *Enclosures for Electrical Equipment.*

P.1.2.19 PEI Publication. Petroleum Equipment Institute, P.O. Box 2380, Tulsa, OK 74101-2380.

PEI RP200, *Recommended Practices for Installation of Aboveground Storage Systems for Motor Vehicle Fueling,* 1996.

P.1.2.20 Scott Specialty Gases Publication. Scott Specialty Gases, 6141 Easton Road, Box 310, Plumsteadville, PA 18949.

Design and Safety Handbook, 2004.

P.1.2.21 State of California Publication. State of California Department of Consumer Affairs Bureau of Home Furnishings and Thermal Insulation, 3485 Orange Grove Avenue, North Highlands, CA 95660-5595.

TB 129, *Flammability Test Procedure for Mattresses for Use in Public Buildings,* October 1992.

P.1.2.22 STI Publications. Steel Tank Institute, 570 Oakwood Road, Lake Zurich, IL 60047.

STI RP 01-69, *Recommended Practice for Control of External Corrosion of Underground or Submerged Metallic Piping Systems.*

STI RP 892-91, *Recommended Practice for Corrosion Protection of Underground Piping Networks Associated with Liquid Storage and Dispensing Systems.*

STI RP 1632, *Cathodic Protection of Underground Petroleum Storage and Piping Systems.*

STI SP 001, *Standard for the Inspection of In-Service Shop Fabricated Aboveground Tanks for Storage of Combustible and Flammable Liquids*, 2003.

P.1.2.23 Transport Canada Publication. Transport Canada, Tower C, Place de Ville, 330 Sparks Street, Ottawa, Ontario K1A 0N5. webfeedback@tc.gc.ca

Transportation of Dangerous Goods.

P.1.2.24 UL Publications. Underwriters Laboratories Inc., 333 Pfingsten Road, Northbrook, IL 60062-2096.

UL 300, *Fire Testing of Fire Extinguishing Systems for Protection of Restaurant Cooking Areas.*

UL 1709, *Standard for Rapid Rise Fire Tests of Protection Materials for Structural Steel.*

UL 1975, *Standard for Fire Tests for Foamed Plastics Used for Decorative Purposes.*

UL 2085, *Standard for Insulated Aboveground Tanks for Flammable and Combustible Liquids.*

P.1.2.25 United Nations Publication. United National Publications, Sales Section, New York, NY 10017.

United Nations Recommendation on Transportation of Dangerous Goods.

P.1.2.26 U.S. Government Publications. U.S. Government Printing Office, Washington, DC 20402.

Title 15, USC 1261, Federal Hazardous Substances Act.

Title 16, Code of Federal Regulations, Part 1500, Commercial Practices, Chapter 11

Title 21, Code of Federal Regulations, GMP for Medical Devices.

Title 29, Code of Federal Regulations, Part 1910, OSHA Regulations for Emergency Procedures and Fire Brigades.

Title 29, Code of Federal Regulations, Labor.

Title 29, Code of Federal Regulations, Part 1910.106.

Title 29, Code of Federal Regulations, Part 1910.1000.

Title 40, Code of Federal Regulations, Part 355, Sections 302 and 304.

Title 49, Code of Federal Regulations, U.S. Department of Transportation, Hazardous Materials Regulations.

Title 49, Code of Federal Regulations, Parts 100–179, Transportation.

Title 49, Code of Federal Regulations, Part 173, Appendix A.

P.1.2.27 Other Publications.

Bachman, K. C., and W. G. Dudek, *Static Electricity in Fueling Superjets*, 1972. Exxon Research and Engineering Co. Brochure, Linden, NJ.

P. J. Wakelyn and S. E. Hughs, "Evaluation of the Flammability of Cotton Bales," *Fire and Materials* Volume 26, pages 183–189 (2002).

"Cotton Ginners Handbook," Agricultural Handbook Number 503, W. S. Anthony and W. D. Mayfield, editors, 1994.

P.2 Informational References. The following documents or portions thereof are listed here as informational resources only. They are not a part of the requirements of this document.

P.2.1 NFPA Publications. National Fire Protection Association, 1 Batterymarch Park, Quincy, MA 02169-7471.

NFPA 13E, *Recommended Practice for Fire Department Operations in Properties Protected by Sprinkler and Standpipe Systems*, 2005 edition.

NFPA 18, *Standard on Wetting Agents*, 2006 edition.

NFPA 42, *Code for the Storage of Pyroxylin Plastic*, 2002 edition.

NFPA 53, *Recommended Practice on Materials, Equipment, and Systems Used in Oxygen-Enriched Atmospheres*, 2004 edition.

NFPA 70, *National Electrical Code®*, 2005 edition.

NFPA 70A, *Electrical Code for One- and Two-Family Dwellings*, 2002 edition.

NFPA 70B, *Recommended Practice for Electrical Equipment Maintenance*, 2002 edition.

NFPA 70E, *Standard for Electrical Safety in the Workplace*, 2004 edition.

NFPA 73, *Electrical Inspection Code for Existing Dwellings*, 2006 edition.

NFPA 75, *Standard for the Protection of Information Technology Equipment*, 2003 edition.

NFPA 76, *Standard for the Fire Protection of Telecommunications Facilities*, 2005 edition.

NFPA 79, *Electrical Standard for Industrial Machinery*, 2002 edition.

NFPA 85, *Boiler and Combustion Systems Hazards Code*, 2004 edition.

NFPA 92B, *Standard for Smoke Management Systems in Malls, Atria, and Large Spaces*, 2005 edition.

NFPA 99B, *Standard for Hypobaric Facilities*, 2005 edition.

NFPA 99C, *Standard on Gas and Vacuum Systems*, 2005 edition.

NFPA 101A, *Guide on Alternative Approaches to Life Safety*, 2004 edition.

NFPA 101B, *Code for Means of Egress for Buildings and Structures*, 2002 edition.

NFPA 115, *Standard for Laser Fire Protection*, 2003 edition.

NFPA 122, *Standard for Fire Prevention and Control in Metal/Nonmetal Mining and Metal Mineral Processing Facilities*, 2004 edition.

NFPA 130, *Standard for Fixed Guideway Transit and Passenger Rail Systems*, 2003 edition.

NFPA 150, *Standard on Fire Safety in Racetrack Stables*, 2000 edition.

NFPA 214, *Standard on Water-Cooling Towers*, 2005 edition.

NFPA 258, *Recommended Practice for Determining Smoke Generation of Solid Materials*, 2001 edition.

NFPA 260, *Standard Methods of Tests and Classification System for Cigarette Ignition Resistance of Components of Upholstered Furniture*, 2003 edition.

NFPA 262, *Standard Method of Test for Flame Travel and Smoke of Wires and Cables for Use in Air-Handling Spaces*, 2002 edition.

NFPA 268, *Standard Test Method for Determining Ignitability of Exterior Wall Assemblies Using a Radiant Heat Energy Source*, 2001 edition.

NFPA 269, *Standard Test Method for Developing Toxic Potency Data for Use in Fire Hazard Modeling*, 2000 edition.

NFPA 270, *Standard Test Method for Measurement of Smoke Obscuration Using a Conical Radiant Source in a Single Closed Chamber*, 2002 edition.

NFPA 271, *Standard Method of Test for Heat and Visible Smoke Release Rates for Materials and Products Using an Oxygen Consumption Calorimeter*, 2004 edition.

NFPA 272, *Standard Method of Test for Heat and Visible Smoke Release Rates for Upholstered Furniture Components or Composites and Mattresses Using an Oxygen Consumption Calorimeter*, 2003 edition.

NFPA 286, *Standard Methods of Fire Tests for Evaluating Contribution of Wall and Ceiling Interior Finish to Room Fire Growth*, 2006 edition.

NFPA 287, *Standard Test Methods for Measurement of Flammability of Materials in Cleanrooms Using a Fire Propagation Apparatus (FPA)*, 2001 edition.

NFPA 288, *Standard Methods of Fire Tests of Floor Fire Door Assemblies Installed Horizontally in Fire Resistance–Rated Floor Systems*, 2001 edition.

NFPA 291, *Recommended Practice for Fire Flow Testing and Marking of Hydrants*, 2002 edition.

NFPA 301, *Code for Safety to Life from Fire on Merchant Vessels*, 2001 edition.

NFPA 306, *Standard for the Control of Gas Hazards on Vessels*, 2003 edition.

NFPA 326, *Standard for the Safeguarding of Tanks and Containers for Entry, Cleaning, or Repair*, 2005 edition.

NFPA 408, *Standard for Aircraft Hand Portable Fire Extinguishers*, 2004 edition.

NFPA 412, *Standard for Evaluating Aircraft Rescue and Fire-Fighting Foam Equipment*, 2003 edition.

NFPA 423, *Standard for Construction and Protection of Aircraft Engine Test Facilities*, 2004 edition.

NFPA 424, *Guide for Airport/Community Emergency Planning*, 2002 edition.

NFPA 484, *Standard for Combustible Metals*, 2006 edition.

NFPA 499, *Recommended Practice for the Classification of Combustible Dusts and of Hazardous (Classified) Locations for Electrical Installations in Chemical Process Areas*, 2004 edition.

NFPA 502, *Standard for Road Tunnels, Bridges, and Other Limited Access Highways*, 2004 edition.

NFPA 520, *Standard on Subterranean Spaces*, 2005 edition.

NFPA 550, *Guide to the Fire Safety Concepts Tree*, 2002 edition.

NFPA 555, *Guide on Methods for Evaluating Potential for Room Flashover*, 2004 edition.

NFPA 600, *Standard on Industrial Fire Brigades*, 2005 edition.

NFPA 720, *Standard for the Installation of Carbon Monoxide (CO) Warning Equipment in Dwelling Units*, 2005 edition.

NFPA 780, *Standard for the Installation of Lightning Protection Systems*, 2004 edition.

NFPA 804, *Standard for Fire Protection for Advanced Light Water Reactor Electric Generating Plants*, 2001 edition.

NFPA 805, *Performance-Based Standard for Fire Protection for Light Water Reactor Electric Generating Plants*, 2001 edition.

NFPA 820, *Standard for Fire Protection in Wastewater Treatment and Collection Facilities*, 2003 edition.

NFPA 850, *Recommended Practice for Fire Protection for Electric Generating Plants and High Voltage Direct Current Converter Stations*, 2005 edition.

NFPA 851, *Recommended Practice for Fire Protection for Hydroelectric Generating Plants*, 2005 edition.

NFPA 853, *Standard for the Installation of Stationary Fuel Cell Power Systems*, 2003 edition.

NFPA 901, *Standard Classifications for Incident Reporting and Fire Protection Data*, 2001 edition.

NFPA 921, *Guide for Fire and Explosion Investigations*, 2004 edition.

NFPA 1201, *Standard for Providing Emergency Services to the Public*, 2004 edition.

NFPA 1452, *Guide for Training Fire Service Personnel to Conduct Dwelling Fire Safety Surveys*, 2005 edition.

NFPA 1620, *Recommended Practice for Pre-Incident Planning*, 2003 edition.

NFPA 1961, *Standard on Fire Hose*, 2002 edition.

NFPA 1962, *Standard for the Inspection, Care, and Use of Fire Hose, Couplings, and Nozzles and the Service Testing of Fire Hose*, 2003 edition.

NFPA 1964, *Standard for Spray Nozzles*, 2003 edition.

P.2.2 Other Publications.

P.2.2.1 CGA Publication. Compressed Gas Association, 4221 Walney Road, 5th Floor, Chantilly, VA 20151-2923.

CGA-C-7, *Guide to the Precautionary Labeling and Marking of Compressed Gas Containers*, 1992.

P.2.2.2 CSA Publication. Canadian Standards Association, 5060 Spectrum Way, Mississauga, Ontario, L4W 5N6, Canada.

CAN-3–B44, *Safety Code for Elevators*, including Supplement No. 1, 1987.

P.2.2.3 Other Publications.

Farm Chemicals Handbook, Meister Publishing Co., Willoughby, OH, 1997.

Introduction to Performance-Based Fire Safety, Society of Fire Protection Engineers, 7315 Wisconsin Avenue, No. 1225W, Bethesda, MD 20814-3202, 2000.

P.3 References for Extracts. The following documents are listed here to provide reference information, including title and edition, for extracts given throughout the nonmandatory sections of this code as indicated by a reference in brackets [ ] following a section or paragraph. These documents are not a part of the requirements of this document unless also listed in Chapter 2 for other reasons.

NFPA 10, *Standard for Portable Fire Extinguishers*, 2002 edition.

NFPA 13, *Standard for the Installation of Sprinkler Systems*, 2002 edition.

NFPA 20, *Standard for the Installation of Stationary Pumps for Fire Protection*, 2003 edition.

NFPA 25, *Standard for the Inspection, Testing, and Maintenance of Water-Based Fire Protection Systems*, 2002 edition.

NFPA 30, *Flammable and Combustible Liquids Code*, 2003 edition.

NFPA 30A, *Code for Motor Fuel Dispensing Facilities and Repair Garages*, 2003 edition.

NFPA 30B, *Code for the Manufacture and Storage of Aerosol Products*, 2002 edition.

NFPA 31, *Standard for the Installation of Oil-Burning Equipment*, 2001 edition.

NFPA 33, *Standard for Spray Application Using Flammable or Combustible Materials*, 2003 edition.

NFPA 45, *Standard on Fire Protection for Laboratories Using Chemicals*, 2004 edition.

NFPA 51B, *Standard for Fire Prevention During Welding, Cutting, and Other Hot Work*, 2003 edition.

NFPA 52, *Vehicular Fuel Systems Code*, 2006 edition.

NFPA 55, *Standard for the Storage, Use, and Handling of Compressed Gases and Cryogenic Fluids in Portable and Stationary Containers, Cylinders, and Tanks*, 2005 edition.

NFPA 58, *Liquefied Petroleum Gas Code*, 2004 edition.

NFPA 61, *Standard for the Prevention of Fires and Dust Explosions in Agricultural and Food Processing Facilities*, 2002 edition.

NFPA 69, *Standard on Explosion Prevention Systems*, 2002 edition.

NFPA 72®, National Fire Alarm Code®, 2002 edition.

NFPA 88A, *Standard for Parking Structures*, 2002 edition.

NFPA 96, *Standard for Ventilation Control and Fire Protection of Commercial Cooking Operations*, 2004 edition.

NFPA 99, *Standard for Health Care Facilities*, 2005 edition.

NFPA *101®, Life Safety Code®*, 2006 edition.

NFPA 101B, *Code for Means of Egress for Buildings and Structures*, 2002 edition.

NFPA 102, *Standard for Grandstands, Folding and Telescopic Seating, Tents, and Membrane Structures*, 1995 edition.

NFPA 140, *Standard on Motion Picture and Television Production Studio Soundstages and Approved Production Facilities*, 2004 edition.

NFPA 220, *Standard on Types of Building Construction*, 2006 edition.

NFPA 241, *Standard for Safeguarding Construction, Alteration, and Demolition Operations*, 2004 edition.

NFPA 303, *Fire Protection Standard for Marinas and Boatyards*, 2006 edition.

NFPA 307, *Standard for the Construction and Fire Protection of Marine Terminals, Piers, and Wharves*, 2006 edition.

NFPA 312, *Standard for Fire Protection of Vessels During Construction, Conversion, Repair, and Lay-Up*, 2006 edition.

NFPA 407, *Standard for Aircraft Fuel Servicing*, 2001 edition.

NFPA 415, *Standard on Airport Terminal Buildings, Fueling Ramp Drainage, and Loading Walkways*, 2002 edition.

NFPA 418, *Standard for Heliports*, 2001 edition.

NFPA 430, *Code for the Storage of Liquid and Solid Oxidizers*, 2004 edition.

NFPA 432, *Code for the Storage of Organic Peroxide Formulations*, 2002 edition.

NFPA 472, *Standard for Professional Competence of Responders to Hazardous Materials Incidents*, 2002 edition.

NFPA 654, *Standard for the Prevention of Fire and Dust Explosions from the Manufacturing, Processing, and Handling of Combustible Particulate Solids*, 2006 edition.

NFPA 914, *Code for Fire Protection of Historic Structures*, 2001 edition.

NFPA 1031, *Standard for Professional Qualifications for Fire Inspector and Plan Examiner*, 2003 edition.

NFPA 1124, *Code for the Manufacture, Transportation, Storage, and Retail Sales of Fireworks and Pyrotechnic Articles*, 2006 edition.

NFPA 5000®, Building Construction and Safety Code®, 2006 edition.

Index

© 2005 National Fire Protection Association. All Rights Reserved.

The copyright in this index is separate and distinct from the copyright in the document that it indexes. The licensing provisions set forth for the document are not applicable to this index. This index may not be reproduced in whole or in part by any means without the express written permission of NFPA.

-A-

Aboveground tanks ..... *see* Tanks
Absolute pressure (definition) 3.3.1, A.3.3.1
Access, fire-fighting ..... 1.1.1(7), 5.3.3(5), 5.3.3(6), 18.1.1.1, 18.2, A.1.1.1(7), A.18.2.2 to A.18.2.4
Aircraft fuel servicing 42.4.2.1.6
Aircraft hangars 21.1.2
Airport terminal buildings 21.2.2.2
Automobile wrecking yards 22.3
Construction sites 16.3.4
Electrical service disconnect 11.1.7, A.11.1.7.1
Fire protection equipment, access to 13.1.4
Fireworks facilities 65.11.3.4, A.65.11.3.4
Flammable and combustible liquids processing 66.5.3.3.4, A.66.5.3.3.4
Forest products, storage of ..... 31.3.3.3.6, 31.3.4.2(3), 31.3.4.3.2, 31.3.5.2(3), 31.3.5.3.3, 31.3.8.3.2, 31.3.8.3.3, A.31.3.8.3.3
Gated communities 18.2.2.2
Heliports, roof-top 21.3.2.2, 21.3.3.3, 21.3.5
Marine motor fuel dispensing facility 42.3.7.3
Special outdoor events, carnivals, and fairs 10.15.2
Storage occupancies 34.3.2, 34.4.3.2, 34.5.4.1
Tires, outside storage of 33.5
Wildland fire-prone areas 17.3.7
Access, limiting 1.7.10.3
Tires, outside storage of 33.6
Wildland fire-prone areas 17.3.3
Access boxes 16.3.4.3, 18.2.2.1
Definition 3.3.2
Additions ..... 1.3.6.3; *see also* Buildings, Under construction
Definition 3.3.3
Aerosol products ..... 60.3.2.3(1), Chap. 61
Classification of 61.2, A.61.2
Definition 3.3.4, A.3.3.4
Marking of 61.3, 61.4.6.1
Mercantile occupancies 61.6
Operations and maintenance 61.7, A.61.7.3.3, A.61.7.7
Permits ..... Table 1.12.20(a), 61.1.2, 61.7.3.3.1
Storage 61.5, A.61.5.1.2, A.61.5.2
Agricultural products, storage of 45.7
Air bag systems 22.9.4
Air-conditioning ..... *see* Heating, ventilating, and air-conditioning (HVAC) systems
Aircraft fuel servicing ..... 21.2.3.3, 42.4, A.42.4.2.1.2.5 to A.42.4.5.21.2(2)
Bonding 42.4.5.4, A.42.4.5.4
Defueling 42.4.5.14
Heliports, rooftop 42.4.4
Internal combustion engine equipment near 42.4.5.6
Occupancy of aircraft during fueling 42.4.5.11
Open flames 42.4.5.8
Operation of aircraft engines and heaters 42.4.5.5
Permit requirements ..... Table 1.12.20(a)
Spills, prevention and control of 42.4.5.2, A.42.4.5.2
Aircraft hangars 21.1
Permits ..... Table 1.12.20(a), 21.1.1
Air-inflated structures 25.5.3, 25.6.5, A.25.5.3.3.1
Airport (aerodrome) ..... Chap. 21
Definition 3.3.5
Fuel systems 42.4.3, A.42.4.3.3.1
Radar equipment 42.4.2.1.4, 42.4.2.1.5, A.42.4.2.1.5
Airport ramps 21.2.3.3, 21.2.3.5, 21.2.5, 42.4.5.7, 42.4.5.8, A.21.2.3.5, A.21.2.5, A.42.4.5.7
Definition 3.3.6
Airport terminal buildings 21.2
Definition 3.3.27.1, A.3.3.27.1
Occupant load factors A.14.8.1.2
Permits ..... Table 1.12.20(a), 21.2.2.1
Air sampling-type detectors ..... 13.7.4.3.11.2 Ex.
Definition 3.3.79.1
Air-supported structures 25.5.3, 25.6.5, A.25.5.3.3.1
Air transfer openings 12.8.6, A.12.8.6.2
Aisles
Aerosol products storage 61.7.4
Baled cotton storage L.3.3
Fireworks retail sales facilities 65.11.8.5, A.65.11.8.5.3
Flammable and combustible liquids storage, handling, and use 66.4.5.2.8, 66.5.3.3.6, 66.5.9.6.5
Flammable solids, outdoor storage 67.2.4
Storage occupancies 34.4.3, 34.7.3.3, 34.8.3.1.4, 34.8.3.2.3, A.34.7.3.3
Unstable (reactive) solids and liquids, outdoor storage of 72.2.2.2
Water-reactive solids and liquids outdoor storage 73.2.2.2
Width
Baled cotton storage L.3.3.2
Definition 3.3.7, A.3.3.7
Fireworks retail sales facilities 65.11.3.14.3.1.1, 65.11.3.14.3.1.2
Flammable solids, outdoor storage 67.2.4
Oxidizers 70.2.6.3.3.1, 70.2.6.3.3.2
Storage occupancies 34.4.3.1, 34.7.3.3, 34.8.3.1.4, 34.8.3.2.3, A.34.7.3.3
Unstable (reactive) solids and liquids, outdoor storage of 72.2.2.2
Water-reactive solids and liquids outdoor storage 73.2.2.2
Alarms
Definition 3.3.8
Door ..... 14.5.2, A.14.5.2.7 to A.14.5.2.11
Waterflow ..... *see* Waterflow alarms
Alarm signals ..... *see* Signals
Alarm systems ..... 13.7, A.13.7.1.4.4; *see also* Notification; Waterflow alarms
Aerosol products storage, use, and handling 61.4.6.5
Airports 21.2.6.3, A.21.2.6.3.2
Assembly occupancies 20.1
Baled cotton storage L.4.5
Central station ..... *see* Central station fire alarm systems
Compressed gas 63.2.7, 63.3.9.6.2, 63.3.9.6.3
Construction sites 16.3.3, A.16.3.3
Cooking equipment ..... 50.4.4.10, 50.4.8, 50.4.9, A.50.4.4.10(4)
Cryogenic fluids 63.2.7
Definition (fire alarm system) 3.3.233.8
Detection and 13.7.1.4.8.5, 13.7.3.5, A.13.7.3.5.3
Educational occupancies 20.2
Emergency command center 11.9.5
Fire pumps ..... 13.4.3, 13.4.5, A.13.4.3, A.13.4.5.1.2, A.13.4.5.2.2(3)
Fireworks facilities 65.11.3.9
Flammable and combustible liquids operations 66.5.9.4, A.66.5.9.4.1
Forest products ..... 31.3.2.3, 31.3.3.2.1(2), 31.3.4.2(2), 31.3.5.2(2), 31.3.8.2(2), A.31.3.2.3

Hazardous material storage and use 60.3.2.7.1, 60.3.2.8.3.11
Health care occupancies 20.4.2, 20.6
Heliports, roof-top 21.3.6.9
Inspection, testing, and maintenance 13.7.3.2.5, 13.7.3.2.7, A.13.7.3.2.7
Integrity, monitoring for 13.7.1.4.3, 13.7.1.4.4, 13.7.3.7, A.13.7.1.4.4, A.13.7.3.7
Manual fire alarm boxes .....*see* Manual fire alarm boxes
Motion picture and television soundstages 32.4.2
Permit requirements ..... Table 1.12.20(a)
Power sources 13.7.3.8
Refrigerant machinery rooms 53.10.2, 53.11
Spray application operations 43.1.7.2.1
Storage occupancies 34.5.5
Tents, membrane structures, grandstands, and folding/telescopic seating 25.1.7
Vacant buildings 10.13.2.1, A.10.13.2.1
Zoning 13.7.1.4.13, A.13.7.1.4.13.2.1, A.13.7.1.4.13.2.2
Alleyways 18.2.4.2.1
Definition 3.3.10
Alterations .....*see* Construction
Alternate fuels ..... 42.2.8, 42.5, 42.8.6.2, A.42.2.8.3.3, A.42.5.1.1 to A.42.5.3
Alternative calculation procedure (definition) 3.4.1
Alternatives to code 1.4, 1.11.1
Definition 3.3.11
Ambulatory health care occupancies ... 20.6, A.20.6.2 to A.20.6.2.5.2
Alarm systems 13.7.2.25, 13.7.2.26
Battery systems, location of 52.3.3.4
Christmas tree provisions ..... Table 10.14.1
Definition 3.3.165.1, 6.1.6.1, A.3.3.165.1, A.6.1.6.1
Emergency plans 10.9.1, 20.6.2.1, 20.6.2.2.2, A.20.6.2.1.2
Extinguishers, portable fire ..... Table 13.6.1.2
Hazardous materials storage and use ..... Table 60.1.3.1, Table 60.1.3.2(b)
Multiple occupancies ..... Table 6.1.14.4.1
Ammonia refrigerant 53.8.4, 53.8.5, 53.9, 53.10.2.2
Ammonium nitrate ..... Table 1.12.20(a), 65.10
Amusement parks ..... Table 1.12.20(a); *see also* Special amusement buildings
Analysis
Sensitivity 5.7.7, 5.7.8
Definition 3.4.2.1
Uncertainty 5.5.3.3
Definition 3.4.2.2
ANSI/ASME (definition) 3.3.12
Apartment buildings 20.9
Christmas tree provisions ..... Table 10.14.1
Definition 6.1.8.1.5, 3.3.165.2, A.3.3.165.2
Detection, alarm, and communication systems 13.7.2.11, 13.7.2.12, A.13.7.2.11.4
Extinguishers, portable fire ..... Table 13.6.1.2
Hazardous materials storage and use ..... Table 60.1.3.2(h), 60.2.6, Table 60.3.2.3
Means of egress, occupant load ..... Table 14.8.1.2
Multiple occupancies ..... Table 6.1.14.4.1
Sprinkler systems 13.3.2.15, 13.3.2.16, A.13.3.2.16.1
Apiaries 17.3.4.5
Appeals
Board of 1.10, A.1.10.9.3
Definition 3.3.24
Means of 1.10.9, A.1.10.9.3
Application of code 1.3, A.1.3.2, A.1.3.6.2
Approvals ..... 1.12, A.1.12.17; *see also* Permits
Fire protection systems 13.1.1, 13.7.3.2.1, 50.2.4, 50.4.11, A.13.7.3.2.1.1, A.13.7.3.2.1.3, A.50.4.11.2
Fire pumps 13.4.1.5
Planned building groups 15.3
Wildland fire-prone areas, use of 17.3.2, A.17.3.2
Approved (definition) 3.2.1, A.3.2.1
Arc welding equipment 41.6
Areas .....*see also* Control areas; Cut-off storage areas; Floor area; Indoor areas; Inside liquid storage areas; Outdoor areas; Sales display area; Smoking areas; Spray areas; Sub-floor work areas
Access to .....*see* Access, fire-fighting
Back stock areas
Aerosol products 61.6.3
Definition 3.3.13.1
Consumer fireworks retail sales area (definition) ..... 3.3.13.2; *see also* Fireworks
Fire area (flammable and combustible liquids) (definition) 3.3.13.4
Organic peroxide storage area (definition) 3.3.13.7
Areas of refuge 20.7.2.1.3, A.20.7.2.1.3
Arson 10.1.4
Artificial barricades .....*see* Barricades
Artwork 20.2.3.4.6, 20.3.3.2.3.4.4
Asbestos removal ..... Table 1.12.20(a), 16.8
ASME (definition) 3.3.14
ASME containers or tanks 69.2.1.1.1, 69.2.1.1.2.2, 69.2.1.1.3, 69.2.1.3.1, 69.2.1.3.2, 69.3.12.3.1.1, 69.3.12.3.1.3, 69.3.12.3.2, 69.3.12.3.4.6, A.69.2.1.1.1
Definition 3.3.65.1
Markings 69.2.1.4.3.3, 69.2.1.4.5
Separation distances 69.3.3.3, 69.3.3.4.2, 69.3.3.4.3
Assemblies, fire-resistant ..... 12.3, A.12.3.2; *see also* Fire door assemblies
Assembly occupancies ..... 20.1, A.20.1.3 to A.20.1.4.8.3
Battery systems, location of 52.3.3.4
Christmas tree provisions ..... Table 10.14.1
Definition 3.3.165.3, 6.1.2.1, A.3.3.165.3, A.6.1.2.1
Detection, alarm, and communication systems 13.7.2.1, 13.7.2.2
Emergency plans 10.9.1
Extinguishers, portable fire ..... Table 13.6.1.2
Flammable and combustible liquids storage 66.4.5.4
Hazardous materials storage and use ..... Table 60.1.3.2(a), 60.2.1, Table 60.2.3
Means of egress, occupant load ..... Table 14.8.1.2
Multiple occupancies ..... 6.1.14.1.3, Table 6.1.14.4.1
Permits 1.12
Small assembly uses 6.1.2.2
Sprinkler systems 13.3.2.5, 13.3.2.6
Assumptions, fire protection ..... 4.2, A.4.2.1 to A.4.2.3
Attached buildings 66.4.4.1, 66.4.4.5.1
Definition 3.3.27.3
Attendants .....*see* Staff
Attics
Sprinklers for ..... Table 13.3.1.8(b)
Storage in 10.19.6
Authority having jurisdiction ..... 1.7, 4.5.1, A.1.7.15.2; *see also* Approvals
Certificate of fitness requirement 1.13
Definition 3.2.2, A.3.2.2
Liability 1.9
Performance-based design, role in ..... 5.1.3 to 5.1.8, 5.3.3(5), 5.4.1.1, 5.4.1.2, 5.4.1.3.1, 5.4.2.8, 5.4.4.4.2, 5.5.1.2, 5.7.2.1, A.5.1.3 to A.5.1.8, A.5.4.1.2, A.5.4.2.8, A.5.4.4.4.2
Plan review 1.14, A.1.4.1
Technical assistance 1.15, 5.1.5, A.1.15, A.5.1.5
Automatic-closing doors 12.8.3.5, 12.9.4.4, 14.5.4, A.12.9.4.4, A.14.5.4.1
Automatic fire extinguishing system .....*see* Extinguishing systems
Automobile wrecking yards ..... Table 1.12.20(a), Chap. 22
Automotive fuel servicing .....*see* Motor fuel dispensing facilities
Available height for storage (definition) 3.3.16, A.3.3.16

-B-

Backflow prevention devices 13.5.3.1, 63.3.3.1.4.2, A.13.5.3
Back stock areas
Aerosol products 61.6.3
Definition 3.3.13.1
Balconies 14.11.4
Charcoal burners on 10.11.7
LP-Gas systems on 69.3.10, A.69.3.10.2.7, A.69.3.10.8.3
Means of egress 14.8.1.6, 14.9.1.1
Baled cotton ..... 34.1.1.2(1), Annex L
Block L.3.2
Definition 3.3.17.1
Definition 3.3.17, A.3.3.17
Densely packed L.1.1, L.1.3.1
Definition 3.3.17.2, A.3.3.17.2
Fire-packed ..... L.1.3.2(2), L.7.10
Definition 3.3.17.3
Freshly ginned bales L.3.4
Naked cotton bales (definition) 3.3.17.4
Yard storage L.5, L.7.7
Baled storage, combustible fibers 45.6
Barrels (bbl) (definition) ..... 3.3.18; *see also* Containers
Barricades ..... Table 60.3.2.6
Artificial (definition) 3.3.19.1
Definition 3.3.19
Fire department access roads 18.2.4.1.4, 18.2.4.2
Natural (definition) 3.3.19.2
Tampering with 10.8.3
Barriers
Emergency scene 1.8.4, 1.8.5
Fire ..... *see* Fire barriers
Smoke ..... *see* Smoke barriers
Basement parking structures 29.1.1
Definition 3.3.165.20.1
Basements 10.12.3.7.2
Aerosol products, storage of 61.5.3.2.1
Definition 3.3.20
Flammable and combustible liquids storage, handling, and use 66.4.4.3.5, 66.4.5.1.4, 66.4.5.2.6, 66.5.3.3.3
Sprinkler systems 13.3.2.2
Unstable reactive compressed gases 63.3.10.4
Batteries (lead-acid)
Baled cotton storage areas L.6.2.1.3
Boat storage and ..... 28.1.8.3.4(2), 28.1.8.3.6, 28.1.8.4
Exposition facilities, vehicles at 20.1.4.5.4.12
Fire alarm system, testing of ..... Table 13.7.3.2.7
Fire pumps 13.4.4.3
Motor vehicle fuel dispensing facilities, use at 42.4.2.2.1
Salvage vehicles, removal from 22.9.5
Valve-regulated (VRLA) 52.3.2
Definition 3.3.21.1, A.3.3.21.1
Vented (flooded) 52.3.1
Definition 3.3.21.2, A.3.3.21.2
Battery systems (lead-acid)
Definition 3.3.22
Permits ..... Table 1.12.20(a), 52.2
Stationary systems ..... Chap. 52
Bedding
Board and care occupancies 20.5.2.5, A.20.5.2.5
Detention and correctional occupancies 20.7.2.4, A.20.7.2.4
Health care occupancies 20.4.2.5, 20.6.2.5, A.20.4.2.5.1, A.20.4.2.5.2, A.20.6.2.5.1
Blasting 17.3.4.3
Bleachers ..... *see* Grandstands
Block L.3.2
Definition 3.3.23
Board and care occupancies, residential ..... *see* Residential board and care occupancies
Board of appeals 1.10, A.1.10.9.3
Definition 3.3.24
Boatyards ..... 28.1, A.28.1.6.2.2 to A.28.1.8.3.3
Boiling point (definition) 3.3.25, A.3.3.25
Boil-over 66.2.3.2.1.3
Definition 3.3.26, A.3.3.26
Bonding, electrical
Aircraft fuel servicing 42.4.2.1.2, 42.4.5.4, A.42.4.2.1.2.5, A.42.4.5.4
Cryogenic fluid containers and systems 63.4.7.3
Marine motor fuel dispensing facilities ..... 42.3.6.4, 42.3.10.7(4), A.42.3.6.4
Spray application operations 43.1.4.6, A.43.1.4.6
Bridges 14.11.4, 18.2.3.4.5
Building codes 10.1.3
Definition 3.3.46.1
Building groups, planned ..... Chap. 15
Definition 3.3.185
Buildings; ..... *see also* Apartment buildings; Attached buildings; Existing buildings; Historic buildings; Planned building groups
Under construction ..... 4.5.6, 5.3.3(10), 10.3.3, 11.1.6, Chap. 16, 69.3.10.3, 69.3.10.4, A.10.3.3
Definition 3.3.27, A.3.3.27
Detached ..... *see* Detached storage
Emergency services buildings, sprinkler systems for 13.3.2.3
Fire flow requirements for ..... Annex H
Important (definition) 3.3.27.6, A.3.3.27.6
Loose house 45.5.6
Definition 3.3.151
Mini-storage ..... *see* Storage occupancies
Private (definition) 3.3.27.8
Safety during building use 4.1.3.2, A.4.1.3.2.1
Performance-based design option 5.4.5, A.5.4.5.1
Satellite (definition) 3.3.27.9
Storage tank (definition) 3.3.27.10
Vacant ..... 5.3.3(8), 10.13, A.10.13.2.1
Wildland fire–prone areas 17.3.5.2
Building services ..... Chap. 11
Baled cotton storage L.6.3
Design/installation 4.4.6
Equipment rooms, storage in 10.19.5
Storage occupancies 34.6.2
Bulk merchandising retail buildings 65.11.1.4, 65.11.8.1.1
Definition 3.3.165.4
Detection, alarm, and communication systems 13.7.2.17.3, 13.7.2.18.3
Sprinkler systems 13.3.2.20.3, 13.3.2.21.2
Bulk oxygen system (definition) 3.3.233.2
Bulk plants or terminals
Definition 3.3.29
Motor fuel dispensing facility at ..... 42.2.3.2.2, 42.3.1.2(1)
Bulk storage ..... 34.1.1.2(3)
Elevators 20.15.4
Oxidizers ..... Table 70.2.6.3.7.2, 70.2.7.3.6, Table 70.2.7.3.7.2, 70.2.8.3.4
Tires 13.3.2.25.5
Burners, kerosene 11.5.2
Burning, open ..... *see* Open fires
Burn-it (definition) 3.3.30
Bury-it (definition) 3.3.31
Business occupancies 20.13
Christmas tree provisions ..... Table 10.14.1
Definition 3.3.165.5, 6.1.11.1, A.3.3.165.5, A.6.1.11.1
Detection, alarm, and communication systems 13.7.2.19, 13.7.2.20
Extinguishers, portable fire ..... Table 13.6.1.2, 20.13.2.2
Flammable and combustible liquids storage 66.4.5.5
Hazardous materials storage and use ..... Table 60.1.3.2(c), 60.2, Table 60.2.3
Means of egress, occupant load ..... Table 14.8.1.2
Multiple occupancies ..... 6.1.14.1.2, 6.1.14.1.3, Table 6.1.14.4.1, A.6.1.14.1.2
Bus repair garages ..... *see* Repair garages

-C-

Calculation procedure, alternative (definition) 3.4.1
Campgrounds 27.2
Candles ..... *see* Open flames
Canopies; ..... *see also* Outdoor areas
Airports 21.2.6.2.4
CNG or LNG motor fuel dispensing facilities 42.2.8.4
Fireworks sales ..... 65.11.1.2, 65.11.3.2, 65.11.3.5, 65.11.3.14.2, A.65.11.3.2, Table 65.11.4.7.2
Flammable and combustible liquids storage 66.4.7.5
Outside storage areas ..... 68.3.4(2)
Permit requirements ..... Table 1.12.20(a)
Sprinkler systems 13.3.2.4, A.13.3.2.4
Carbon dioxide extinguishing systems ..... Table 13.8, 43.1.7.5, 43.1.7.8.2(1), 66.5.9.3.5, A.43.1.7.5
Cargo tank fueling facilities 42.3.9
Cargo vehicles, LP-Gas 69.6
Carnivals ..... Table 1.12.20(a), 10.15
Cartoned storage ..... *see* Storage
Ceiling limit (definition) 3.3.147.1, A.3.3.147.1
Ceiling tiles and ceiling assemblies
Detector installation 13.7.4.3.10
Sprinkler systems 13.3.3.3
Cellulose nitrate film .... Table 1.12.20(a), Table 1.12.20(d), 20.15.6
Cellulose nitrate plastic ..... Table 1.12.20(a), Table 1.12.20(d)
Central station fire alarm systems 13.7.3.4.2.3, 13.7.3.4.2.4
Definition 3.3.233.3
Certificate of fitness 1.13
Definition 3.3.32
Certification, annual, for performance-based design features 5.1.11, A.5.1.11
CFR (definition) 3.3.33
CGA (definition) 3.3.34
Chemical, peroxide forming (definition) 3.3.180
Chemical heat of combustion (definition) 3.3.35
Chemical name (definition) 3.3.36
Chemical plant (definition) 3.3.37
Chips
Definition 3.3.38, A.3.3.38
Outside storage of ..... 31.3.1.1(4), 31.3.2.1.1, 31.3.2.1.6.2, 31.3.6, 31.3.7, A.31.3.2.1.1, A.31.3.6.1 to A.31.3.6.4.3, A.31.3.7
Christmas trees ..... 10.14, Table 10.14.1, A.10.14.3, A.10.14.9.4
Chutes, rubbish or laundry ..... 11.6, Table 12.7.4.2, 16.2.2.4, A.16.2.2.4
Circuits, initiating device (definition) 3.3.144
Citation, code enforcement ..... Annex E
Class A fires
Definition 3.3.101.1
Extinguishers for ..... 13.6.5.2.1.1, 13.6.6.1.2.1 to 13.6.6.1.2.4, 13.6.6.2, A.13.6.5.2.1.1
Class B fires
Definition 3.3.101.2
Extinguishers for 13.6.5.2.1.2, 13.6.6.1.2.2, 13.6.6.1.2.4, 13.6.6.3, 13.6.6.4, A.13.6.5.2.1.2, A.13.6.6.1.2.2, A.13.6.6.3, A.13.6.6.4
Class C fires
Definition 3.3.101.3
Extinguishers for 13.6.5.2.1.3, 13.6.6.1.2.2, 13.6.6.1.2.4, 13.6.6.5, A.13.6.5.2.1.3, A.13.6.6.1.2.2, A.13.6.6.5
Class D fires
Definition 3.3.101.4
Extinguishers for 13.6.5.2.1.4, 13.6.6.1.2.2, 13.6.6.6, A.13.6.5.2.1.4, A.13.6.6.1.2.2
Class K fires
Definition 3.3.101.5
Extinguishers for 13.6.5.2.1.5, 13.6.5.3, 13.6.6.1.2.2, 13.6.6.7, A.13.6.5.3, A.13.6.6.1.2.2
Clean agent extinguishing systems ... Table 13.8, 43.1.7.5, A.43.1.7.5
Clean agent portable fire extinguishers ... 70.2.4.8.4.3, A.70.2.4.8.4.3
Cleaning, cooking equipment 50.5.4, A.50.5.4.2
Cleaning solvents 43.1.8.7, A.43.1.8.7.4
Cleanrooms ..... Chap. 23; *see also* Semiconductor fabrication facilities
Definition 3.3.40
Permits ..... Table 1.12.20(a), 23.3
Clean zones 23.1
Definition 3.3.41
Clearance
Baled cotton storage L.3.5
Brush
Outdoor storage, toxic and highly toxic materials 68.3.3
Wildland urban interface 17.3.5.1.3
Ceiling sprinklers, from storage 10.19.3, 34.4.2, A.34.4.2.2, A.34.4.2.5
Definition 3.3.43
Cooking equipment 50.2.2, A.50.2.2
Idle pallet storage 34.10.3, A.34.10.3
Tire storage 34.8.3.2
Clear space 13.1.4, J.5.1.1, L.2.3, L.5.5
Definition 3.3.42
Closed containers 42.2.3.2.1, 43.1.6.5.1
Definition 3.3.65.2
Closed system use (definition) 3.3.244.1, A.3.3.244.1
Clothes dryers 11.5.1.9
Definition 3.3.44
Clothing storage
Assembly occupancies 20.1.4.11
Day-care occupancies 20.3.3.2.3.4.5
Detention and correctional occupancies 20.7.2.2
Educational occupancies 20.2.3.4.5
Spray application operations 43.1.8.6
Coating processes ..... Table 1.12.20(a), 43.9, A.43.9.1, A.43.9.2
Code
Application 1.3, A.1.3.2, A.1.3.6.2
Building code 10.1.3
Definition 3.3.45.1
Compliance 10.1.3
Conflicts 1.3.3
Definition 3.2.3, A.3.2.3
Electrical code (definition) 3.3.45.2
Enforcement 1.6
Assistance 1.7.4
Interference with 1.7.8
Liability 1.9
Minimum qualifications, enforcement personnel ..... Annex N
Model citation program ..... Annex E
Equivalencies, alternatives, and modifications 1.4, 1.11.1, 4.5.1.2, 4.5.2, 4.5.3, 5.3.5
Footprint A.1.14.1
Interpretations 1.7.3
Life Safety Code® 10.1.2, A.10.1.2
Mechanical code (definition) 3.3.45.3
Plumbing code (definition) 3.3.45.4
Purpose 1.2, A.1.2
Sample ordinance adopting ..... Annex C
Scope ..... 1.1, A.1.1.1(7)
Severability 1.3.7
Violations 1.16, 10.1.4
Model citation program ..... Annex E
Cold deck 31.3.8.3.3, A.31.3.8.3.3
Definition 3.3.46
Column (paper) (definition) 3.3.47
Combustible (definition) 3.3.48
Combustible dusts ..... Chap. 40, 60.3.2.5.1, Table 60.3.2.6
Definition 3.3.49, A.3.3.49
Permits ..... Table 1.12.20(a), 40.2
Combustible fibers ..... *see* Fibers, combustible
Combustible liquids ..... 60.1.1.2, 60.3.2.5.1.1, Chap. 66, Table 60.1.3.1, Tables 60.1.3.2(a) to (h), Table 60.3.2.3, Table 60.3.2.6; *see also* Flammable liquids; Hazardous materials
In buildings under construction ... 16.2.3, A.16.2.3.1.2, A.16.2.3.2.4

Containers ..... *see* Containers
Definition 3.3.148.1
Electrical equipment and systems ..... *see* Electrical equipment and systems
Fire area (definition) 3.3.13.4
Operations ..... 66.5, A.66.5.1.2 to A.66.5.9.4.1
Permits ..... Table 1.12.20(a), Table 1.12.20(d), 66.1.5
Piping systems 66.3
Portable tanks ..... 66.4, A.66.4.2.1(5) to A.66.4.10.2
Secondary containment 60.3.2.8.3.1
Specific occupancies, storage and use in ..... Tables 60.1.3.2(a) to (h), 60.1.3.3.3, 60.2.3.1, 60.2.4, 60.2.5
Spray applications ..... *see* Spray applications, of flammable and combustible materials
Storage of ..... 34.4.4, 43.1.6, 43.1.8.7.6, A.43.1.6.1 to A.43.1.6.5.2; *see also* Liquid storage cabinets
Tank storage ..... 66.2, A.66.2.3.1.1 to A.66.2.5.7.4
Underground releases of 66.7, A.66.7
Combustible material storage ..... *see* Storage
Combustible particulate solid (definition) 3.3.216.1, A.3.3.216.1
Combustible refuse ..... *see* Refuse, combustible
Combustible vegetation ..... *see* Vegetation, combustible
Combustible waste ..... *see* Waste, combustible
Combustion (definition) 3.3.55
Command center, emergency 11.9
Commodities
Classes 34.2.5
Classification of 34.2, A.34.2.7
Paper, rolled 34.2.7, A.34.2.7
Plastics, elastomers, and rubber 34.2.6
Definition 3.3.56
Mixed 34.2.3
Common path of travel 14.10.1.1.4, A.14.10.1.5
Definition 3.3.57, A.3.3.57
Communications systems 13.7, A.13.7.1.4.4
Airports 21.2.6.3, A.21.2.6.3.2
Emergency command center 11.9.4, 11.9.5
Special outdoor events, carnivals, and fairs 10.15.9
Tents, membrane structures, grandstands, and folding/telescopic seating 25.1.7
Compartments
Fire (definition) 3.3.58.1, A.3.3.58.1
Smoke (definition) 3.3.58.2, A.3.3.58.2
Compatible materials (definition) 3.3.157.1
Compliance options 4.3
Compost, storage at yard waste recycling facilities ... 31.3.7, A.31.3.7
Compressed air 63.2.16.2
Compressed gas .... 60.1.2.11.2.3, 60.1.2.17.2(4), 63.1 to 63.3; *see also* Hazardous materials
Building related controls ..... 63.2, A.63.2.8 to A.63.2.10
Compressed natural gas (CNG) vehicular fuel 30.2.9.6, 42.2.8, 42.5.1, 42.8.6.2, A.30.2.9.6, A.42.2.8.3.3, A.42.5.1.1, A.42.5.1.2
Definition 3.3.122.1, A.3.3.122.1
Inflation, use for 63.3.3.1.11
Liquefied (definition) 3.3.122.1.3
Mixtures 63.1.3.3, 63.1.3.4
Definition 3.3.122.1.1
Nonliquefied (definition) 3.3.122.1.4
Permits ..... Table 1.12.20(a), Table 1.12.20(b), 63.1.2
In solution (definition) 3.3.122.1.2
Specific occupancies, storage and use in 60.2.3.1
Compressed gas containers ..... 63.3.1, A.63.3.1.1 to A.63.3.1.10.3
Boat storage and ..... 28.1.8.1.5(2)
CNG vehicle fuel 42.5.1.1.1, 42.5.1.1.2
Definition 3.3.65.3
Leaking 63.3.1.10, 63.3.9.4, A.63.3.1.10.3
Weather protection 63.2.5.2
Compressed gas systems
Compressed natural gas (CNG) vehicular fuel 30.2.9.6, 42.5.1, A.30.2.9.6, A.42.5.1.1, A.42.5.1.1.2
Definition 3.3.233.4
Concealed spaces, storage in 10.19.6
Conditions, existing (definition) 3.3.91
Construction
Aerosol products, buildings for 61.4.2
Airport terminal buildings 21.2.3.1, A.21.2.3.1
Baled cotton storage L.2
Buildings under ..... *see* Buildings
Documents (definition) 3.3.60
Fire safety features 12.2.2
Fireworks retail sales facilities 65.11.3.5
Gas rooms 63.2.4.3
Hazardous materials control areas 60.2.4
Hazardous materials piping ..... 60.1.2.5.1.1(4)
Hazardous materials storage facilities 60.3.2
Heliports, roof-top ..... 21.3, A.21.3.3.1 to A.21.3.6.3
Historic buildings ..... 20.17.3, A.20.17.3(2)
Marine vessels 28.3, A.28.3.1
Motor fuel dispensing facility ... 42.2.6, A.42.2.6.1.4.1 to A.42.2.6.3.6
Occupancy during 4.5.6.1
Organic peroxide storage areas 70.3.4.3, 70.3.5.3
Oxidizer storage areas 70.2.7.4
Repair garages 30.2.3
Roofing kettles 16.7.4
Safeguards during ..... Chap. 16
Spray areas, spray rooms, and spray booths 43.1.3, A.43.1.3.1, A.43.1.3.3
Storage occupancies 34.3, 34.7.2, 34.9.2, A.34.3.1, A34.3.3, A.34.9.2
Types of construction 12.2.1, A.12.2.1
Airport terminal buildings 21.2.3.1, A.21.2.3.1
Storage occupancies 34.3.1, A.34.3.1
Consumer fireworks ..... *see* Fireworks, consumer
Contained, Use Condition V (definition) 3.3.165.8.1.5
Containers ..... *see also* ASME containers or tanks; Closed containers
Aerosol products, disposal of 61.7.5
Compressed gas ..... *see* Compressed gas containers
Cryogenic fluids ..... 63.4, A.63.4.2 to A.63.4.12.2.6.2.1
Definition 3.3.65.5
Definition 3.3.65
Flammable and combustible liquids ..... 43.1.6.3.1, 43.1.6.5, 66.4, 66.4.4.3.9, 66.4.5.2.3, 66.4.5.4, 66.4.5.5.2, 66.4.5.6.5, 66.4.5.6.6, 66.4.7, 66.4.8.1.3, 66.5.3.7.1, 66.5.3.7.4, 66.5.3.7.8, 66.5.3.7.9, 66.5.4.2, 66.5.4.4.1, 66.5.4.5, A.43.1.6.5.2, A.66.4.2.1(5) to A.66.4.10.2, A.66.4.5.2.4, A.66.4.8.1.3, A.66.5.3.7.8, A.66.5.4.5(3)
Definition 3.3.65.4
Hazardous materials 60.1.2.5.1.1, 60.1.2.18, 60.1.2.22.2, 60.3.2.5.1.1, 60.3.2.5.1.2, 60.3.2.7.3
Identification 60.1.2.11.2.1, 60.1.2.11.2.2
Transfer from 60.3.2.8.2
Location 69.5.2.1
LP-Gas ..... *see* LP-Gas containers
Portable
Fuel 42.2.5.3.5, 42.2.7.2.3, 42.2.7.4, 42.3.8, A.42.2.7.2.3.1, A.42.3.8.2
LP-Gas ..... 69.2.1.2, 69.5, A.69.5.4.1 to A.69.5.5
Waste and refuse 19.2.1, 20.4.2.5.8, 34.6.4.1, 43.1.8.5, A.19.2.1.2.1, A.43.1.8.5
Containment ..... *see also* Spillage
Primary (definition) 3.3.187
Vessels 63.3.9.4.2, 63.3.9.4.3
Contents ..... *see* Furnishings
Continuous gas detection system (definition) 3.3.233.5

Control areas 60.1.3.1, 60.1.3.2, 60.1.3.3.1, 60.2.4, 63.2.2, 70.2.9.3.1.1, 70.2.9.3.1.2
Definition 3.3.13.3
Controllers, fire pump ..... 13.4.5, A.13.4.5.1.2, A.13.4.5.2.2(3)
Controls
Emergency .....*see* Emergency controls
Ovens and furnaces 51.3
Conventional pallets ..... Fig. A.34.7.3.1(a), A.37.4.3.1(5)
Definition 3.3.67, A.3.3.67
Conveyors 11.3.5
Aerosol products, buildings for 61.4.2.3
Forest products, storage of 31.3.6.3.8, 31.3.7.4
Spray areas ..... 43.1.3.2, 43.1.7.7.1(1)
Cooking equipment
Assembly occupancies 20.1.4.2, 20.1.4.5.4.9
Clearances 50.2.2, A.50.2.2
Commercial ..... Chap. 50
Concession stands 10.15.8, 50.2.1.9, A.50.2.1.9
Extinguishing systems for 50.6.1.2.2, 50.6.1.2.3, A.50.6.1.2.2
Fireworks facilities 65.11.4.9.3
Grills, location of 10.11.7
LP-Gas 69.3.10.7, 69.3.10.8.4, 69.3.12.8, 69.5.3.2.3
Permit requirements ..... Table 1.12.20(a)
Portable ..... 10.19.7, 20.1.4.2.4, 28.1.9.4(1), A.10.1.4.1.4(5)
Sprinkler systems 13.3.3.10
Tents, membrane structures, grandstands, and folding/telescopic seating 25.1.11, 50.2.1.9, A.50.2.1.9
Ventilation of ..... 11.2.3; *see also* Duct systems
Cooking fires 10.11.3, 10.11.7
Definition 3.3.68
Cooking oil fires, Class K fire extinguishers for 13.6.5.3, A.13.6.5.3
Cords
Extension 11.1.5
Flexible 43.1.4.7
Cordwood (definition) 3.3.69
Core (definition) 3.3.70
Correctional occupancies .....*see* Detention and correctional occupancies
Corridors, exit access ..... Table 12.7.4.2, 14.2, 14.10.1.5, 14.11.4, 60.5.12.2, A.14.10.1.5
Corrosion protection
Cryogenic fluid piping systems 63.4.13.9
Tanks 42.2.3.9, A.42.2.3.9
Corrosive gas ..... 60.3.2.9, 63.1.3.1(2)(a), Table 63.2.3.1, Table 63.3.1.6.2, 63.3.5; *see also* Compressed gas
Definition 3.3.122.2
Permit amounts for ..... Tables 1.12.20(b) to (d)
Corrosives (solids and liquids) ..... 60.1.1.2, 60.1.2, Tables 60.1.3.2(a) to (h), Chap. 64; *see also* Hazardous materials
Definition 3.3.71, A.3.3.71
Permit amounts ..... Table 1.12.20(c), Table 1.12.20(d)
Secondary containment 60.3.2.8.3
Cotton .....*see* Baled cotton
Covered fuses 65.11.3.15.5, 65.11.10.4
Definition 3.3.72, A.3.3.72
Covered plane-loading positions 21.2.6.2.4
Crop maze 10.15.11
Crowd managers 20.1.4.6, A.20.1.4.6
Crude petroleum (definition) 3.3.73
Cryogenic fluids ..... Tables 60.1.3.1(a) to (h), Table 60.3.2.6, 60.3.2.7.3, 63.1, 63.2, 63.4, A.63.1.1.1 to A.63.1.1.3(9), A.63.2.8 to A.63.2.10,A.63.4.2 to A.63.4.12.2.6.2.1; *see also* Hazardous materials
Building related controls ..... 63.2, A.63.2.8 to A.63.2.10
Definition 3.3.74
Permits ..... Table 1.12.20(a), Table 1.12.20(c), Table 1.12.20(d), 63.1.2
Cryogenic fluids containers ..... 63.4, A.63.4.2 to A.63.4.12.2.6.2.1
Definition 3.3.66.5
Cultural properties 20.17.2
Definition 3.3.75, A.3.3.75
Cutoff rooms ..... 34.4.4.1, 66.4.4.1, Table 66.4.4.2.1, 66.4.4.5.1
Definition 3.3.200.1
Cut-off storage areas
Organic peroxide ..... 70.3.3.2, 70.3.4.8.1.1 to 70.3.4.8.1.3, 70.3.6, A.70.3.4.8.1.3, A.70.3.6.2
Oxidizers ..... 70.2.3(2), 70.2.5.3.1, 70.2.5.3.3(1), 70.2.6.3, 70.2.7.3, A.70.2.6.3.4
Cutting and welding .....*see* Hot work operations
Cylinder containment system (definition) 3.3.235.6
Cylinder containment vessel (definition) 3.3.76.1
Cylinders .....*see also* Containers
Compressed gas .....*see* Compressed gas containers
Definition 3.3.76
Extinguishers, portable fire ..... 13.6.6.8.5.4 to 13.6.6.8.5.7, A.13.6.6.8.5.4, A.13.6.6.8.5.6
Hazardous materials 60.1.2.2.22.2, 60.3.2.7.3
Hot work operations 41.3.6, 41.5.5
LP-Gas .....*see* LP-Gas containers

-D-

Dampers
Fire 30.1.6.4, 42.2.6.1.5.4, 61.4.2.1.3
Smoke ..... 12.8.6.2 to 12.8.6.4, 12.9.5, A.12.8.6.2
Data conversion (definition) 3.4.3
Data sources, performance-based design 5.1.6
Day-care homes ..... 20.3.3, A.20.3.3.1.2 to A.20.3.3.2.3.4.5
Definition 3.3.165.6, A.3.3.165.6
Detection, alarm, and communication systems 13.7.2.23.3, 13.7.2.24.3
Hazardous materials storage and use ..... Table 60.3.2.3
Multiple occupancies ..... Table 6.1.14.4.1
Day-care occupancies ..... 20.3, A.20.3.2.2 to A.20.3.3.2.3.4.5
Adult care 20.3.1.5
Battery systems, location of 52.3.3.4
Christmas tree provisions ..... Table 10.14.1
Definition 3.3.165.7, 6.1.4.1, A.3.3.165.7, A.6.1.4.1
Detection, alarm, and communication systems 13.7.2.23, 13.7.2.24
Emergency plans 10.9.1
Extinguishers, portable fire ..... Table 13.6.1.2
Hazardous materials storage and use ..... Table 60.1.3.2(e), Table 60.3.2.3
LP-Gas use in 66.4.5.5
Means of egress, occupant load ..... Table 14.8.1.2
Multiple occupancies ..... Table 6.1.14.4.1
Sprinkler systems 13.3.2.27
Dead-end corridors 14.10.1.5, A.14.10.1.5
Decorations 12.6
Assembly occupancies ..... 20.1.4.4, 20.1.4.4.4.6, 20.1.4.4.4.7, A.20.1.4.4.2 to A.20.1.4.4.6
Board and care occupancies 20.5.2.5, A.20.5.2.5
Day-care occupancies 20.3.3.2.3.4, A.20.3.3.2.3.4.2, A.20.3.3.2.3.4.5
Detention and correctional occupancies 20.7.2.4, A.20.7.2.4
Educational occupancies 20.2.3.4, A.20.2.3.4.2, A.20.3.4.3
Health care occupancies 20.4.2.5, 20.6.2.5, A.20.4.2.5.1, A.20.4.2.5.2, A.20.6.2.5.1
Hotels and dormitories 20.8.2.5, A.20.8.2.5.5
In means of egress 14.4.2
Dedicated smoke control systems (definition) 3.3.233.7
Deep fat fryers 50.6.1.2.4, 50.6.1.2.5, 50.6.2, A.50.4.3.2
Defend-in-place 5.2.2.6
Definitions ..... Chap. 3, 6.1.2 to 6.1.14
Deflagration
Definition 3.3.77
High hazard level 2 contents, deflagration hazard of 60.3.1
Unstable (reactive) solids and liquids, outdoor storage of 72.2.1.1

Delayed-egress locks ..... 14.5.3.1, A.14.5.3.1(3)
Deluge systems ..... Table 13.8
Flammable and combustible liquids storage, handling, and use 66.4.8.2, 66.5.9.3.4, A.66.4.8.2, A.66.5.9.3.4
Highly toxic and toxic solids and liquids storage ..... 68.3.4(1)
Spray application equipment 43.1.7.8.2
Demolition, safeguards during 16.5
Design .....*see* Performance-based design; Prescriptive-based design
Design fire scenarios .....*see* Fire scenarios (design)
Design specifications (definition) 3.4.5, A.3.4.5
Design team (definition) 3.4.6
Detached storage 34.4.4.1, 60.1.2.21, 60.3.3.2
Compressed gases 63.2.5
Definition 3.3.225.3
Organic peroxide formulations 70.3.3.3, 70.3.7, A.70.3.7.2.1
Oxidizers ..... Table 60.4.8, 70.2.3(3), 70.2.5.3.1, 70.2.5.3.3(1), 70.2.6.3.1, 70.2.6.3.3, 70.2.6.4, 70.2.7.3.1, 70.2.7.3.4.2, 70.2.7.5, 70.2.8.3.1
Detection systems ..... 13.7, A.13.7.1.4.4; *see also* Flame detection systems; Gas detection system; Smoke detectors
Alarm systems and 13.7.3.5, A.13.7.3.5.3
Compressed gas 63.3.9.6, 63.3.9.7
Continuous gas detection system (definition) 3.3.234.5
Emergency command center ..... 11.9.5(2)
Flammable and combustible liquids 66.2.2.2.7, 66.5.9.4, A.66.5.9.4.1
Forest products storage, handling, and use ..... 31.3.2.3, 31.3.3.2.1(2), 31.3.4.2(2), 31.3.5.2(2), 31.3.6.2.1(3), 31.3.8.2(2), A.31.3.2.3
Hazardous material storage and use 60.1.2.10, 60.1.2.22.1
Hot work operations ..... 41.3.3.2(11)
Inspection, maintenance, and testing 13.7.4.4
Marinas and boatyards 28.1.6.5
Permits ..... Table 1.12.20(a)
Refrigerant vapor detection 53.10.2, 53.11
Spray application operations 43.1.7.7.1, 43.1.7.8.1
Detectors
Air sampling–type ..... 13.7.4.3.11.2 Ex.
Definition 3.3.78.1
Fixed-temperature detectors (definition) 3.3.78.2, A.3.3.78.2
Heat .....*see* Heat detectors
Line-type .....*see* Line-type detectors
Smoke .....*see* Smoke detectors
Spot-type .....*see* Spot-type detectors
Detention and correctional occupancies ..... 20.7, A.20.7.2.1.2 to A.20.7.2.4.4
Battery systems, location of 52.3.3.4
Christmas tree provisions ..... Table 10.14.1
Definition 3.3.165.8, 6.1.7.1, A.3.3.165.8, A.6.1.7.1
Detection, alarm, and communication systems 13.7.2.7, 13.7.2.8, A.13.7.2.7.2, A.13.7.2.7.3
Doors 14.5.1.1.1
Emergency plans 10.9.1, 20.7.2.1.3, A.20.7.2.1.3
Extinguishers, portable fire ..... Table 13.6.1.2
Hazardous materials storage and use ..... Table 60.1.3.2(g), Table 60.3.2.3
Means of egress, occupant load ..... Table 14.8.1.2
Multiple occupancies ..... Table 6.1.14.4.1
Nonresidential uses 6.1.7.2, A.6.1.7.2
Sprinkler systems 13.3.2.11, 13.3.2.12, A.13.3.2.12.1
Standpipe systems 13.2.2.5
Detention and correctional use conditions (definition) 3.3.165.8.1
Detonation
Definition 3.3.79
High hazard level 1 contents, detonation hazard of 60.3.1.1
Dipping and coating processes 43.9, A.43.9.1, A.43.9.2
Directional signs and indicators 14.14.2, A.14.14.2
Discharge, unauthorized (definition) 3.3.240
Dispensing areas
Cryogenic fluids 63.4.13.10.3
Flammable and combustible liquids inside liquid storage areas 66.4.4.2.7, 66.4.4.5, 66.4.5.2.10
Fuel dispensing, inside buildings 30.1.6, 30.3.1, 42.2.6.1.5, A.30.1.6.7, A.30.1.6.9, A.42.2.6.1.5.7
Dispensing stations .....*see* Motor fuel dispensing facilities
Dispensing systems and devices .....*see* Fuel dispensing systems and devices
Display fireworks .....*see* Fireworks, display
Distilleries 66.5.7
Definition 3.3.80
Distributors (definition) 3.3.81
Documentation .....*see* Records
Doors .....*see also* Opening protectives
Access-controlled 14.5.3.2
Aerosol products, buildings for 61.4.2.1.2
Alarms ..... 14.5.2, A.14.5.2.7 to A.14.5.2.11
Baled cotton storage buildings L.2.3.3, L.2.3.4
Combustible fiber storage room or building 45.5.3.2
Day-care occupancies 20.3.2.2, 20.3.2.3, A.20.3.2.2
Fire door assemblies .....*see* Fire door assemblies
Fireworks facilities 65.11.3.6.1, 65.11.6.4.2
Flammable and combustible liquids inside liquid storage areas ..... 66.4.4.2.2, Table 66.4.4.2.2
Gas cabinets 63.2.17.1.3
Kettle 16.7.3.6
As means of egress ..... 14.5, 14.10.1.3.2, 14.10.1.3.3, 14.10.1.3.5 to 14.10.1.3.7, 14.10.2.2, 14.11.4, A.14.5.1.1 to A.14.5.4.1, A.14.10.1.3.2, A.14.10.2.2
As means of escape 4.5.6.2.2
Motor vehicle fuel dispensing facilities 30.1.6.3, 30.3.2.6, 42.2.6.1.5.3, 42.2.7.2.8
Panic hardware and fire exit hardware 14.5.3.3
Performance-based design option ..... 5.3.4(3)
Repair garages 30.3.2.6
Self-closing .....*see* Self-closing doors
Smoke barriers ..... 12.9.4, A.12.9.4.1 to A.12.9.4.4
Smoke partitions 12.8.3, A.12.8.3.4
Storage occupancies 34.6.6.1
Swing and force to open 14.5.1, A.14.5.1.1, A.14.5.1.4
Dormitories ..... 20.8, 20.8.2.3 to 20.8.2.4.2, A.20.8.2.4.1, A.20.8.2.4.2
Christmas tree provisions ..... Table 10.14.1
Definition 3.3.165.9, 6.1.8.1.4, A.3.3.165.9, A.6.1.8.1.4
Detection, alarm, and communication systems 13.7.2.9, 13.7.2.10, A.13.7.2.9.3
Extinguishers, portable fire ..... Table 13.6.1.2
Hazardous materials storage and use ..... Table 60.1.3.2(h), Table 60.3.2.3
Means of egress, occupant load ..... Table 14.8.1.2
Multiple occupancies ..... Table 6.1.14.4.1
Sprinkler systems 13.3.2.13, 13.3.2.14, A.13.3.2.14.2
DOT
Definition 3.3.82
LP-Gas containers 69.2.1.1.1, 69.2.1.1.2.1, 69.2.1.3.2.3
Drainage systems
Compressed gases and cryogenic fluids 63.2.13, 63.4.12.2.5, A.63.4.12.2.5.4.1
Flammable and combustible liquids 66.4.4.2.5, 66.4.8.5, 66.5.3.5, A.66.4.4.2.5, A.66.4.8.5.1, A.66.5.3.5.1
Hazardous materials storage facility 60.3.2.8.3.12
Motor vehicle fuel dispensing facilities 30.1.4, 30.1.6.9, 42.2.6.1.3, 42.2.6.1.5.9, A.30.1.6.9, A.42.2.6.1.5.9
Repair garages 30.2.5
Tires, outside storage of 33.1.9
Drills .....*see* Fire drills
Driveways (definition) ..... 3.3.83; *see also* Clear space; Fire department access roads
Dry chemical extinguishing systems ..... Table 13.8, 43.1.7.5, 43.1.7.8.2(1), 66.4.8.3, A.43.1.7.5
Drycleaning plants ..... Chap. 24
Permits ..... Table 1.12.20(a), 24.2
Dry pipe sprinkler systems 13.3.3.11, 70.2.4.8.3, A.13.3.3.11, A.70.2.4.8.3

Duct systems
Air-handling ductwork 11.2.1, 12.9.5, 25.1.10.1.3
Openings for 12.7.5.7
Cooking equipment ..... 50.2.1.3(3), 50.2.2.1, 50.2.2.2, 50.3.3, 50.4.3.2, 50.4.4.4, 50.4.4.8.1, 50.4.4.8.6, 50.4.11.1, 50.5.4.2, A.50.4.3.2, A.50.5.4.2
Hazardous materials storage facility 60.3.2.5.7
Motor vehicle fuel dispensing facilities 30.1.6.4, 42.2.6.1.5.4
Spray application operations ..... 43.1.5.4, 43.1.5.6 to 4.3.1.5.9, A.43.1.5.6, A.43.1.5.8
Sprinkler temperature ratings for ..... Table 13.3.1.8(a), Table 13.3.1.8(c)
Dumbwaiters 11.3.5, 12.4.4
Dumpsters, rubbish within 19.2.1.4
Dusts
Combustible .....*see* Combustible dusts
Explosion prevention ..... Table 1.12.20(a), Chap. 40
Wood processing and woodworking facilities 31.3.9
Dwellings, one- and two-family .....*see* One- and two-family dwellings
Dwelling units
Definition 3.3.84
Doors 14.5.1.1.2
One- and two-family
Definition 3.3.165.19.1, 6.1.8.1.1, A.6.1.8.1.1

-E-

Educational occupancies ..... 20.2, A.20.2.2.1 to A.20.2.3.3.1
Battery systems, location of 52.3.3.4
Christmas tree provisions ..... Table 10.14.1
Definition 3.3.165.10, 6.1.3.1, A.3.3.165.10, A.6.1.3.1
Detection, alarm, and communication systems 13.7.2.3, 13.7.2.4
Extinguishers, portable fire ..... Table 13.6.1.2
Flammable and combustible liquids storage 66.4.5.5
Hazardous materials storage and use ..... Table 60.1.3.2, Table 60.3.2.3
Incidental instruction 6.1.3.3
LP-Gas use in 69.3.10.6
Means of egress ..... Table 14.8.1.2, 20.2.3.2, A.20.2.3.2.1
Multiple occupancies ..... Table 6.1.14.4.1
Other occupancies associated with 6.1.3.2
Sprinkler systems 13.3.2.7, 13.3.2.8
Egress, means of .....*see* Means of egress
Elastomers 34.2.6
Electrical code (definition) 3.3.46.2
Electrical equipment and systems .....*see also* Lighting; Wiring
Aerosol products, buildings for 61.4.3
Baled cotton storage areas L.6.3.1.2
Boat storage facilities 28.1.8.1.6, 28.1.9.3.6
Combustible fiber storage rooms or buildings 45.2
Compressed gases and cryogenic fluids 63.2.6, 63.3.1.6.7.1, 63.3.6.4, 63.4.7
Detention and correctional occupancies 20.7.2.3, 20.7.2.6
Disconnects
Emergency disconnects, fuel dispensing systems 42.2.5.7
Fire department access 11.1.7, A.11.1.7.1
Equipment rooms, storage in 10.19.5.1
Fibers, combustible, storage and handling 19.1.6.1
Fires .....*see* Class C fires, extinguishers for
Fire safety 11.1, A.11.1.7.1
Fireworks facilities 65.11.3.16
Flammable and combustible liquids storage, handling, and use 66.2.4.3.5, 66.4.4.2.6, 66.4.6.3.2, 66.5.3.6, 66.5.6.5, 66.6, A.66.6.2.2, A.66.6.2.4
Forest products storage 31.3.2.1.7
Hazardous materials areas 60.1.2.14
Motor vehicle fuel dispensing facilities ..... 42.2.5.7, 42.2.8.6, 42.3.5.1 to 42.3.5.4, 42.3.6, 42.4.2.2, 42.4.5.7, A.42.2.8.6.2, A.42.3.6.2, A42.3.6.4, A.42.4.2.2.4, A.42.4.5.7
Oil-burning appliances, for 11.5.1.7
Oxidizer storage 70.2.4.6
Performance-based design features 5.3.2
Refrigeration, mechanical 53.10.3.2, 53.10.7, 53.12
Special outdoor events, carnivals, and fairs 10.15.7
Spray application operations ..... 43.1.4, 43.8.5, A.43.1.4.1 to A.43.1.4.6, A.43.8.5.3
Tents, membrane structures, grandstands, and folding/telescopic seating 25.1.9, 25.1.10.2
Transmission lines
Clearance of brush from 17.3.5.1, A.17.3.5.1.5
Tire piles, locations of 33.1.7
Electrostatic spray application equipment .....*see* Spray applications, of flammable and combustible materials
Elevator machine rooms 11.3.3, A.11.3.3
Elevators 11.3, A.11.3.3
Bulk storage 20.15.4
Fire fighters' emergency operations 11.3.1
Hoistway doors 12.4.4, 14.9.1.5
Hoistways ..... Table 12.7.4.2
Lobbies 14.9.1.6
Means of egress 14.9.1.5
Testing 11.3.4
Emergency
Definition 3.3.85
Egress drills .....*see* Fire drills
Reporting of 10.7, A.10.7.1.3
Response records 1.11.3
Emergency command center 11.9
Emergency controls 13.7.1.4.13
Compressed gas shutoff 63.3.3.1.12
Fuel dispensing systems power cutoff 42.2.5.7
Fuel shutoff
Aircraft refueling 42.4.4.4, 42.4.5.3
Cooking equipment 50.4.6
LP-Gas shutoff 69.3.8, A.69.3.8.8
Ozone-gas generating equipment G.6, G.7
Refrigeration systems 53.7, 53.10.4, 53.10.5, 53.10.9
Spray application operations 43.1.7.2.2
Emergency forces notification .....*see* Notification
Emergency instructions
Apartment building residents 20.9.2.1
Hotel and dormitory residents/guests 20.8.2.4, A.20.8.2.4.1
Emergency lighting ..... 5.3.4(11), 14.13, 14.14.5.1, A.14.3.1.1, A.14.14.5.1
Fire pump areas 13.4.2.4
Fireworks facilities 65.11.3.14.6, 65.11.4.8.4, 65.11.6.2.3.5
Emergency organization
Hotel 20.8.2.1, 20.8.2.2, 20.8.2.4, A.20.8.2.1.1, A.20.8.2.1.2, A.20.8.2.4.1
Storage occupancies 34.5.4, A.34.5.4.2
Wood chips and hogged material, storage of 31.3.6.3.3.2
Emergency plans 10.9, A.10.9.2
Baled cotton storage L.4.6
Day-care occupancies 20.3.3.2.1, 20.3.3.2.2.2, A.20.3.3.2.1
Detention and correctional occupancies 10.9.1, 20.7.2.1.3, A.20.7.2.1.3
Flammable and combustible liquids storage, handling, and use 66.2.4.6, 66.5.8.4, 66.5.9.5
Hazardous materials management plans D.3
Health care occupancies 10.9.1, 20.4.2.1, 20.4.2.2.2, 20.6.2.1, 20.6.2.2.2, A.20.4.2.1.5, A.20.6.2.1.2
Oxidizer storage facilities 70.2.4.1.2
Residential board and care occupancies 10.9.1, 20.5.2.1
Storage occupancies A.34.6.6.2
Tires, outside storage of 33.3
Wood chips and hogged material, outside storage of 31.3.6.5
Emergency power ..... 11.7.2 to 11.7.4, 11.9.5(7)
Compressed gases and cryogenic fluids 63.2.6.2, 63.3.9.5
Hazardous materials storage and use 60.4.3, 60.5.3
Emergency relief venting (definition) ..... 3.3.86; *see also* Venting
Emergency responder protection 5.2.2.7

Emergency scene
Barriers 1.8.4, 1.8.5
Control of 1.8.2
Emergency services, buildings housing 13.3.2.3
Enclosed parking structures 29.1.1
Definition 3.3.165.20.2
Enclosures ..... *see also* Exhausted enclosures
Exit ..... 14.3, 60.5.12.2, A.14.3.1(1) to A.14.3.3
Exit passageways 14.7.2
Rubbish chutes and laundry chutes 11.6.1
Stairs ..... 14.5.2.7, 14.6, 14.7.3, A.14.5.2.7, A.14.6.2 to A.14.6.4
Engineer, professional (definition) 3.3.191
Equipment rooms, storage in 10.19.5
Equivalency to code 1.4, 1.11.1
Performance-based design option 5.3.5
Escalators 14.11.4
Escape, means of ..... *see* Means of escape
Evacuation ..... 1.7.14, 5.2.2.6, 10.5, A.10.5.2; *see also* Fire drills
Aircraft 42.4.5.11
Compressed gases or cryogenic fluids storage and use 63.2.8, A.63.2.8
Detention and correctional occupancies 20.7.2.1, A.20.7.2.1.2, A.20.7.2.1.3
Fireworks facilities 65.11.3.13, A.65.11.3.13
Health care occupancies 20.4.2.1, 20.4.2.2.1.2, 20.4.2.2.2, 20.6.2.1, 20.6.2.2.1.2, 20.6.2.2.2, A.20.4.2.1.5, A.20.6.2.1.5
Storage occupancies ..... 34.5.4.2(8)
Excess flow control 63.3.3.1.13
Definition 3.3.87
Excess flow valve (definition) 3.3.88
Exhausted enclosures 63.2.18, 63.3.5.3.2
Definition 3.3.89, A.3.3.89
Exhaust systems
Compressed gases and cryogenic fluids ..... 63.2.16.7 to 63.2.16.10, 63.2.17.2.1, 63.2.18, 63.3.9.3.4.3.2(A), 63.3.9.4.1
Gas rooms 63.2.4.2
Cooking equipment 50.2.2.1, 50.2.3, 50.2.4, 50.3.3, 50.4.4.4, 50.4.4.8, 50.4.11.1, 50.5.4, A.50.5.4.2
Flammable and combustible liquids storage, handling, and use 66.2.2.2.6, 66.4.4.2.7
Hazardous materials storage and use 60.3.2.5.2
Motor vehicle fuel dispensing facilities 30.1.6.7, 42.2.6.1.5.7, 42.2.6.2.4, A.30.1.6.7, A.42.2.6.1.5.7
Repair garages 30.2.8.4
Spray application operations ..... 43.1.5, 43.5.3.1, 43.5.3.9, A.43.1.5.3 to A.43.1.5.11
Exhibits ..... 20.1.4.5.2, 20.1.4.5.4, A.20.1.4.5.4.7.1(3)
Hot work 41.5, A.41.5.2.3
LP-Gas, use of 69.3.10.8, A.69.3.10.8.3
Permit requirements ..... Table 1.12.20(a)
Existing (definition) 3.3.90, A.3.3.90
Existing buildings 1.3.6.2, 10.1.1, 10.1.2, A.1.3.6.2, A.10.1.2
Definition 3.3.27.5, A.3.3.27.5
Existing conditions (definition) 3.3.91
Exit access ..... 14.2, 14.10.1, A.14.10.1.1.1 to A.14.10.1.5
Definition ..... 3.3.93; *see also* Means of egress
Exterior ways 14.10.3
Marking of means of egress 14.14.1.5, A.14.14.1.5.2
Protectives, minimum ratings for ..... Table 12.7.4.2
Width of 14.8.3.3, A.14.8.3.3.1.1
Exit discharge 14.7.3, 14.11, A.14.11.1
Definition 3.3.94
Exit passageways 14.7, 14.11.4, A.14.7
Exits ..... 14.3, A.14.3.1(1) to A.14.3.3; *see also* Means of egress
Airport terminal buildings 21.2.5, A.21.2.5
Definition 3.3.92, A.3.3.92
Educational occupancies 20.2.3.3.1, A.20.2.3.3.1
Enclosures ..... 14.3, A.14.3.1(1) to A.14.3.3
Fireworks facilities 65.11.3.14, 65.11.3.19.2, 65.11.4.8, 65.11.5.2, 65.11.6.2.3
Flammable and combustible liquids processing areas ... 66.5.3.3.5, A.66.5.3.3.5
Health care occupancies 20.4.2.3, 20.6.2.3
Horizontal ..... *see* Horizontal exits
Maintenance of ..... *see* Inspection, testing, and maintenance
Mirrors on 14.4.2.3
Obstruction of 14.4.1, A.14.4.1
Storage occupancies 34.8.2.3, A.34.8.2.3
Explosions
Compressed gases or cryogenic fluids storage and use, control for 63.2.9, A.63.2.9
Definition 3.3.95
Dust explosions, prevention of ..... Chap. 40
Hazardous materials storage facility, control at 60.3.2.6
Investigations 1.7.10.1
Organic peroxides, mixing of 43.7.5, 43.7.6, A.43.7.6
Performance-based design option
Design scenarios 5.4.3, A.5.4.3.1
Performance criteria 5.2.2.2, A.5.2.2.2
Property protection 4.1.4, A.4.1.4.2.1, A.4.1.4.2.2
Safety from 4.1.3, A.4.1.3
Spray application of flammable and combustible liquids A.43.1.1
Explosive materials ..... Tables 60.1.3.2(a) to (h), 65.9; *see also* Hazardous materials
Assembly occupancy furnishings or decorations 20.1.4.4.3, A.20.1.4.4.3
Definition 3.3.96, A.3.3.96
Permits ..... Table 1.12.20(a), Table 1.12.20(d), 65.9.2
For repairs or alterations 4.5.6.3
Wildland fire-prone areas 17.3.4.3
Exposition facilities ..... 20.1.4.5, A.20.1.4.4.4.4(3); *see also* Exhibits
Exposure fire (definition) 3.4.7, A.3.4.7
Exposures, protection for ..... *see* Protection for exposures
Extension cords 11.1.5
Extinguishers, portable fire 13.6
Aerosol products storage, use, and handling 61.4.6.3
Aircraft fuel servicing 42.4.5.13, A.42.4.5.13
Airport terminal buildings 21.2.6.6
Assembly occupancies ..... 20.1.4.5.4.9(5)
Automobile wrecking yards 22.6
Baled cotton storage ..... L.4.4.2 to L.4.4.4, L.6.7.3
Buildings under construction 16.3.6, A.16.3.6
Business occupancies 20.13.2.2
Classification, ratings, and performance 3.3.39, 13.6.2, A.13.6.2.2, A.13.6.2.3
Concession stands 10.15.5
Cooking equipment 50.4.12, A.50.4.12.1
Detention and correctional occupancies 20.7.2.1.4
Distribution of 13.6.6
Fireworks facilities 65.11.3.8, 65.11.4.5.2, 65.11.6.2.1
Flammable and combustible liquids storage, handling, and use 66.4.9, 66.5.9.2.1, A.66.5.9.2.1
Forest products, storage of 31.3.6.3.3, 31.3.6.3.4, A.31.6.3.4
Halogenated agent 13.6.5.1.1, A.13.6.5.1.1
Heliports 21.3.6.10
Hot work operations ..... 41.3.3.2(10), 41.5.4.1
Identification of contents 13.6.4, A.13.6.4
Inspection, testing, and maintenance 13.6.6.8
LP-Gas systems and containers 69.3.12.8, 69.5.5, 69.6.1.2, A.69.5.5
Marinas and boatyards 28.1.6.1, 28.1.8.3.1
Membrane structures 25.1.6.3, 25.1.12.3, 25.6.3
Mercantile occupancies 20.12.2.2
Motor vehicle fuel dispensing facilities 42.2.7.2.5.2, 42.3.7.1, 42.4.2.1.7, 42.4.2.4, 42.5.1.8, A.42.4.2.1.7.1
Oxidizer storage ..... 70.2.4.8.4, A.70.2.4.8.4.1 to A.70.2.4.8.4.3
Parade floats 10.17.3
Recharging 13.6.6.8.1.1, 13.6.6.8.1.2, 13.6.6.8.4, A.13.6.6.8.1.2, A.13.6.6.8.4
Repair garages 30.3.2.2
Selection of 13.6.5, A.13.6.5.1
Special outdoor events, carnivals, and fairs 10.15.5, 10.15.10.4
Spray application operations 43.1.7.6

Storage occupancies ..... 34.5.3.1, 34.6.3.3(2), J.7.4
Tampering with 10.8
Tar kettles 16.7.1.6, A.16.7.1.6.2
Tents 25.1.6.3, 25.1.12.3, 25.2.5
Tires, outside storage of 33.4.1.1, 33.4.1.2
Waste disposal sites 19.1.4
Extinguishing systems .....*see also* Sprinkler systems
Airports 21.2.3.5.3, 21.2.6, A.21.2.6
Assembly occupancies ..... 20.1.4.5.4.7, A.20.1.4.5.4.7.1(3)
Automatic fire ..... 50.4.4, A.50.4.4.3, A.50.4.4.10(4)
Definition 3.3.233.1
Baled cotton storage L.4, L.5.6, L.6.7, L.7.5
Buildings under construction ..... 16.4.3, A.16.4.3.1.1 to A.16.4.3.3.2.8
Combustible fibers, storage vaults for 45.5.5.2
Cooking equipment ..... 50.2.1.3(5), 50.4, 50.6.1.2.2, 50.6.1.2.3, A.50.4.2.2 to A.50.4.12.1, A.50.6.1.2.2
Flammable and combustible liquids storage, handling, and use 66.2.4.5, 66.4.8.6
Forest products ..... 31.3.2.1.6.2, 31.3.2.3, 31.3.3.2.1(2), 31.3.4.2(2), 31.3.5.2(2), 31.3.6.2.1(3), 31.3.6.2.1(5), 31.3.7.4, 31.3.8.2(2), A.31.3.2.3
Hazardous material storage and use 60.1.2.10, 60.1.2.22.1
Heliports, roof-top 21.3.6, A.21.3.6.1, A.21.3.6.3
Highly toxic and toxic solids and liquids storage 68.3.4
Hot work operations ..... 4.1.3.3.2(12), 41.2.4.4, 41.3.3.2(11), 41.5.4.1, A.41.2.4.4
Marinas and boatyards 28.1.6.2, 28.1.8.3.3, A.28.1.6.2.2, A.28.1.6.2.4, A.28.1.8.3.3
Motor vehicle fuel dispensing facilities 30.1.5, 30.3.2.3, 42.2.7.2.5.3, 42.3.7.2, A.30.1.5.1
Permit requirements ..... Table 1.12.20(a)
Repair garages 30.2.7, 30.3.2.3
Spray application operations ..... 4.1.7.4 to 4.1.7.8, 43.1.7.1, 43.5.3.1(4), 43.8.3, 60.5.10.1.3, 60.5.10.2.3, A.43.1.7.1, A.43.8.3
Storage occupancies ..... 34.5.1, 34.5.2, 34.5.4.2(8), 34.6.3.3(1), 34.7.2, 34.7.3.4, 34.7.4.2.1(1), A.34.5.1, A.34.7.3.4.1.1
Tents, membrane structures, grandstands, and folding/telescopic seating 25.1.6, A.25.1.6
Waste disposal sites 19.1.4
Extra (high) hazard occupancies
Definition 3.3.39.1
Extinguishers, portable fire 13.6.6.1.3

-F-

Facilities .....*see also* Hazardous materials storage facility
Definition 3.3.97
Fairs ..... Table 1.12.20(a), 10.15
Fans, exhaust ..... 50.2.1.3(4), 50.2.2.1, 50.5.4.2, A.50.5.4.2
Fees ..... Annex F
Fibers, combustible ..... 19.1.6.1, 19.1.7, 34.1.1.2(8), Chap. 45, Tables 60.1.3.2(a) to (h); *see also* Baled cotton
Definition 3.3.50, A.3.3.50
Permits ..... Table 1.12.20(a), Table 1.12.20(d), 45.1.3
Film, cellulose nitrate ..... Table 1.12.20(a), 20.15.6
Fines
Definition 3.3.98
Yard waste recycling facilities, storage at 31.3.7, A.31.3.7
Fire alarm systems .....*see* Alarm systems
Fire area (flammable and combustible liquids) (definition) 3.3.13.4
Fire barriers ..... 12.3, 12.7, 12.9.3, A.12.3.2, A.12.7.1(3) to A.12.7.5.6.3(1)(c)
Aerosol products, buildings for 61.4.2.1
Combustible fibers, storage vaults for 45.5.4
Cryogenic fluids storage and use 63.4.6.2.1
Fireworks facilities 65.11.3.6.1, 65.11.3.6.2, 65.11.3.7, 65.11.4.4.1, 65.11.4.4.2, 65.11.4.4.3, 65.11.5.3
Hazardous materials control areas 60.2.4.1.1
Toxic and highly toxic gases, storage and use areas ... 63.3.9.2.2.1
Fireblocking ..... 12.7.5.6.3, A.12.7.5.6.3(1)(c)
Firebreaks 17.3.7
Fire command center, alarm annunciation at 13.7.1.4.13.3
Fire compartments (definition) 3.3.58.1, A.3.3.58.1
Fire conditions, performance design criteria 5.2.2.1, A.5.2.2.1
Fire control
Flammable and combustible liquids storage, handling, and use 66.2.4.5, 66.5.8
Motor vehicle fuel dispensing facilities 42.2.7.2.5, 42.3.7, A.42.2.7.2.5.4
Tires, outside storage of 33.4, A.33.4.3
Fire dampers .....*see* Dampers
Fire department access roads 16.1.4, 16.1.5, 18.1.1.1, 18.2.3, 18.2.4, 22.3, 31.3.3.3.6, 31.3.8.3.2, A.18.2.3.1.3, A.18.2.3.4.6.2, A.18.2.4
Definition 3.3.106
Fire department operations .....*see also* Access, fire-fighting; Emergency scene
Hazardous materials liaison 60.1.2.8
Obstruction of 1.8.3
Fire door assemblies ..... 12.4, 12.7.3, Table 12.7.4.2, 12.7.4.3, 12.7.4.4, 34.6.6.1, A1.2.4.3, A.12.4.3, A.12.7.3.2, A.12.7.3.6
Aerosol products, buildings for 61.4.2.1.2
Baled cotton storage buildings L.2.3.3, L.2.3.4
Combustible fiber storage room or building 45.5.3.2
Definition 3.3.103
Fireworks facilities 65.11.3.6.1, 65.11.4.4.1
Flammable and combustible liquids inside liquid storage areas ..... 66.4.4.2.2, Table 66.4.4.2.2
Motor vehicle fuel dispensing facilities and repair garages 30.1.6.3, 30.3.2.6, 42.2.7.2.8
Fire drills ..... 5.3.3(2), 10.6, A.10.6
Assembly occupancies 20.1.4.8, A.20.1.4.8
Board and care occupancies 20.5.2.3
Business occupancies 20.13.2.1
Day-care occupancies 20.3.3.2.2, A.20.3.3.2.2.1
Detention and correctional occupancies 20.7.2.1.3.1
Dormitories 20.8.2.3
Educational occupancies 20.2.3.2, A.20.2.3.2.1
Health care occupancies 20.4.2.1, 20.6.2.1, A.20.4.2.1.5, A.20.6.2.1.2
Hotels 20.8.2.1, A.20.8.2.1.1, A.20.8.2.1.2
Mercantile occupancies 20.12.2.1
Fire escapes 4.5.6.2.2
Fire exit hardware 14.5.3.3
Fire flow requirements for buildings ..... Annex H
Fire hazards (definition) ..... 3.3.104; *see also* Ignition sources
Fire hydrants ..... 18.1.1.2, 18.3.3, 18.3.4, 18.3.6, A.18.3.3, Annex I
Airport terminal buildings 21.2.6.4
Baled cotton storage L.4.3, L.5.6.1
Buildings under construction 16.4.3.1.3
Definition 3.3.105, A.3.3.105
Flammable and combustible liquids storage, handling, and use 66.4.8.4, 66.5.9.3.3, A.66.5.9.3.3
Forest products, storage of A.31.3.3.2.2, A.31.3.4.3.1, A.31.3.5.3.2, A.31.3.6.3.5, A.31.3.8.3.4
Marinas and boatyards 28.1.6.4
Obstructions 13.1.3
Organic peroxide storage 70.3.4.6.3
Outdoor storage J.7.2
Oxidizer storage 70.2.4.8.1, A.70.2.4.8.1
Permit requirements ..... Table 1.12.20(a)
Private ..... Table 1.12.20(a)
Fire lanes ..... 3.3.107, A.3.3.107; *see also* Fire department access roads
Fire model 5.7.11, 5.7.12, A.5.7.11
Definition 3.4.8, A.3.4.8
Fire personnel, standby 1.7.15, 10.15.4, A.1.7.15.2
Fireplaces
Commercial 10.11

Outdoor ..... 5.3.3(4), 17.3.4.7.2, 17.3.4.8, 17.3.4.9
Sprinkler temperature ratings in area of ..... Table 13.3.1.8(c)
Fire point ..... 43.4.1.2, 66.4.1.1.2(5)
Definition 3.3.108
Fire protection assumptions ..... 4.2, A.4.2.1 to A.4.2.3
Fire protection markings ..... 5.3.3(7), 10.12, A.10.12.3
Fire protection systems and equipment ..... Chap. 13; *see also* Extinguishers, portable fire; Extinguishing systems; Fire pumps; Standpipe systems
Aerosol products storage, use, and handling 61.4.6, 61.5.3.2, 61.6.2.3
Airport terminal buildings 21.2.3.5.3, 21.2.6, A.21.2.6
Buildings, fire flow requirements for ..... Annex H
Buildings under construction ..... 10.3.3, 16.3, A.10.3.3, A.16.3.2.1 to A.16.3.6.6
Compressed gases and cryogenic fluids 63.2.10, 63.2.17.3, 63.2.18.1.3, A.63.2.10
Definition 3.3.233.9
Design/installation 4.4.6
Fireworks facilities 65.11.4.5
Flammable and combustible liquids storage, handling, and use ..... 66.4.8, 66.4.9, 66.5.9, A.66.4.8, A.66.5.9.1.1 to A.66.5.9.4.1
Hazardous material storage and use 60.3.3, 60.4.5, 60.5.5
Heliports, roof-top 21.3.6, A.21.3.6.1, A.21.3.6.3
Highly toxic and toxic solids and liquids storage 68.3.4
LP-Gas systems and containers 69.5.5, 69.6.1.2, A.69.5.5
Manual 20.7.2.1.4
Marinas and boatyards 28.1.6, 28.1.8.3.1, A.28.1.6.2.2, A.28.1.6.2.4
Motion picture and television soundstages 32.4, A.32.4.1.3.1
Motor vehicle fuel dispensing facilities 30.1.5, 30.3.2.2, 30.3.2.3, 42.2.6.1.4, 42.2.7.2.5.2, 42.2.7.2.5.3, 42.3.7.1, 42.3.7.2, 42.4.2.1.6, 42.4.2.1.7, 42.4.2.4, 42.4.4.5, 42.5.2.1, A.30.1.5.1, A.42.2.6.1.4.1, A.42.4.2.1.7.1
Organic peroxide storage 70.3.4.6, 70.3.5.5, 70.3.6.3, A.70.3.4.6.1
Oxidizer storage 70.2.4.8, 70.2.6.3.7.2, 70.2.7.3.7.2, 70.2.8.2, 70.2.9.3, A.70.2.4.8.1, A.70.2.8.2
Performance-based design features
Annual certification 5.1.11, A.5.1.11
Fire service, information transfer to 5.1.9, A.5.1.9
Maintenance 5.1.10, A.5.1.10
Operations and maintenance (O & M) manual 5.1.8, A.5.1.8
Retained prescriptive elements 5.3.1
Repair garages 30.2.7, 30.3.2.2, 30.3.2.3
Spray application operations ..... 43.1.7, 43.5.3.1(4), 43.8.3, A.43.1.7.1 to A.43.1.7.8, A.43.8.3
Storage occupancies ..... 3.7.3.4, 34.5, 34.6.3.3(1), 34.6.6.2, 34.7.2, A.34.5.1, A.34.5.4.2, A.34.6.6.2
Baled cotton L.4, L.5.6, L.6.7
Outdoor ..... Annex J
Tampering with 10.8, 17.3.8
Tents, membrane structures, grandstands, and folding/telescopic seating 25.1.6, A.25.1.6
Vacant buildings 10.13.2, A.10.13.2.1
Fire pumps ..... 11.9.5(8), 13.4, 61.4.6.4.2
Controllers ..... 13.4.5, A.13.4.5.1.2, A.13.4.5.2.2(3)
Foam extinguishing systems 21.3.6.4.1
Inspection, testing, and maintenance ..... 13.4.4, 13.4.6 to 13.4.9, A.13.4.4, A.13.4.6.2, A.13.4.6.4
Permit requirements ..... Table 1.12.20(a)
Fire reporting 10.7.1, A.10.7.1.3
Fire-resistant assemblies 12.3, A.12.3.2
Fire retardants (definition) 3.3.109
Fires
Classifications
Definitions ..... 3.3.99.1 to 3.3.99.5
Extinguishers selected and distributed for ..... 13.6.5.2, 13.6.6.1 to 13.6.6.7, A.13.6.5.2.1.1 to A.13.6.5.2.1.4
Investigations 1.7.10.1
Open ..... *see* Open fires
Property protection 4.1.4, A.4.1.4.2.1, A.4.1.4.2.2
Recreational (definition) 3.3.197
Safety from ..... 4.1.3.1, A.4.1.3.1.1 to A.4.1.3.1.2.5
Fire safety, general ..... Chap. 10
Fire safety equipment ..... *see* Fire protection systems and equipment
Fire scenarios (definition) 3.4.9, A.3.4.9
Fire scenarios (design) 5.4, A.5.4
Assumptions 4.2.2.2, 4.2.3, A.4.2.2, A.4.2.3
Definition 3.9.1
Fire service, information transfer to 5.1.9, A.5.1.9
Fire source, single 4.2.1, A.4.2.1
Firestop systems and devices 12.7.5.1, 12.7.5.6.2
Fire walls ..... 12.3, 12.7.5, 34.6.6.1, 34.8.2.2, 45.7.3, 61.4.2.1, A.12.3.2, A.12.7.5.6.3(1)(c)
Baled cotton storage buildings L.2.3.2, L.2.3.3
Fire watch 16.5.4, A.1.7.15.2
Baled cotton storage L.4.6.5, L.7.8
Definition 3.3.110
Fire protection systems, impaired ..... 13.3.4.3.5.2(3)(b), 13.7.1.4.4, A.13.3.4.3.5.2(3)(b), A.13.7.1.4.4
Hot work operations ..... 41.2.2.5, 41.2.2.6, 41.2.4, 41.3.4, 41.4.1, A.41.2.2.6, A.41.2.4.1 to A.41.2.4.7, A.41.3.4.1 to A.41.3.4.3, A.41.4.1
Storage occupancies ..... 34.5.4.3, 34.6.3.3(4)
Tents, membrane structures, grandstands, and folding/telescopic seating 25.1.8, A.25.1.8
Fire windows ..... 12.4, 12.7.3, Table 12.7.4.2, 12.9.4.5, A.12.4.3, A.12.7.3.2, A.12.7.3.6
Fireworks ..... Chap. 65
Consumer ... Table 1.12.20(d), 60.1.1.2, Tables 60.1.3.2(a) to (h), 65.11, A.65.11.1 to A.65.11.5.1.1
Consumer fireworks retail sales area (definition) 3.3.13.2
Consumer fireworks retail sales facility ..... 65.11, A.65.11.1 to A.65.11.5.1.1
Definition 3.3.63
Consumer fireworks retail sales stand ..... 65.11.1.2(2)(a), 65.11.3.2(1)(b), 65.11.3.5(4), 65.11.3.12.2, 65.11.4.7.2, 65.11.6.2
Definition 3.3.64, A.3.3.64
Definition 3.3.111.1, A.3.3.111.1
Permit requirements ..... Table 1.12.20(a)
Tents and temporary membrane structures ..... 25.1.5.5, 65.11.1.2(2)(b) and (d), 65.11.3.2(1)(b), 65.11.3.5(2), 65.11.3.12.2, 65.11.4.7.2, 65.11.6.2
Wildland fire-prone areas 17.3.4.4
Crop maze, separation from 10.15.11.13
Definition 3.3.111, A.3.3.111
Display ..... Table 1.12.20(a), Table 1.12.20(d), 10.15.11.13.2, 65.2, 65.11.2.4
Definition 3.3.111.2, A.3.3.111.2
Manufacturing 65.5
Prepackaged fireworks merchandise 65.11.3.15.3.3, 65.11.3.15.3.4, 65.11.3.15.3.7, 65.11.3.15.4.3, 65.11.3.15.5.2, 65.11.3.15.6, 65.11.5.1.2, A.65.11.3.15.3.3, A.65.11.3.15.6
Definition 3.3.174, A.3.3.174
Fitness
Certificate of ..... *see* Certificate of fitness
Warrant of 4.5.5
Fixed-temperature detectors (definition) 3.3.78.2, A.3.3.78.2
Flame breaks 65.11.3.15.3, 65.11.4.11, 65.11.5.5, 65.11.15.3, A.65.11.3.15.3
Definition 3.3.112
Flame detection systems 43.1.7.7.1, 43.1.7.8.1
Flame effects before an audience ..... Table 1.12.20(a), 65.4
Flame spread 4.1.4.2.2, A.4.1.4.2.2
Definition 3.3.113
Flame spread index (definition) 3.3.114

Flammable gas ..... 60.1.5.1(1), Table 60.1.3.2(i), 60.3.2.2(3), Table 60.2.6.5, 63.1.3.1(1)(a), 63.1.3.4.2, 63.2.3.1.3, Table 63.2.3.1, Table 63.2.9, 63.2.10.2.2, Table 63.3.1.6.2, 63.3.6; *see also* Compressed gas; Hazardous materials
Aerosol products and 61.4.5
In buildings under construction 16.2.3, A.16.2.3.1.2, A.16.2.3.2.4
Definition 3.3.122.3
Liquefied gas (definition) ..... 3.3.122.4; *see also* Liquefied natural gas (LNG)
Permits ..... Tables 1.12.20(b) to (d)
Refrigerants 53.8.3, 53.8.5
Specific occupancies, storage and use in ... Tables 60.1.3.2(a) to (h)
Tents, membrane structures, grandstands, and folding/telescopic seating 25.1.4
Flammable liquids .... 60.1.1.2, 60.1.3.3.3, 60.3.2.5.1.1, Table 60.1.31 Tables 60.1.3.2(a) to (h), Table 60.3.2.6; *see also* Hazardous materials
Aerosol products and 61.4.5
Baled cotton storage areas L.6.2.1.1
In buildings under construction 16.2.3, A.16.2.3.1.2, A.16.2.3.2.4
Cleaning solvents 43.1.8.7, A.43.1.8.7.4
Containers .....*see* Containers
Definition 3.3.148.2
Electrical equipment and systems .....*see* Electrical equipment and systems
Fire area (definition) 3.3.13.4
Fires .....*see* Class B fires
Marinas and boatyards, use and storage at 28.1.8.1.3, 28.1.8.1.4, 28.1.8.2.2
Motor fuel dispensing facilities and systems ..... 42.2.3, 42.2.5, 42.3.2, A.42.2.3.3.2 to A.42.2.3.9, A.42.2.5.6.3, A.42.3.2.2
Operations ..... 66.5, A.66.5.1.2 to A.66.5.9.4.1
Permits ..... Table 1.12.20(a), Table 1.12.20(c), Table 1.12.20(d), 66.1.5
Piping systems 66.3
Portable tanks ..... 66.4, 66.4.4.3.9, A.66.4.2.1(5) to A.66.4.10.2
Secondary containment 60.3.2.8.3
Solvent extraction ..... Chap. 44
Specific occupancies, storage and use in ..... 60.1.3.3, Tables 60.1.3.2(a) to (h)
Spray applications .....*see* Spray applications, of flammable and combustible materials
Storage of ..... 34.4.4, 43.1.6, 43.1.8.7.6, A.43.1.6.1 to A.43.1.6.5.2; *see also* Liquid storage cabinets
Tank storage ..... 66.2, A.66.2.3.1.1 to A.66.2.5.7.4
Tents, membrane structures, grandstands, and folding/telescopic seating 25.1.4
Underground releases of 66.7, A.66.7
Flammable materials
For repairs or alterations 4.5.6.3
Wildland fire-prone areas 17.3.4, A.17.3.4.6.1, A.17.3.4.7.1
Flammable solids ..... Table 1.12.20(d), Table 60.1.3.1, Tables 60.1.3.2(a) to (h), Chap. 67; *see also* Hazardous materials
Definition 3.3.216.2, A.3.3.216.2
Flammable vapors ..... 60.3.2.5.1; *see also* Flammable gas
Definition 3.3.115
Detection systems 53.10.2, 53.11, 66.2.2.2.7
Flash point ..... 43.5.1.1.3, 60.4.2.5, 66.4.1.1.2(6), 66.4.4.5.1, 66.5.4.2
Definition 3.3.116, A.3.3.116
Drycleaning solvents 24.1.2
Fleet vehicle motor fuel dispensing facility .....*see* Motor fuel dispensing facilities
Flexible plan buildings 20.2.2, 20.3.2.4
Floor area
Gross (definition) 3.3.117.1, A.3.3.117.1
Net (definition) 3.3.117.2
Floors
Hazardous materials storage and use areas 60.5.7
Openings in 4.4.5
Storage occupancies 34.6.6.1
Under-floor detector mounting 13.7.4.3.6, A.13.7.4.3.6
Under-floor storage 10.19.6
Flow control, excess .....*see* Excess flow control
Foam extinguishing systems ..... Table 13.8
Flammable and combustible liquids storage, handling, and use 66.4.8.2, 66.4.8.3, 66.5.9.2.3, 66.5.9.3.5, A.66.4.8.2
Heliports, rooftop 21.3.6, A.21.3.6.1, A.21.3.6.3
Organic peroxide storage A.70.3.4.6.2
Storage occupancies ..... 34.1.1.2(1), 34.5.2, 34.5.4.2(8), 34.5.5.1, 34.7.3.4, 34.7.4.2.1(1), A.34.7.3.4.1.1, M.2
Folding and telescopic seating ..... Table 1.12.20(a), 25.1, 25.4, A.25.1.6, A.25.1.8
Food service operations .....*see* Cooking equipment
Forecasting (definition) 3.3.118
Forest products ..... Chap. 31
Forms, construction 16.4.1, A.16.4.1
Free egress, Use condition I (definition) 3.3.165.8.1.1
Fuel delivery nozzles 42.2.5.6, 42.2.7.5.4, 42.2.7.6.4, 42.3.4.2, 42.3.9.4, 42.4.2.6.3, 42.4.5.2.3, A.42.2.5.6.3
Fuel dispensing areas, inside buildings 30.1.6, 30.3.1, 42.2.6.1.5, A.30.1.6.7, A.30.1.6.9, A.42.2.6.1.5.7
Fuel dispensing stations .....*see* Motor fuel dispensing facilities
Fuel dispensing systems and devices
Compressed natural gas 42.2.8, 42.5.1, 42.8.6.2, A.42.2.8.3.3, A.42.5.1.1, A.42.5.1.2
LNG 42.2.8, 42.5.3, 42.8.6.2, A.42.2.8.3.3, A.42.5.3
LP-Gas 42.2.8, 42.5.2, 42.8.6.2, 69.3.13, A.42.2.5.2.4.2.2, A.42.2.8.3.3, A.42.4.2.2.1
Motor vehicle fuel dispensing facilities 42.2.5, 42.3.4, 42.4.2.6, A.42.2.5.6.3
Fueled equipment, storage of 10.19.7
Fuel load (definition) 3.4.10, A.3.4.10
Fuel tanks .....*see* Tanks, storage
Fugitive emissions (definition) 3.3.119, A.3.3.119
Fundamental requirements 4.4, A.4.4
Furnishings 12.6, 14.8.3.3.1.1, A.14.8.3.3.1.1
Assembly occupancies ..... 20.1.4.4, A.20.1.4.4.2 to A.20.1.4.4.6
Board and care occupancies 20.5.2.5, A.20.5.2.5
Day-care occupancies 20.3.3.2.3.4, A.20.3.3.2.3.4.2
Detention and correctional occupancies 20.7.2.4, A.20.7.2.4
Educational occupancies 20.2.3.3, A.20.2.3.4.2, A.20.3.4.3
Health care occupancies 20.4.2.5, 20.6.2.5, A.20.4.2.5.1, A.20.4.2.5.2, A.20.6.2.5.1, A.20.6.2.5.2
Hotels and dormitories 20.8.2.5, A.20.8.2.5.5
In means of egress 14.4.2
Fuses, covered .....*see* Covered fuses

-G-

Gallon (definition) 3.3.120
Garages
Definition 3.3.121
LP-Gas cargo vehicles 69.6.2
LP-Gas fueled vehicles 42.5.2.7
LP-Gas systems on vehicles 69.3.12.9
Repair .....*see* Repair garages
Gas
Compressed .....*see* Compressed gas
Cooking equipment 10.11.7, 10.19.7
Corrosive .....*see* Corrosive gas
Highly toxic .....*see* Highly toxic gas
Inert 66.5.3.7.4
Definition 3.3.122.6, A.3.3.122.6
Irritant ..... 63.1.3.1(2)(e)
Definition 3.3.122.7
Liquefied .....*see* Liquefied gas
Liquefied natural gas (LNG) .....*see* Liquefied natural gas (LNG)
Liquefied petroleum .....*see* LP-Gas
Nonflammable ..... 63.1.3.1(1)(b)
Definition 3.3.122.11

Other (definition) 3.3.122.12, A.3.3.122.12
Oxidizing ..... *see* Oxidizing gas
Ozone-gas generating equipment ..... Annex G
Permit amounts for ..... Tables 1.12.20(b) to (d)
Pyrophoric ..... *see* Pyrophoric gas
Scavenged (definition) 3.3.122.15
Simple asphyxiant (definition) 3.3.122.16
Toxic ..... *see* Toxic gas
Unstable reactive ..... *see* Unstable (reactive) gas
Gas cabinets 63.2.17, 63.3.5.3.1, 63.3.9.4.1
Definition 3.3.123, A.3.3.123
Hazardous materials identification 60.1.2.11.2.3
Ozone G.4.2
Gas detection system ..... 63.3.9.3.3.1, 63.3.9.3.4.3.2(B), 63.3.9.6
Continuous (definition) 3.3.234.5
Gaseous extinguishing systems ..... 43.1.7.8.2(1)
Gas-fired heating appliances 11.5.1.4
Gas-fired vehicles ..... *see* Motor vehicles
Gas-fueled heating appliances ..... *see* Heating equipment and appliances
Gas manufacturer/producer (definition) 3.3.124
Gas rooms ..... 60.1.2.9.1(2), 63.2.4, 63.3.5.3.3
Definition 3.3.200.2, A.3.3.200.2
Gas turbines 11.7.1
Gated communities, access to 18.2.2.2
General requirements ..... Chap. 4
Generators
Aircraft ground-power 42.4.5.7.2, A.42.4.5.7.2
Fireworks facilities 65.11.3.18, 65.11.4.9.2, A.65.11.4.9.2.4
Membrane structures 25.1.12
Ozone-gas generating equipment ..... Annex G
Stationary ..... 11.7.1, 11.7.4.1, 11.7.4.2, 11.9.5(9)
Glass fiber reinforced plastics ..... 43.8, A.43.8.1 to A.43.8.5.3
Goals 4.1.1, A.4.1
Compliance options 4.3
Performance-based design 5.1.2
Property protection 4.1.1, 4.1.4.1, A.4.1.1
Public welfare 4.1.5.1, A.4.1.5.1
Safety-during-building-use 4.1.3.2.1, A.4.1.3.2.1
Safety-from-fire 4.1.3.1.1, A.4.1.3.1.1
Safety-from-hazardous materials 4.1.3.3.1
Grandstands ..... Table 1.12.20(a), 25.1, 25.3, A.25.1.6, A.25.1.8
Grease removal devices 50.2.2.1, 50.2.2.2, 50.4.3.2, 50.4.4.4, 50.4.4.8.1, 50.4.4.8.6, 50.5.4.2, A.50.4.3.2, A.50.5.4.2
Grounding
Aircraft fueling A.42.4.5.4
Cryogenic fluid containers and systems 63.4.7.3
Marine motor fuel dispensing facilities ..... 42.3.6.4, 42.3.10.7(4), A.42.3.6.4
Spray application operations 43.1.4.6, A.43.1.4.6
Ground kettles (definition) 3.3.126
Guard service ..... 16.3.2.5.1 to 16.3.2.5.3, 28.1.8.2.1, 34.5.6, A.16.3.2.5.1, A.16.3.2.5.2, J.8, L.5.7.3
Guide (definition) 3.2.4

-H-

Halogenated agent extinguishers 13.6.5.1.1, 70.2.4.8.4.2, A.13.6.5.1.1, A.70.2.4.8.4.2
Halon 1301 extinguishing systems ..... Table 13.8, 66.5.9.3.5
Handling (definition) 3.3.127
Hangars ..... *see* Aircraft hangars
Hay, straw, and other agricultural products, storage of 45.7
Hazard of contents ..... *see also* High hazard contents; Ordinary hazard contents
Definition A.3.3.128
Low hazard contents (definition) 3.3.128.2
Hazardous materials ..... Chap. 60; *see also* specific materials
Automobile wrecking yards 22.9
Classification 60.1.2, 63.1.3
Containers ..... *see* Containers
Control areas ..... *see* Control areas
Definition 3.3.156.3
Incidents
Assumptions 4.2.3, A.4.2.3
Investigation 1.7.10.1
Safety, design for 5.2.2.3, A.5.2.2.3
Inventory statements 60.1.2.5.2, A.60.1.2.5.2, D.2
Management plans 60.2.5.1, A.60.1.8.1.1, D.3
Maximum allowable quantities ..... *see* Maximum allowable quantities
Mixtures 60.1.5.2.1.1
Multiple hazards 60.1.2.2
Notification of unauthorized discharge 10.7.2
Outdoor storage and use 60.1.2.21, 60.1.2.24, 60.2.5
Performance-based design option 5.1.12
Design scenarios 5.4.4, A.5.4.4
Performance criteria 5.2.2.3, A.5.2.2.3
Permits ..... Table 1.12.20(a), 60.1.2.3, A.60.1.2.3.1.1
Property protection 4.1.4.2.4
Protection ..... 60.1.2.13, 60.1.2.20, 60.3.1, 60.3.2.1, Table 60.3.2.6
Release of 53.16, 60.1.2.6, A.53.16.2
For repairs or alterations 4.5.6.3
Safety from 4.1.3.3, A.4.1.3.3.2.2
Single release, assumption of 4.2.2, A.4.2.2
Specific occupancies, allowable storage and use in 60.1.3.3.1
Storage cabinets 60.1.2.18, 60.1.2.23
Hazardous materials storage facility 60.1.2.32
Closure of 60.1.2.3.2, 60.1.2.4, 60.1.2.4.3
Definition 3.3.131
Hazardous materials storage lockers 66.4.4.1, 66.4.6, A.66.4.6
Definition 3.3.132
Hazardous production materials (HPM) (definition) 3.3.156.4
Hazardous reaction or hazardous chemical reaction (definition) 3.3.133, A.3.3.133
Hazard rating (definition) 3.3.129, A.3.3.129
Health care occupancies .... 20.4, A.20.4.2; *see also* Ambulatory health care occupancies
Battery systems, location of 52.3.3.4
Christmas tree provisions ..... Table 10.14.1
Definition 3.3.165.11, 6.1.5.1, A.3.3.165.11, A.6.1.5.1
Detection, alarm, and communication systems 13.7.2.5, 13.7.2.6, A.13.7.2.5.3
Emergency plans 10.9.1, 20.4.2.1, 20.4.2.2.2, 20.6.2.1, 20.6.2.2.2, A.20.4.2.1.5, A.20.6.2.1.2
Extinguishers, portable fire ..... Table 13.6.1.2
Hazardous materials storage and use ..... 60.1.3.2, Table 60.1.3.2(b), Table 60.1.3.2(f), Table 60.3.2.3
Laboratories in 26.2, A.26.2
Means of egress ..... Table 14.8.1.2, 20.4.2.3, 20.6.2.3
Sprinkler systems 13.3.2.9, 13.3.2.10
Health hazard materials ..... 60.1.5.1(2), Tables 60.1.3.2(a) to (h), 60.3.2.4, Table 60.4.6.3.1, Table 60.5.10.1.5.2.1, 63.1.3.1(2), A.60.3.2; *see also* Hazardous materials
Definition 3.3.156.5, A.3.3.156.5
Supply piping for 60.1.2.5.1.1, A.60.1.2.5.1.1
Heat detectors 13.7.4.3.4, 13.7.4.5
Definition 3.3.78.3
Heating, ventilating, and air conditioning (HVAC) systems ..... 11.2, 11.9.5(4)
Airport terminal buildings 21.2.3.4, 21.2.4, A.21.2.4.2, A.21.2.4.3
Battery rooms and cabinets 52.3.6
Compressed gases and cryogenic fluids 63.2.16, 63.2.18, 63.3.9.2
Cryogenic fluid containers and systems 63.4.12.1.4, 63.4.13.10.3.2.2
Elevator machine rooms 11.3.3, A.11.3.3
Flammable and combustible liquids storage, handling, and use 66.2.2.2.6, 66.4.4.2.7, 66.4.6.3.4, 66.5.3.4, A.66.5.3.4.2, A.66.5.3.4.4
Gas cabinets 63.2.17.2
Gas rooms 63.2.4.2

Hazardous materials storage and use 60.3.2.5
Motor vehicle fuel dispensing facilities ..... 42.2.6.2, 42.5.1.1.1 to 42.5.1.1.3, A.42.2.6.2, A.42.5.1.1.2
Organic peroxide 70.3.4.4, A.70.3.4.4.2
Refrigerant machinery rooms ..... 53.10.4 to 53.10.6
Repair garages 30.2.8, A.30.2.8
Smoke dampers 12.9.5.3
Spray applications, of flammable and combustible materials ..... 43.1.3.6, 43.1.5, 43.1.6.3.2(4), 43.1.7.3, 43.1.7.7.1(2), 43.5.3.1, 43.5.3.9, 43.8.6, A.43.1.5.3 to A.43.1.5.11
Sprinkler systems for 13.3.3.10

Heating equipment and appliances
Aerosol products, buildings for 61.4.4
Aircraft 42.4.5.5
Compressed gases and cryogenic fluids 63.3.1.6.7
Electric 25.1.10.2
Escape blocked by 20.5.2.5.3
Fireworks facilities 65.11.3.17
Forest products, storage of 31.3.2.1.8, 31.3.2.1.9
Installation 11.5, A.11.5.1.3
Kerosene burners 11.5.2
LP-Gas ..... 69.3.10.2.7, 69.3.10.3.4 to 69.3.10.3.10, 69.3.10.7, 69.3.12.7.4 to 69.3.12.7.6, A.69.3.10.2.7, A.69.3.12.7.6
Oil- and gas-fueled ..... Table 1.12.20(a), 25.1.10.1
Oil stoves 11.5.2
Oxidizer storage 70.2.4.6
Permits 11.5.1.6
Portable 11.5.3, 20.4.2.6, 20.6.2.6, 20.7.2.6 28.1.8.1.1, 69.3.10.2.7, A.69.3.10.2.7
Spray application operations 43.8.5.4
Sprinkler temperature ratings for ..... Table 13.3.1.8(a), Table 13.3.1.8(c)
Temporary 16.2.1, 69.3.10.3.4, 69.3.10.7, A.16.2.1.5, A.16.2.1.8
Tents, membrane structures, grandstands, and folding/telescopic seating 25.1.10
Tires, outside storage of 33.1.6.2
Unvented fuel-fired 20.2.3.5, 20.3.2.1, 20.5.2.5.4, 20.8.2.6, 20.9.2.2, 20.10.2, 20.11.2, 69.3.12.7.6, A.69.3.12.7.6
Vents 11.5.4

Heat-producing appliances
Detention and correctional appliances 20.7.2.3
LP-Gas 69.3.10.2.7, A.69.3.10.2.7
Motor vehicle fuel dispensing facilities 42.2.6.3, A.42.2.6.3.6
Repair garages 30.2.9, A.30.2.9.6

Heliports
Definition 3.3.134, A.3.3.134
Rapid refueling of helicopters ..... 42.4.5.21, A.42.4.5.21.2(2)
Rooftop
Construction and protection ..... 21.3, A.21.3.3.1 to A.21.3.6.3
Fueling at 42.4.4
Permit requirements ..... Table 1.12.20(a), 21.3.2.1

High air movement areas, smoke detectors in 13.7.4.3.11

High hazard contents ..... *see also* Hazardous materials
Definitions 3.3.128.1
Performance-based design option 5.1.12
Storage occupancies ..... Table 6.1.14.4.1, 34.1.1.2(5)

Highly toxic gas ..... 60.3.2.5.1, 63.1.3.1(2)(c), 63.2.3.1.4, Table 63.2.3.1, Table 63.3.1.6.2, 63.3.9, A.63.3.9.3.6; *see also* Compressed gas
Definition 3.3.122.5
Ozone-gas generating equipment ..... Annex G
Permit amounts for ..... Tables 1.12.20(b) to (d)
Refrigerants 53.8.2, 53.8.5
Specific occupancies, storage and use in ..... Table 60.1.3.1

Highly toxic materials (solids and liquids) ..... 60.1.5.1(2)(c), Tables 60.1.3.2(a) to (h), 60.3.2.9, Chap. 68; *see also* Hazardous materials
Definition 3.3.156.6, A.3.3.156.6
Permit amounts for ..... Table 1.12.20(c), Table 1.12.20(d)
Secondary containment 60.3.2.8.3

Highly volatile liquids (definition) 3.3.148.3

High-piled storage ..... Table 1.12.20(a), 13.3.2.25.1, 20.15.7
Definition 3.3.225.4

High-powered rocketry ..... *see* Rockets, model

High-rise buildings 20.16
Definition 3.3.27.6, A.3.3.27.6
Detection, alarm, and communication systems 13.7.2.27.2, A.13.7.2.27.2.1
Emergency plans 10.9.1
Sprinkler systems 13.3.2.14.1, 13.3.2.20.1.2, 13.3.2.24, A.13.3.2.24.2
Standpipe systems 13.2.2.3

High-temperature devices 60.2.9.2

Historic buildings ..... 4.5.2, 20.17, A.20.17.3(2)

Hogged material
Definition 3.3.135
Outside storage of ..... 31.3.1.1(4), 31.3.2.1.6.2, 31.3.6, 31.3.7, A.31.3.6.1 to A.31.3.6.4.3, A.31.3.7
Storage of ..... 31.3.6, A.31.3.6.1 to A.31.3.6.4.3

Hoods
Commercial cooking ..... 50.2.1.3(2), 50.2.2.1, 50.2.2.2, 50.4.3.2, 50.4.4.4, 50.4.4.8, 50.4.10.1, 50.4.11.1, 50.5.4.2, A.50.4.3.2, A.50.5.4.2

Horizontal exits
Definition 3.3.92.1, A.3.3.92.1
Doors in ..... 14.5.1.2(1)
Protectives, minimum ratings for ..... Table 12.7.4.2

Hospitals (definition) ..... 3.3.165.12; *see also* Health care occupancies

Hotels ..... 20.8, A.20.8.2.1.1 to A.20.8.2.5.5
Christmas tree provisions ..... Table 10.14.1
Definition 3.3.165.13, 5.1.8.1.3, A.3.3.165.13, A.6.1.8.1.3
Detection, alarm, and communication systems 13.7.2.9, 13.7.2.10, A.13.7.2.9.3
Extinguishers, portable fire ..... Table 13.6.1.2
Hazardous materials storage and use ..... Table 60.1.3.2(h), Table 60.3.2.3
Means of egress, occupant load ..... Table 14.8.1.2
Multiple occupancies ..... Table 6.1.14.4.1
Sprinkler systems 13.3.2.13, 13.3.2.14, A.13.3.2.14.2

Hot work operations ..... Chap. 41
Aerosol products storage, use, and handling ..... 61.4.6.6.2(6), 61.7.3.1(6), 61.7.3.3, A.61.7.3.3
Automobile wrecking yards 22.4
Baled cotton storage L.6.4
Demolition sites 16.5.2
Fire extinguisher cylinder repair ..... 13.6.6.8.5.4(1), A.13.6.6.8.5.4(1)
Flammable and combustible liquids storage, handling, and use ..... 66.2.4.3.1(6), 66.2.4.3.3, 66.4.10(4), 66.5.6.3, 66.5.6(6), A.66.2.4.3.3, A.66.5.6.3
Forest products, storage of 31.3.2.1.12
Permits ..... Table 1.12.20(a), 41.1.5, 41.2.1.2, 41.2.2, 41.3.1 to 41.3.3, 41.4.2, 43.1.8.12, 61.7.3.3.1, A.41.2.2.3, A.41.2.2.6, A.41.3.2 to A.41.3.3.4, A.43.1.8.12
Personal protective clothing 41.3.7, A.41.3.7
Sole proprietors and individual owners 41.4, A.41.4.1
Spray application operations 43.1.8.12, A.43.1.8.12
Storage occupancies 34.6.3, A.34.6.3.2
Tires, outside storage of 33.1.6.2, 33.7.3
Wildland urban interface, in 17.3.4.6.1, A.17.3.4.6.1

Housekeeping
Automobile wrecking yards 22.5
Fireworks facilities 65.11.3.21, A.65.11.3.21
Forest products, storage of A.31.3.2.2.1, A.31.3.6.3
Motion picture and television soundstages 32.3
Motor vehicle fuel dispensing facilities 42.2.7.2.7
Organic peroxide storage 70.3.4.7, A.70.3.4.7.2
Oxidizer storage 70.2.4.9, A.70.2.4.9.2, A.70.2.4.9.5
Repair garages 30.3.2.5

Hydrants ..... *see* Fire hydrants

-I-

Ignition sources 4.1.4.2.1, A.4.1.2.1
Aerosol products storage, use, and handling 61.4.6.6, 61.7.3, A.61.7.3.3
Compressed gases and cryogenic fluids 63.3.1.6.8, 63.3.6.3
Flammable and combustible liquids storage, handling, and use 66.2.4.3, 66.4.10, 66.5.6, A.66.2.4.3.3, A.66.4.10.1, A.66.5.6.3
Hazardous materials 60.1.12
Motor vehicle fuel dispensing facilities 42.2.7.2.5.1, 42.3.5
Outdoor storage J.1.3
Forest products 31.3.2.1, A.31.3.2.1
Tires 33.1.6, 33.7.3
Spray application, flammable and combustible liquids ..... 43.1.4, 43.1.8.5 to 43.1.8.12, 43.5.3.6, 43.7.6, 43.7.7, 43.8.5, A.43.1.4.1 to A.43.1.4.6, A.43.1.8.5 to A.43.1.8.12, A.43.7.6, A.43.8.5.3
Illumination of means of egress ..... 4.4.3.2.3, 5.3.4(10), 14.12.1.1 to 14.12.2.1, 14.14.5, 14.14.6, 20.1.3.6, A.14.14.5.1, A.14.14.5.2, A.14.14.6.1 to A.14.14.6.5.3; *see also* Emergency lighting
Immediately dangerous to life and health (IDLH) (definition) 3.3.138, A.3.3.138
Imminent danger (definition) 3.3.139
Impeded egress, Use Condition IV (definition) 3.3.165.8.1.4
Important buildings (definition) 3.3.27.7, A.3.3.27.7
Incapacitation (definition) 3.4.11
Incidental liquid use or storage (definition) 3.3.141
Incident commanders
Definition 3.3.140
Duties and powers 1.8
Incinerators ..... 5.3.3(4), 10.11, 11.6, 12.4.3, A.12.4.3
Forest products, storage of 31.3.2.1.10, A.31.3.2.1.10.1
Refrigerant flaring systems 53.8
Tires, outside storage of 33.1.6.3
Wildland fire-prone areas 17.3.4.8, 17.3.4.9
Incompatible materials (definition) 3.3.157.7
Independent review 1.15, 5.1.5, A.1.15, A.5.1.5
Indicating valves (definition) 3.3.245.1
Indoor areas
Compressed gases and cryogenic fluids 63.2.5.2
Definition 3.3.13.5
Hazardous materials 60.2.1, 60.2.2.1, 60.2.3
Industrial occupancies 20.14
Christmas tree provisions ..... Table 10.14.1
Definition 3.3.165.14, 6.1.12.1, A.3.3.165.14, A.6.1.12.1
Detection, alarm, and communication systems 13.7.2.21
Extinguishers, portable fire ..... Table 13.6.1.2
Hazardous materials storage and use ..... Table 60.3.2.3
LP-Gas use in 69.3.10.5, 69.5.3.3
Means of egress, occupant load ..... Table 14.8.1.2
Motor vehicle fuel dispensing facilities .....*see* Motor fuel dispensing facilities
Multiple occupancies ..... 6.1.14.1.2, Table 6.1.14.4.1, A.6.1.14.1.2
Industrial ovens and furnaces ..... Chap. 51, 61.4.6.6.2(12), 61.7.3.1(12)
Flammable and combustible liquids storage, handling, and use ..... 66.2.4.3.1(12), 66.5.6(12)
Permits ..... Table 1.12.20(a), 51.1.2
Industrial trucks 10.18, 42.5.2.5
Aerosol products storage, use, and handling 61.7.2
Baled cotton storage areas L.6.2.1
Combustible fiber storage room or building 45.4
Flammable and combustible liquids storage, handling, and use 66.4.5.6.9, 66.4.10.2, A.66.4.10.2
Spray areas 43.1.3.4
Storage occupancies 34.6.1
Inert gas 66.5.3.7.4
Definition 3.3.124.6
Initiating device circuits (definition) 3.3.143
Input data specification 5.5.3, 5.7.7
Definition 3.4.12
Inside liquid storage areas 66.4.4, 66.4.8, A.66.4.4, A.66.4.8
Definition 3.3.13.6
Other occupancies, in 66.4.5
Inside rooms ..... 66.4.4.1, Table 66.4.4.2.1, 66.4.4.4.2
Definition 3.3.200.3
Inspection, testing, and maintenance 4.5.8, 10.4, A.4.5.8.2, A.10.4.2, A.10.4.3
Aerosol products storage, use, and handling 61.7.6
Aircraft fuel servicing 42.4.5.16, 42.4.5.17, A.42.4.5.16
Alarm systems 13.7.3.2.6, 13.7.3.2.7, 13.7.3.5, A.13.7.3.2.7, A.13.7.3.5.3
Alternatives, test of 1.4.7
Authority having jurisdiction, inspections by 1.7.6, 1.7.12, 1.11.2
Baled cotton storage L.6
Ceiling tiles and ceiling assemblies 13.3.3.3, 13.7.4.3.10
CNG and LNG vehicle fuel dispensing 42.5.1.1.1, 42.5.1.1.3, 42.5.1.1.5, 42.5.1.1.8
Compressed gases storage and use 63.3.1.3.2
Construction and installation, inspection of 1.7.12
Cooking equipment extinguishing and exhaust systems ..... 50.2.1.5, 50.4.4.10(4), 50.5, A.50.4.4.10(4), A.50.5.2.1 to A.50.5.4.2
Cryogenic fluids storage 63.4.13.1.3, 63.4.13.9
Day-care occupancies ..... 20.3.3.2.3, A.20.3.3.2.3.2 to A.20.3.3.2.3.4.5
Detection systems 13.7.4.4
Emergency command center 11.9.6
Emergency lighting 14.13.2
Emergency plans 10.9.2.2
Equipment rooms 10.19.5.2
Exits
Day-care occupancies ... 20.3.3.2.3.2, 20.3.3.2.3.3, A.20.3.3.2.3.2
Educational occupancies 20.2.2.2, 20.2.2.3, 20.2.3.2
Health care occupancies 20.4.2.3, 20.6.2.3
Extinguishers, portable fire 13.6.6.8
Fire department access 18.2.2.3, 18.2.4.1.3, A.18.2.4.1.3
Fire protection systems 13.1.1, 34.6.6.2, A.34.6.6.2
Fire pumps ..... 13.4.4, 13.4.6 to 13.4.9, A.13.4.4, A.13.4.6.2, A.13.4.6.4
Fire-resistive construction 12.3.2, A.12.3.2
Flammable and combustible liquids storage, handling, and use ..... 66.2.4.7, 66.2.5, 66.4.8.2.5, 66.5.9.6, A.66.2.5.4.1 to A.66.2.5.7.4
Folding and telescopic seating 25.4.3
Forest products, outside storage of ..... 31.3.3.2.1(5), 31.3.4.2(5), 31.3.5.2(5), 31.3.7.3.4, 31.3.8.2(5)
Grandstands 25.3.6
Hazardous material storage and use 60.1.2.11.1.3, 60.1.2.22
Membrane structures 25.5.4, 25.6.6
Model fees and charges program F.1, F.5, F.6
Motor fuel dispensing devices 42.2.5.3.6, 42.2.5.3.9.1
Performance-based design features 5.1.10, A.5.1.10
Private fire service mains 13.5.4
Refrigeration, mechanical 53.5, 53.11.5, 53.15
Roofing kettles 16.7.3
Rubbish chutes, laundry chutes, and incinerators 11.6.2
Smoke control 11.8, A.11.8
Smoke dampers 12.9.5.4
Sprinkler systems 13.3.3
Standpipe systems 13.2.3
Stationary generators and standby power systems 11.7.4
Storage occupancies 34.6.6, A.34.6.6, J.6
Tank vehicles, refueling from 42.2.7.6.1
Wildland fire-prone areas 17.3.9
Wiring, temporary 11.1.6.5
Institutional occupancies .....*see also* specific occupancies
Flammable and combustible liquids storage 66.4.5.5
LP-Gas use in 69.3.10.6
Interior finish 12.5
Airport terminal buildings 21.2.3.2, A.21.2.3.2
Assembly occupancies 20.1.3.8, 20.1.4.5.4.4

Fuel dispensing areas, inside buildings 30.1.6.2
Motor vehicle fuel dispensing facilities 42.2.6.1.5.2
Internal combustion power sources 10.15.10, 11.5.1.3, A.11.5.1.3
Irritant gas ..... 63.1.3.1(2)(e); *see also* Compressed gas
Definition 3.3.124.7
Isolated storage (definition) 3.3.225.5

-J-

Joints, smoke partitions and barriers 12.8.5, 12.9.7
Jurisdiction (definition) 3.3.145

-K-

Kerosene burners 11.5.2
Kettles
Ground (definition) 3.3.128
Patch (definition) 3.3.177
Tar ..... Table 1.12.20(a), 16.7, 69.3.12.3.5, A.16.7.1.6.2
Key boxes ..... *see* Access boxes
Keys 20.7.2.5

-L-

Labeled (definition) 3.2.5
Laboratories using chemicals ..... Table 1.12.20(a), 11.2.4, Chap. 26
Laboratory fume hoods 60.5.10.1.3, 60.5.10.2.3
Ladders ..... 4.5.6.2.2, 5.3.4(6), 28.1.8.1.2, 31.3.6.3.3.1
lasting agents ..... 60.1.5.1(1)(c); *see also* Hazardous materials
Laundry chutes ..... *see* Chutes, rubbish or laundry
Liability, authority having jurisdiction 1.9
Life safety ..... 4.1.3, A.4.1.3; *see also* Means of egress
Appropriateness of safeguards 4.4.2
Authority having jurisdiction, role of ..... *see* Authority having jurisdiction
Building use, safety during 4.1.3.2, 5.4.5, A.4.1.3.2.1, A.5.4.5.1
Evaluation, special outdoor events, carnivals, and fairs 10.15.3
Fireworks retail sales facilities 65.11.1.1.3, 65.11.1.1.4.2
Multiple safeguards 4.4.1
Safety from fire ..... 4.1.3.1, A.4.1.3.1.1 to A.4.1.3.1.2.5
Life Safety Code® 10.1.2, A.10.1.2
Lighting
Aircraft fueling A.42.4.5.7
Christmas tree lights 10.14.5, 10.14.6
Compressed gases and cryogenic fluids 63.2.11
Cryogenic fluid containers and systems 63.4.11
Emergency ..... *see* Emergency lighting
Fire pump areas 13.4.2.3, 13.4.2.4
Hazardous materials areas 60.1.2.15
Marinas and boatyards 28.1.7.3, A.28.1.7.3
Means of egress illumination ..... *see* Means of egress
Motor vehicle fuel dispensing facilities 42.4.2.2, A.42.4.2.2.4
Spray application areas
Fixtures 43.1.4.5
Portable lights 43.1.4.8
Sprinkler temperature ratings in area of ..... Table 13.3.1.8(c)
Storage occupancies 34.6.8
Temporary ..... 11.1.6.3 to 11.1.6.5
Light (low) hazard occupancies
Definition 3.3.39.2
Extinguishers, portable fire 13.6.6.1.3
Lightning precautions, aircraft fuel servicing 42.4.5.9, A.42.4.5.9
Limited care facilities (definition) ... 3.3.165.15, A.3.3.165.15; *see also* Health care occupancies
Limited combustible (definition) 3.3.147, A.3.3.147
Limits
Ceiling (definition) 3.3.146.1
Permissible exposure limit (PEL) (definition) 3.3.146.2, A.3.3.146.2
Short-term exposure limit (STEL) (definition) 3.3.146, A.3.3.146.3
Line-type detectors 13.7.4.3.4, 13.7.4.5
Definition 3.3.78.4, A.3.3.78.4
Liquefied gas
Definition 3.3.122.8
Flammable (definition) 3.3.124.4
Liquefied natural gas (LNG) 69.8
Definition 3.3.122.9, A.3.3.122.9
Vehicular fuel 30.2.9.6, 42.2.8, 42.5.3, 42.8.6.2, A.30.2.9.6, A.42.2.8.3.3, A.42.5.3
Liquid-fired vehicles ..... *see* Motor vehicles
Liquids ..... *see also* Combustible liquids; Flammable liquids; Incidental liquid use or storage; Inside liquid storage areas; Warehouses, Liquid
Highly volatile (definition) 3.3.149.3
Stable (definition) 3.3.149.4
Liquid storage cabinets ..... 34.4.4, 66.4.3, 66.4.5.4, 66.4.5.5.3 to 66.4.5.5.5, A.66.4.3.4
Listed (definition) 3.2.6, A.3.2.6
Locks and latches ..... 14.5.2, A.14.5.2.7 to A.14.5.2.11
Construction sites 16.3.4.3
Day-care occupancies 20.3.2.2, 20.3.2.3, A.20.3.2.2
Detention and correctional occupancies 20.7.2.1.1, 20.7.2.5
Fire apparatus access roads or fire lanes 18.2.4.2.5
Lodging or rooming houses 20.10
Christmas tree provisions ..... Table 10.14.1
Definition 3.3.165.16, 6.1.8.1.2
Detection, alarm, and communication systems 13.7.2.13
Extinguishers, portable fire ..... Table 13.6.1.2
Hazardous materials storage and use ..... Table 60.1.3.2(h), Table 60.3.2.3
Multiple occupancies ..... Table 6.1.14.4.1
Sprinkler systems 13.3.2.17, A.13.3.2.17.3.3
Logs
Definition 3.3.149
Outside storage of ..... 31.3.1.1(5), 31.3.2.1.6.2, 31.3.8, A.31.3.8.1.1 to A.31.3.8.3.6
Loose house 45.5.6
Definition 3.3.150
Low hazard contents
Definition 3.3.130.2, A.3.3.130.2
Storage occupancies ..... Table 6.1.14.4.1
LP-Gas ..... Chap. 69
Containers ..... *see* LP-Gas containers
Definition 3.3.122.10
Equipment and appliances ..... 10.11.7, 20.1.4.2.9(1), 20.1.4.3(6), 69.3.9, 69.3.10.2, 69.3.10.7, 69.3.10.8.4, 69.3.11, 69.3.12.6, 69.3.12.7, 69.3.12.8, A.69.3.10.2.7, A.69.3.12.7.6
Permits ..... Table 1.12.20(a), Table 1.12.20(d), 69.1.2
Piping, fittings, and valves ..... 6.9.3.10.1.2.4, 69.2.3, 69.3.9, 69.3.10.2.4 to 69.3.10.2.6, 69.3.12.5
Systems ..... *see* LP-Gas systems
Tar kettles, use with 16.7.2, 16.7.4.2.6, 69.3.12.3.5
Transfer operations, location of 69.3.5, 69.4, A.69.3.5.1, A.69.4.1
Utility plants, at 69.7
Vehicular fuel 42.2.8, 42.5.2, 42.8.6.2, 69.3.13, A.42.2.5.2.4.2.2, A.42.2.8.3.3, A.42.4.2.2.1
Vehicular transportation of 69.6
LP-Gas containers ..... 69.2, A.69.2.1.1.1 to 69.2.1.4.3
Appurtenances 69.2.1.2, 69.2.2, 69.3.12.4
ASME ..... *see* ASME containers or tanks
On balconies 69.3.10, A.69.3.10.2.7, A.69.3.10.8.3
Baled cotton storage areas L.6.2.1.2
Boat storage and ..... 28.1.8.1.5(2)
In buildings 69.3.10, 69.5.2.1.3, 69.5.2.1.4, 69.5.3, A.69.3.10.2.7, A.69.3.10.8.3
Definition 3.3.65.6
Filling and evacuating 69.4.2.2
Fire protection for 69.6.1.2
Installation 69.3.2.1, 69.3.6, A.69.3.6.1.4
Location 69.3.2.2
Marking 69.2.1.1.1, 69.2.1.4, A.69.2.1.4.2, A.69.21.4.3
Outside storage 69.5.4, A.69.5.4.1, A.69.5.4.2.2

Portable 69.2.1.2
Storage, awaiting use or resale ..... 69.5, A.69.5.4.1 to A.69.5.5
Refrigerated 69.3.4.6, A.69.3.4.6
On roofs 69.3.10, A.69.3.10.2.7, A.69.3.10.8.3
Special storage buildings 69.5.3.4
Tents, membrane structures, grandstands, and folding/telescopic seating 25.1.4.1, 25.1.10.1.4
Underground ..... Table 69.3.3.1, 69.3.3.4
Vehicle (other than engine fuel system) 69.3.12.3
Vehicular transportation of 69.6.1
LP-Gas systems
In buildings, on roofs, or on balconies 69.3.10, A.69.3.10.2.7, A.69.3.10.8.3
Fire protection 69.5.5, 69.6.1.2, A.69.5.5
Installation of ..... 69.3, A.69.3.1 to A.69.3.12.7.6
Snowfall, systems in areas of heavy 69.3.9
Tampering, protection against 69.3.13.3.7
On vehicles (other than engine fuel systems) 69.3.12, A.69.3.12.1, A.69.3.12.7.6
Lumber
Definition 3.3.151
Storage, manufacturing, and processing of ..... Chap. 31
Lumber yards ..... Table 1.12.20(a), 31.3.1 to 31.3.4, A. 31.3.2.1 to A.31.3.4.3.1

-M-

Maintenance .....*see* Inspection, testing, and maintenance
Make-up air 43.1.5.3, A.43.1.5.3
Mall buildings
Alarm systems 13.7.2.17.2, 13.7.2.18.2
Means of egress, occupant load ..... Table 14.8.1.2
Occupant load factors A.14.8.1.2
Permit requirements ..... Table 1.12.20(a)
Manual fire alarm boxes ..... 13.7.1.4.8.1 to 13.7.1.4.8.5, 13.7.3.3, A.13.7.1.4.8.3, A.13.7.3.3.8, A.17.3.3.5
Airports 21.2.6.3.1
Construction sites 16.3.3.1
Definition 3.3.152
Health care occupancies 20.6.2.2.1.2, 20.6.2.2.3.1, 20.6.2.2.3.2, A.20.4.2.2.1
Heliports, rooftop 21.3.6.9
Manual fire suppression equipment ..... 20.7.2.1.4, 33.4.1, 43.1.7.7.2(3), 43.1.7.8.2(2), 50.4.7, 66.4.9, 70.2.4.8.4, A.70.2.4.8.4.1 to A.70.2.4.8.4.3; *see also* Extinguishers, portable fire
Baled cotton storage L.4.4
Manual pull station .....*see* Manual fire alarm boxes
Manufactured homes sites 27.1
Manufactured housing ... 20.11.3, 27.1.1; *see also* One- and two-family dwellings
Marinas ..... 28.1, A.28.1.6.2.2 to A.28.1.8.3.3
Marine motor fuel dispensing facilities ..... Table 1.12.20(a), 28.1.9.4(6), 28.1.9.5, 42.2.3.2.1(4), 42.2.5.6.5, 42.3, A.42.3.2.2 to A.42.3.8.2; *see also* Motor fuel dispensing facilities
Definition 3.3.165.24.2
Marine terminals ..... 28.2, A.28.2.2 to A.28.2.4
Definition 3.3.155
Marine vessels 1.3.5
Construction, repair, and lay-up of 28.3, A.28.3.1
Definition 3.3.155
Marking .....*see also* Signs
Aerosol products 61.3, 61.4.6.1
Central station fire alarm systems 13.7.3.4.2.2, 13.7.3.4.2.3
Compressed gas containers, cylinders, and tanks 63.3.1.2.1, 63.3.1.3
Compressed gas ventilation system 63.2.16.6
Cryogenic containers and systems 63.2.16.6, 63.4.4, A.63.4.4.1.1.2
Extinguishers, portable fire 13.6.6.8.1.3, 13.6.6.8.1.4, 13.6.6.8.2.2.3
Extinguishers, portable fire, contents of 13.6.4, A.13.6.4
Fire alarm systems 13.7.3.4
Fire apparatus access road or fire lane 18.2.3.5
Fire protection ..... 5.3.3(7), 10.12, A.10.12.3
Flammable and combustible liquids storage cabinets 66.4.3.5
Flammable and combustible liquids storage tanks 66.2.5.2
Hazardous material storage lockers 66.4.6.4.4.3
LP-Gas containers 69.2.1.1.1, 69.2.1.4, A.69.2.1.4.2, A.69.21.4.3
LP-Gas fuel dispensing stations 69.3.13.3.12
LP-Gas fueled vehicles 42.5.2.4, A.42.5.2.4.2.2
Means of egress ..... 14.11.3, 14.14, A.14.14.1.2 to A.14.14.6.5.3
Motor fuel dispensing facility fill pipes 42.2.4.2.5
Organic peroxide storage 70.3.4.1, A.70.3.4.1.1
Oxidizer storage 70.2.4.2, A.70.2.4.2.1
Sprinkler systems, impairment of 13.3.4.3
Materials
Compatible (definition) 3.3.156.1
Hazardous .....*see* Hazardous materials
Health hazard .....*see* Health hazard materials
Highly toxic .....*see* Highly toxic materials
Hogged .....*see* Hogged material
Incompatible (definition) 3.3.156.8
Noncombustible (definition) 3.3.156.9
Physical hazard .....*see* Physical hazard materials
Toxic .....*see* Toxic materials
Unstable (reactive) .....*see* Unstable (reactive) materials
Water-reactive .....*see* Water-reactive materials
Material safety data sheet (MSDS) 43.7.9, 60.1.2.5.3
Definition 3.3.157
Maximum allowable quantities ..... Table 1.12.20(d), 60.1.3.1, 60.1.3.3.1, 60.1.3.3.2, 60.1.3.3.3, Table 60.1.3.1, Tables 60.1.3.2(a) to (h), Tables 60.1.3.3.1(a) and (b); *see also* Hazardous materials storage facility
Definition 3.3.158, A.3.3.158
Storage and use in amounts exceeding 60.1.3.2, 60.1.3.3, 60.3, A.60.3.2.6
Maze, crop 10.15.11
Means of egress ..... 4.4.3, Chap. 14; *see also* Doors; Exits
Accessible 14.9.1.3, 14.10.4, A.14.10.4.1
Aerosol products, buildings for 61.4.2.2, 61.7.1
Airport terminal buildings 21.2.5, A.21.2.5
Arrangement of ..... 14.10, A.14.10.1.1.1 to A.14.10.4.1
Awareness of egress system 4.4.3.2
Buildings under construction 10.3.3, 16.1.3, 16.3.4.5, 16.7.1.7, A.10.3.3
Capacity of 14.8, A.14.8.1.2, A.14.8.3.3.1.1
Combustible materials storage 10.19.4
Definition 3.3.159, A.3.3.159
Exterior ways of exit access 14.10.3
Fireworks facilities 65.11.3.14, 65.11.3.19.2, 65.11.4.8, 65.11.5.2, 65.11.6.2.3
Hazardous material storage and use 60.3.24
Heliports, roof-top 21.3.4.4, A.21.3.4.4
Illumination .....*see* Illumination of means of egress
Impediments to egress 14.4.3, 14.10.2, A.14.10.2.2
Marking of ..... 5.3.4(12), 14.14, 20.1.3.7, A.14.14.1.2 to A.14.14.6.5.3, A.20.1.3.7.3
Motor vehicle fuel dispensing facilities 30.1.3, 42.2.6.1.2
Number of 14.9
Performance-based design option 5.3.4
Reliability 14.4, A.14.4.1
Repair garages 30.2.4
Storage occupancies 34.8.2.3, A.34.8.2.3
Tents, membrane structures, grandstands, and folding/telescopic seating 25.1.3
Unobstructed egress 4.4.3.1
Width of ..... 14.8.2, Table 14.8.3.1, 14.8.3.3, A.14.8.3.3.1.1
Means of escape 5.3.4, 14.15
Buildings under construction 4.5.6.2, 16.1.3
Definition 3.3.160
Measurement, units of 1.5
Mechanical code (definition) 3.3.46.3
Medical gas systems 63.3.4
Membrane penetrations ..... 12.7.5.6, 12.9.6.1, A.12.7.5.6.3(1)(c)

Membrane structures
Permanent ..... Table 1.12.20(a), 25.1, 25.5, A.25.1.6, A.25.1.8, A.25.5.3.3.1
Temporary ..... Table 1.12.20(a), 25.1, 25.6, A.25.1.6, A.25.1.8
Fireworks sales ..... *see* Fireworks
Mercantile occupancies 13.3.2.21, 13.3.2.22, 20.12
Aerosol products 61.6
Christmas tree provisions ..... Table 10.14.1
Class A (definition) 3.3.165.17.1
Class B (definition) 3.3.165.17.2
Class C (definition) 3.3.165.17.3
Definition 3.3.165.17, 6.1.10.1, A.3.3.165.17, A.6.10.1
Detection, alarm, and communication systems 13.7.2.17, 13.7.2.18
Extinguishers, portable fire ..... Table 13.6.1.2, 20.12.2.2
Fireworks, consumer ..... 65.11, A.65.11.1 to A.65.11.5.1.2(3)
Flammable and combustible liquids 66.4.5.6
Hazardous materials storage and use ..... 60.1.3.3, Table 60.3.2.3
Means of egress, occupant load ..... Table 14.8.1.2
Multiple occupancies ..... 6.1.14.1.2, Table 6.1.14.4.1, A.6.1.14.1.2
Oxidizers, storage and display of 70.2.9, A.70.2.9.2.1
Metals, combustible, fires ..... *see* Class D fires, extinguishers for
Mezzanines 10.12.3.7.1
Definition 3.3.161
Means of egress 14.8.1.6, 14.9.1.1
Mini-storage buildings ..... *see* Storage occupancies
Mixed occupancies ..... 6.1.14.1.1(1), 6.1.14.3
Definition 6.1.14.2.2
Mixing rooms 43.1.6.3, 43.1.7.1, A.43.1.7.1
Model rocketry ..... *see* Rockets, model
Modifications, code 1.4, 4.5.1.2, 4.5.2
Motion picture soundstages ..... 20.16.1.2, Chap. 32
Motor fuel dispensing facilities ..... 30.1, 30.3, Chap. 42, A.30.1.5.1 to A.30.1.6.9
Aircraft ..... *see* Aircraft fuel servicing
Alternate fuels ..... 42.2.8, 42.5, 42.8.6.2, A.42.2.8.3.3, A.42.5.1.1 to A.42.5.3
Definition 3.3.165.24
Fleet vehicle motor fuel dispensing facility 42.2.1.1, 42.2.1.2, 42.2.3.3.2.6, 42.2.6.1.5.6
Definition 3.3.165.24.1
Forest products storage, manufacturing, and processing 31.3.2.1.6.1, A.31.3.2.1.6.1
Located inside buildings 42.2.1.1, 42.2.3.2.1, 42.2.3.10, 42.2.6.1.5, 42.2.7.4, A.42.2.6.1.5.7
Definition 3.3.165.24.3, A.3.3.165.24.3
Fast-fill fueling 42.5.1.4.3.12
Marine ..... *see* Marine motor fuel dispensing facilities
Permits ..... Table 1.12.20(a), 30.1.1.3, 42.2.2.1, 42.3.1.4, 42.4.1.2, 42.5.2.2.4, 42.5.3.1
Piping 42.2.4
Storage requirements ..... 42.2.3, A.42.2.3.3.2 to A.42.2.3.9
Motor vehicle fluids 22.9
Definition 3.3.162
Motor vehicles ..... 1.3.5; *see also* Salvage vehicles
Aerosol products storage, use, and handling ..... 61.4.6.6.2(13), 61.7.3.1(13)
Air bag systems 22.9.4
Alternative fuels ..... *see* Compressed gas systems; LP-Gas systems
Baled cotton storage areas L.6.2.4
Combustible fiber storage room or building, use in/near 45.4
Cryogenic fluids, loading and unloading of 63.4.13.10.3.3
Exposition facilities 20.1.4.5.4.12
Forest products, storage of 31.3.2.1.6, A.31.3.2.1.6.1
Fueled equipment, storage of 10.19.7
Hazardous materials areas, protection of 60.1.2.13
Spray application, undercoating and body lining 43.5.1
Waste or refuse transport 19.1.8
Wrecking yards ..... Table 1.12.20(a), Chap. 22
Moving walks 14.11.4
Multilevel play structures 20.1.3.1, A.20.1.3.1
Multiple occupancies 1.3.4, 6.1.14, A.6.1.4.1.2
Definition 6.1.14.2.1
Multiplug adapters 11.1.5.1

-N-

Natural barricades ..... *see* Barricades
Nesting (definition) 3.3.163
No exit, marking of 14.14.6.5.3, A.14.14.6.5.3
Noncombustible material (definition) 3.3.157.8
Nondedicated smoke control systems (definition) 3.3.233.10
Nonflammable gas ..... 63.1.3.1(1)(b), Table 63.2.3.1; *see also* Compressed gas
Definition 3.3.124.11
Normal temperature and pressure (NTP) (definition) 3.3.164
Notice of violations, penalties 1.16
Notification
Emergency forces 13.7.1.4.10, 42.2.7.5.5, J.7.1
Special outdoor events, carnivals, and fairs 10.15.9
Occupant notification 4.4.4, 13.7.1.4.9, A.4.4.4
Nursing homes ..... *see also* Health care occupancies
Definition 3.3.165.18
Smoke detection systems 13.7.2.5.3, A.13.7.2.5.3

-O-

Objectives 4.1.2, A.4.1
Compliance options 4.3
Performance-based design 5.1.2
Property protection 4.1.4.2, A.4.1.2.2, A.4.1.4.2.1
Public welfare 4.1.5.2, A.4.1.5.2
Safety-during-building-use 4.1.3.2.2
Safety-from-fire 4.1.3.1.2, A.4.1.3.1.2.2, A.4.1.3.1.2.5
Safety-from-hazardous materials 4.1.3.3.2, A.4.1.3.3.2.2
Occupancies ...*see also* specific occupancies, e.g. Assembly occupancies
Changes of 4.5.7, 10.3.4, A.4.5.7, A.10.3.4
Classification of ..... Chap. 6
Definition 3.3.165
Multiple 1.3.4
Occupancy, conditions for 4.5.4, 10.3, A.10.3.3, A.10.3.4
Occupancy fire safety ..... Chap. 20
Occupant characteristics (definition) 3.4.13
Occupant load 14.8.1, 14.8.3.2, 14.9.1.2, 14.9.1.4, A.14.8.1.2
Assembly occupancies, posting in 20.1.4.9.3
Definition 3.3.166
Occupant notification 4.4.4, 13.7.1.4.9, A.4.4.4, A.13.7.1.4.9.2.1
Occupant protection, performance-based design option 5.2.2.6, 5.2.2.8
Occupant responsibilities 10.2
Extinguishers, portable fire 13.6.6.8.1.1
Fire reporting requirements 10.7.1.3, A.10.7.1.3
Sprinkler systems 13.3.3.4
Occupiable story (definition) 3.3.229.1, A.3.3.229.1
Oil burners 11.5.1.1, 11.5.1.7, 11.5.1.8
Oil-fueled heating appliances ..... *see* Heating equipment and appliances
Oil stoves 11.5.2
One- and two-family dwelling
Multiple occupancies ..... Table 6.1.14.4.1
One- and two-family dwellings 20.11
Access to 18.2.3.5.1.1
Christmas tree provisions ..... Table 10.14.1
Definition 3.3.165.19
Detection, alarm, and communication systems 13.7.2.14
Extinguishers, portable fire ..... Table 13.6.1.2
Fire flow requirements H.5.1
Flammable and combustible liquids storage 66.4.5.3
Hazardous materials storage and use ..... Table 60.3.2.3
Sprinkler systems ..... Table 13.8
One- and two-family dwelling units (definition) ..... 3.3.165.19.1, 6.1.8.1.1, A.6.1.8.1.1; *see also* Dwelling units

Open fires ..... 5.3.3(4), 10.11
Automobile wrecking yards 22.8
Permit requirements ..... Table 1.12.20(a)
Tires, outside storage of 33.1.6.2
Wildland fire-prone areas 17.3.4.7, A.17.3.4.7.1
Open-flame devices
Assembly occupancies ..... 20.1.4.3, 20.1.4.5.4.8, A.20.1.4.3(3)(a)
Baled cotton storage areas L.6.3.2
Marinas and boatyards, use at 28.1.8.1.3
Wildland fire-prone areas 17.3.4.6, A.17.3.4.6.1
Open flames 10.1.5, 10.14.7
Aerosol products storage, use, and handling ..... 61.4.6.6.2(1), 61.7.3.1(1)
Aircraft fuel servicing 42.4.5.8
Buildings under construction 16.2.3.1.4
Compressed gases and cryogenic fluids 63.3.6.3.2
Fibers, combustible, storage and handling 19.1.7
Flammable and combustible liquids storage, handling, and use ..... 66.2.4.3.1(1), 66.4.10(1), 66.5.6(1)
Forest products, storage of 31.3.2.1.12
Hazardous materials, in areas with 60.1.2.9.2
Motor fuel dispensing facilities ..... 42.3.10.4(2)
Permit requirements ..... Table 1.12.20(a)
Refrigerant machinery rooms 53.10.3.1, 53.10.3.3
Spray application operations 43.1.4.1.5, 43.1.8.11, 43.5.3.6, A.43.1.4.1.5
Tents and temporary membrane structures 25.1.5.5
Tires, outside storage of 33.7.3
Opening protectives .....*see also* Fire door assemblies; Fire windows
Baled cotton storage buildings L.2.3.3
Combustible fiber storage room or building 45.5.3.2, 45.5.4.3, 45.5.4.4
Fire barriers 12.7.4, A.12.7.4.2
Fuel dispensing areas, inside buildings 30.1.6.3
Motor vehicle fuel dispensing facilities 42.2.6.1.5.3
Smoke partitions 12.8.3, A.12.8.3.4
Temporary separation walls 16.4.2.3, 16.4.2.4, A.16.4.2.4
Openings
Aerosol products, buildings for 61.4.2.1
Airport ramps, openings facing 21.2.3.5, A.21.2.3.5
Compressed gases and cryogenic fluids 63.3.9.2.2.2
Conveyor, spray areas 43.1.3.2
Exit enclosures ..... 14.3.1, A.14.3.1(1) to A.14.3.1(5)
Flammable and combustible liquids storage, handling, and use 66.2.3.2.4, 66.4.4.2.2, A.66.2.3.2.4.4
Supply and exhaust, hazardous materials storage facility 60.3.2.5.9
Vertical ..... 4.4.5; *see also* Penetrations
For conveyors, elevators, and dumbwaiters 11.3.5
Marking of shaftways 10.12.2
Protectives, minimum ratings for ..... Table 12.7.4.2
Rubbish chutes and laundry chutes .....*see* Chutes, rubbish or laundry
Smoke barriers 12.9.6
Open parking structures 13.3.2.13.6, 13.3.2.15.7, 13.7.2.22.2.2, 29.1.1
Definition 3.3.165.20.3
Open plan buildings 20.2.2, 20.3.2.4, 20.3.3.2.3.3
Open system use (definition) 3.3.244.2
Operating or process unit (vessel) 66.5.3.2, A.66.5.3.2.3
Definition 3.3.168
Operating pressure (definition) 3.3.169
Operations and maintenance (O & M) manual 5.1.8, A.5.1.8
Operations (definition) 3.3.170
Operators, responsibilities of .....*see* Owners, responsibilities of
Ordinance adopting code, sample ..... Annex C
Ordinary hazard contents
Definition 3.3.128.3, A.3.3.128.3
Extinguishers, portable fire 13.6.6.1.3
Storage occupancies ..... Table 6.1.14.4.1
Ordinary (moderate) hazard occupancies (definition) 3.3.39.3
Organic coatings .....*see* Coating processes
Organic peroxide ..... Table 60.1.3.1, 70.1, A.70.1.1; *see also* Hazardous materials
Definition 3.3.171
Detached storage 60.3.3.2
Formulations B.3
Permits ..... Table 1.12.20(a), Table 1.12.20(d), 70.1.2
Peroxide forming chemicals (definition) 3.3.180
Secondary containment 60.3.2.9
Specific occupancies, storage and use in ..... Tables 60.1.3.1(a) to (h)
Spray application of ..... 43.7, 43.8.7, A.43.7.1 to A.43.7.6
Storage area (definition) 3.3.13.7
Organic peroxide formulations ..... 70.3, A.70.3.1.1 to A.70.3.7.2.1
Classification 70.3.2, A.70.3.2
Definition 3.3.171.1, A.3.3.171.1
Storage arrangements 70.3.4.9, 70.3.5.4, 70.3.6.2, A.70.3.4.9.6, A.70.3.5.4.3, A.70.3.6.2
Storage limitations 70.3.4.8, A.70.3.4.8.1.3, A.70.3.4.8.2
Organic peroxide storage area (definition) 3.3.13.9
OSHA (definition) 3.3.172
Outdoor areas 60.1.2.21, 60.2.6, 63.2.5.2, 68.3.1, 68.3.4
Definition 3.3.13.8
Outdoor storage ..... 10.16, Chap. 34, Annex J; *see also* Yards
Compressed gases 63.2.5.2
Compressed natural gas (CNG) containers 42.5.1.4.2, 42.5.1.4.3.12
Corrosive solids and liquids 64.2
Cryogenic fluid containers ..... 63.4.12.2, A.63.4.12.2.5.4.1 to A.63.4.12.2.6.2.1
Flammable and combustible liquids 66.4.7
Flammable solids 67.2
Forest products ..... Chap. 31
Hazardous materials .....*see* Hazardous materials
Highly toxic and toxic solids and liquids 68.3
LP-Gas portable containers 69.5.4, A.69.5.4.1, A.69.5.4.2.2
Pyrophoric solids and liquids 71.2
Tires .....*see* Tires
Unstable (reactive) solids and liquids 72.2
Water-reactive solids and liquids 73.2
Ovens and furnaces .....*see* Industrial ovens and furnaces
Owners, responsibilities of 10.2, 13.1.2, 13.2.3.2
Buildings under construction .... 16.3.2, A.16.3.2.1 to A.16.3.2.5.5
Emergency plans 10.9.3
Extinguishers, portable fire 13.6.6.8.1.1
Fire reporting requirements 10.7.1.3, A.10.7.1.3
Hot work 41.4, A.41.4.1
Marine vessels, fueling of 42.3.10.7
Private fire service mains 13.5.4.1
Sprinkler systems 13.3.3.4
Oxidizers ..... 70.1, 70.2, A.70.1.1, A.70.2.1.1 to A.70.2.9.2.1, Table 60.1.3.3.1(a), Table 60.2.6.5, Table 60.3.2.6; *see also* Hazardous materials
Bulk storage ..... Table 70.2.6.3.7.2, 70.2.7.3.6, Table 70.2.7.3.7.2, 70.2.8.3.4
Class 1 ..... 3.3.174.1, 70.2.2(1), 70.2.5, A.70.2.5.2, B.2.2
Definition 3.3.173.1
Class 2 ..... 70.2.2(2), 70.2.6, A.70.2.6.2, A.70.2.6.3.4, B.2.3
Definition 3.3.173.2
Class 3 ..... 70.2.2(3), 70.2.7, A.70.2.7.2, B.2.4
Definition 3.3.173.3
Class 4 ..... 70.2.2(4), 70.2.8, A.70.2.8.2, B.2.5
Definition 3.3.173.4
Classification of 70.2.2, A.70.2.2, B.2
Definition 3.3.173, 3.3.173.1, A.3.3.173
Detached storage .....*see* Detached storage
Fire protection 70.2.4.8, A.70.2.4.8.1
Permits ..... Table 1.12.20(a), Table 1.12.20(c), Table 1.12.20(d), 70.1.2
Retail storage and display 70.2.9, A.70.2.9.2.1
Secondary containment 60.3.2.9
Specific occupancies, storage and use in ..... Tables 60.1.3.2(a) to (h)

Oxidizing gas ..... 63.1.3.1(1)(c), 63.2.3.1.3, Table 63.2.3.1, Table 63.3.1.6.2, 63.3.7; *see also* Compressed gas; Hazardous materials
Definition 3.3.122.13
Permit amounts for ..... Tables 1.12.20(b) to (d)
Specific occupancies, storage and use in ..... Tables 60.1.3.2(a) to (h)
Oxygen-fuel gas systems 41.5, A.41.5.2.3
Ozone-gas generating equipment ..... Annex G

-P-

Packaging
Definition 3.3.175
Fireworks ..... *see* Fireworks
Palletized storage ..... 34.1.2, 34.2.4, 34.2.5, 34.9.1(3), 34.10, 66.4.4.3.4, 66.4.5.2.5, Table 70.2.6.3.7.2, A.34.4.1, Fig. A.34.8.1(b), Fig. A.34.8.1(e), A.34.10.1, A.34.10.3
Definition 3.3.225.10
Pallets, conventional ..... *see* Conventional pallets
Panic hardware 14.5.3.3
Paper
Column (definition) 3.3.48
Core (definition) 3.3.71
Definition 3.3.176
Storage, rolled paper 34.1.1, 34.2.7, 34.9, A.34.2.7, A.34.9.2
Rack storage test data and procedures ..... Annex K
Tissue ..... 34.2.7.4, Annex K
Parade floats ..... Table 1.12.20(a), 10.17
Parking structures ..... 13.3.2.13.6, 13.3.2.15.7, 13.7.2.22.2, Chap. 29
Basement and underground 29.1.1
Definition 3.3.165.20.1
Definition 3.3.165.20, A.3.3.165.20
LP-Gas cargo vehicles 69.6.2
LP-Gas fueled vehicles 42.5.2.7
LP-Gas systems on vehicles 69.3.12.9
Partitions ..... 14.8.3.3.1.1, A.14.8.3.3.1.1; *see also* Smoke partitions
Patch kettles (definition) 3.3.177
Penalties, for code violation 1.16, E.2.4
Penetrations ..... 12.7.5, A.12.7.5.6.3(1)(c)
Exit enclosures ..... 14.3.1, A.14.3.1(1) to A.14.3.1(5)
Smoke barriers 12.9.6
Smoke partitions 12.8.4
Performance-based design ..... 1.4, 4.3.2, 4.5.3, Chap. 5
Definitions 3.4
Design scenarios 5.4, A.5.4
Documentation requirements ..... 5.7, A.5.7.1 to A.5.7.11
Evaluation 5.1.5, 5.5, 5.7.13, A.5.1.5
Performance criteria ..... *see* Performance criteria
Pre-construction design requirements 5.1, A.5.1
Retained prescriptive elements 4.3.2.2, 5.3, 5.7.10
Safety factors 5.6, 5.7.9, A.5.6
Warrant of fitness 4.5.5.1
Performance criteria 5.2, A.5.2.2
Definition 3.4.14, A.3.4.14
Permissible exposure limit (PEL) (definition) 3.3.146.2, A.3.3.146.2
Permits ..... 1.12, A.1.12.17; *see also* Maximum allowable quantities; specific occupancies
Aerosol products 61.1.2, 61.7.3.3.1
Asbestos removal ..... Table 1.12.20(a), 16.8.2
Automobile wrecking yards ..... Table 1.12.20(a), 22.2
Compressed gas 63.1.2
Crop maze 10.15.11.1
Cryogenic fluids 63.1.2
Definition 3.3.179
Explosives, fireworks, and model rocketry 65.2.3, 65.3.3, 65.4.2, 65.5.2, 65.7.2, 65.8.2, 65.9.2, 65.10.2, 65.11.3.2, A.65.11.3.2
Fibers, combustible 45.1.3
Fire protection systems 13.1.1.1
Fire pumps 13.4.1.2
Forest products 31.2
Hot work operations ..... *see* Hot work operations
Laboratories using chemicals 26.3
Misrepresentation, effect of 1.12.4
Model fees and charges program ..... Annex F
Motion picture and television soundstages 32.2
Motor fuel dispensing facilities ..... *see* Motor fuel dispensing facilities
Organic peroxides 70.1.2
Oxidizers 70.1.2
Refrigeration, mechanical 53.4
Revocation or suspension of 1.12.19
Sample permit ..... Fig. A.1.12.17
Special outdoor events, carnivals, and fairs ..... Table 1.12.20(a), 10.15.1, 10.15.11.1
Storage, general 34.1.2
Tents, membranes, grandstands, and folding/telescopic seating 25.1.2
Tires, outside storage of 33.1.2
Waste and refuse 19.1.1
Wildland fire–prone areas 17.3.2, A.17.3.2
Peroxide-forming chemicals (definition) 3.3.180
Personal care (definition) 3.3.181, A.3.3.181
Pest control devices 65.11.2.6
Pesticides (definition) 3.3.182
Petroleum, crude (definition) 3.3.74
Physical hazard (definition) ..... 3.3.183; *see also* Organic peroxide; Oxidizers
Physical hazard materials ..... Tables 60.1.3.2(a) to (h), Table 60.1.3.3.1(a) and (b), 63.1.3.1(1), A.60.3.2; *see also* Hazardous materials
Definition 3.3.156.10
Piers ..... 28.1.6.2.3, 28.1.7.2, 28.1.7.3, 28.2, 42.3.1.3, 42.3.2.2, 42.3.7.2, 42.3.7.3, A.28.1.7.3, A.28.2.2 to A.28.2.4, A.43.2.2
Definition 3.3.184
Pipes and piping
Compressed gases and cryogenic fluids 63.2.15, 63.3.1.3.4
Cryogenic fluids 63.4.13.1.4.3, 63.4.13.2, 63.4.13.10.3.2.3
Flammable and combustible liquids ..... 43.1.6.4, 66.3, 66.5.3.7.4 to 66.5.3.7.7, A.43.1.6.4.1 to A.43.1.6.4.5
Hazardous materials 60.1.2.5.1.1, A.60.1.2.5.1.1
Hot tapping of pipeline 41.3.5, A.41.3.5
LP-Gas equipment and appliances 69.2.3, 69.3.1, 69.3.9, 69.3.12.5, 69.3.13.3.6, A.69.3.1
Motor vehicle fuel dispensing facilities 42.2.4, 42.3.3, 42.3.7.3
Ozone-gas generating equipment G.5
Tar kettles ..... 16.7.3.2 to 16.7.3.5
Pits, repair garages 30.2.6, 30.2.8.3
Planned building groups ..... Chap. 15
Definition 3.3.185
Plan review 1.14, A.1.4.1
Plans ..... 1.7.11; *see also* Emergency plans
Construction operations
Prefire plans for 16.3.2.3, A.16.3.2.3
Waste chutes, safety plans for 16.2.2.4, A.16.2.2.4
Exposition facilities 20.1.4.4.4.11
Fire department access 18.1.1.1
Fire hydrants 18.1.1.2
Fireworks retail sales facilities 65.11.3.3, 65.11.3.13, 65.11.4.1, 65.11.4.2, 65.11.6.1, A.65.11.3.13
Forest products, outside storage of 31.3.6.5, 31.3.7.3.4
Hazardous materials storage and handling 60.1.2.4.3, 60.1.2.5, D.3
Heliports 21.3.3.1, A.21.3.3.1
Motor vehicle fuel dispensing facilities 42.2.2.2
Planned building groups 15.3
Wildland/urban interface, construction plans for 17.2
Plastics
Cellulose nitrate plastic ..... Table 1.12.20(a), Table 1.12.20(d)

Foamed ..... 20.1.2.2, 20.1.2.4, 20.1.4.4.6, 20.1.4.4.7, 20.1.4.5.4.4(6), 20.1.4.5.4.4(7), 20.1.4.5.4.6.2, A.20.1.4.4.6
Pyroxylin ..... Table 1.12.20(a)
Storage 34.1.1, 34.2.6
Play structures, multilevel 20.1.3.1, A.20.1.3.1
Plumbing code (definition) 3.3.46.4
Plural component coverings ..... 43.7, A.43.7.1 to A.43.7.6
Poles, outside storage of ..... 31.3.1.1(3), 31.3.5, A.31.3.5.1.1 to A.31.3.5.3.5
Portable cooking ..... *see* Cooking equipment
Portable tanks ..... *see* Tanks
Posts, outside storage of ..... 31.3.1.1(3), 31.3.5, A.31.3.5.1.1 to A.31.3.5.3.5
Powder coating ..... 43.1.3.1.8, 43.1.5.2.2, 43.1.7.2.1.1, 43.1.7.3 Ex. 2, 43.1.7.7, 43.6, A.43.1.7.7
Power; ..... *see also* Emergency power; Standby power
Alarm systems, power supplies for 13.7.3.8, A.13.7.3.8
Power taps, relocatable 11.1.5.2
Preaction sprinkler systems 66.4.8.2, 70.2.4.8.3, A.66.4.8.2, A.70.2.4.8.3
Premises identification 10.12.1
Prepackaged fireworks merchandise ..... *see* Fireworks
Prescriptive-based design 4.3.1, 4.3.2.2, 5.3, 5.7.10
Pressure-treating plants ..... 31.3.5, A.31.3.5.1.1 to A.31.3.5.3.5
Pressurization system, membrane structures 25.5.3.2, 25.6.5.2
Primary containment (definition) 3.3.186
Private buildings (definition) 3.3.27.9
Private fire hydrants ..... *see* Fire hydrants
Private fire service mains 13.5.1, 13.5.4
Private water supply systems 18.3.5
Processes or processing (definition) ..... 3.3.188; *see also* specific processes, e.g. Oxidizers
Process unit (vessel) ..... *see* Operating or process unit (vessel)
Professional engineers (definition) 3.3.190
Projected beam detectors .... 13.7.4.3.7, 13.7.4.3.11.2 Ex., 13.7.4.6.2
Projection rooms 20.1.4.11
Property protection 4.1.1, 4.1.4, A.4.1.1, A.4.1.4.2.1, A.4.1.4.2.2
Appropriateness of safeguards 4.4.2
Multiple safeguards 4.4.1
Performance-based design option 5.2.2.4, A.5.2.2.4
Proposed design (definition) 3.4.15, A.3.4.15
Proprietary information (definition) 3.3.191
Protected above ground tanks ..... *see* Tanks
Protection for exposures
Definition 3.3.192
Forest products, storage of ..... 31.3.2.2, 31.3.3.4, 31.3.6.4, A.31.3.2.2.1, A.31.3.3.4.2, A.31.3.6.4.1 to A.31.3.6.4.3
Public fire education 1.7.16
Public water supply, contamination of A.13.5.3
Public way (definition) ..... 3.3.193; *see also* Roadways
Public welfare 4.1.5, 5.2.2.5, A.4.1.5.1, A.4.1.5.2, A.5.2.2.5
Pumps, fire ..... *see* Fire pumps
Pumps, fuel
Aircraft fueling 42.4.5.2.4, 42.4.5.2.7
Remote/submersible 42.2.5.4
Rooftop heliports 42.4.4.3
Purpose of code 1.2, A.1.2
Pyrophoric gas ..... Table 60.1.3.1, 63.1.3.1(1)(d), Table 63.2.3.1, Table 63.2.9, 63.2.10.2.2, Table 63.3.1.6.2, 63.3.8; *see also* Compressed gas; Hazardous materials
Definition 3.3.122.14
Permit amounts for ..... Table 1.12.20(b), Table 1.12.20(d)
Pyrophorics (solids and liquids) ..... Tables 60.1.3.2(a) to (h), Chap. 71
Definition 3.3.194
Permit amounts for ..... Table 1.12.20(d)
Secondary containment ..... Table 60.3.2.9
Pyrotechnic articles ..... Table 1.12.20(a), 20.1.4.2, 65.11.2.4, A.20.1.4.2(3)(a)
Pyrotechnics before a proximate audience .... Table 1.12.20(a), 65.3
Pyroxylin plastics ..... Table 1.12.20(a)

-R-

Racks
Definition 3.3.195, A.3.3.195
Double-row racks ..... A.34.7.3.1(1), Fig. A.34.8.1(d)
Definition 3.3.195.1
Movable racks ..... A.34.7.3.1(4)
Definition 3.3.195.2, A.3.3.195.2
Multiple-row racks ..... A.34.7.3.1(3)
Definition 3.3.195.3
Portable racks ..... Fig. A.34.7.3.1(j), Figs. A.34.8.1(a) to (e)
Definition 3.3.195.4, A.3.3.195.4
Single-row racks (definition) 3.3.195.5
Rack storage ..... 34.1.1.2(1), 34.1.1.2(6), 34.1.2, 34.7, A.34.7.1 to A.34.7.3.4.2.1(1)
Baled cotton L.3.2
Boats 28.1.8.3, A.28.1.8.3.3
Flammable and combustible liquids inside liquid storage areas 66.4.4.3.3, 66.4.4.4.3, 66.4.4.4.5, 66.4.5.2.5, 66.4.8.1.2, 66.4.8.2.2, 66.4.8.6
Oxidizers ..... Table 70.2.6.3.7.2, Table 70.2.7.3.7.2
Test data and procedures ..... Annex K
Radar equipment, airports 42.4.2.1.4, 42.4.2.1.5, A.42.4.2.1.5
Ramps 14.11.4
Airport ..... *see* Airport ramps
Definition 3.3.196
As means of escape 4.5.6.2.2
Performance-based design option ..... 5.3.4(5)
Width of ..... Table 14.8.3.1
Recommended practice (definition) 3.2.7
Records and reports 1.11
Aerosol products storage, use, and handling 61.7.6.1
Alarm systems ..... A.13.7.3.2.4(1)
Cooking equipment exhaust system 50.2.3, 50.2.4, 50.4.11, A.50.4.11.2
Cryogenic fluids storage 63.4.13.1.3.2
Fees for F.7
Fire protection systems 13.3.3.5, 13.6.6.8.2.2, 13.6.6.8.3.3, 13.7.3.2, A.13.3.3.5.1, A.13.6.6.8.3.3
Construction documents for 13.1.1
Testing and maintenance 13.1.5, 13.7.3.2.6, 13.7.3.2.7, A.13.7.3.2.7
Fires and other emergencies, reporting of 10.7, A.10.7.1.3
Flammable and combustible liquids storage 66.2.5.8
Hazardous materials D.2, D.3.2.7, D.4
Owners and occupants, of 10.2.5
Performance-based design ..... 5.1.4, 5.1.6, 5.1.12.3, 5.7, A.5.1.4, A.5.7.1 to A.5.7.11
Refrigerant quantities 53.18
Spray application staff, training of 43.5.1.4
Record storage 12.4.3, 20.15.5, A.12.4.3, A.20.15.5.2
Recreational fires (definition) 3.3.197
Recreational vehicle parks 27.2
Reduced flow valves (definition) 3.3.246.2
References ..... 1.3.2, Chap. 2, A.1.3.2, Annex 0
Refineries 66.5.7.1.2
Definition 3.3.198
Refrigeration, mechanical ..... Table 1.12.20(a), 34.6.7, Chap. 53
Refueling ..... Chap. 42
Refuse, combustible ..... 10.13.1, Chap. 19; *see also* Waste, combustible
Definition 3.3.53
Relocatable power tap (definition) 3.3.199
Relocation area 5.2.2.6, 10.6.6
Relocation drills ..... *see* Fire drills
Remote pumping systems 42.2.5.4
Repair garages 30.2, 30.3, 42.2.7.4, A.30.2.8, A.30.2.9.6
Construction 30.2.3
LP-Gas cargo vehicles in 69.6.2.3.6

LP-Gas fueled vehicles 42.5.2.7
LP-Gas systems on vehicles 69.3.12.9
Major repair garage (definition) 3.3.165.21.1
Minor repair garage (definition) 3.3.165.21.2
Permit requirements ..... Table 1.12.20(a)
Reports ..... *see* Records and reports
Residential board and care occupancies ..... 20.5, A.20.5.2.4.1 to A.20.5.2.5.2.3
Battery systems, location of 52.3.3.4
Christmas tree provisions ..... Table 10.14.1
Definition 3.3.165.22, 6.1.9.1, A.3.3.165.22, A.6.1.9.1
Detection, alarm, and communication systems 13.7.2.15, 13.7.2.16, A.13.7.2.16.1.4
Doors 14.5.1.1.3
Emergency plans 10.9.1, 20.5.2.1
Extinguishers, portable fire ..... Table 13.6.1.2
Hazardous materials storage and use ..... Table 60.1.3.2(h), Table 60.3.2.3
Means of egress, occupant load ..... Table 14.8.1.2
Multiple occupancies ..... Table 6.1.14.4.1
Sprinkler systems 13.3.2.19, 13.3.2.20, A.13.3.2.20.1.1
Residential occupancies ..... *see also* Specific occupancies
Battery systems, location of 52.3.3.4
Board and care facilities ..... *see* Residential board and care occupancies
Definition 6.1.8.1
Definitions 3.3.165.23
Flammable and combustible liquids storage 66.4.5.3
Hazardous materials storage and use ..... Table 60.1.3.2(h)
LP-Gas storage in 69.5.3.2, 69.5.3.5
Multiple occupancies ..... Table 6.1.14.4.1
Sprinkler temperature ratings for specific areas of ..... Table 13.3.1.8(c)
Resins, spray application of ..... 43.8, A.43.8.1 to A.43.8.5.3
Retail buildings, bulk merchandising
Definition 3.3.166.3
Detection, alarm, and communication systems 13.7.2.17.3, 13.7.2.18.3
Sprinkler systems 13.3.2.21.3, 13.3.2.22.2
Roadways
Fire department access roads ..... *see* Fire department access roads
Wildland fire-prone areas 17.3.5.3, 17.3.7
Rockets, model ..... 65.6 to 65.8
Permit requirements ..... Table 1.12.20(a)
Wildland fire-prone areas 17.3.4.2
Roofing kettles ..... *see* Kettles
Roofing systems, torch-applied ..... Table 1.12.20(a), 16.6
Roofs ..... *see also* Canopies
Access to 10.12.3.6, 14.6.4.5, 14.11.6
Combustible fibers, storage vaults for 45.5.4.5
Heliports, rooftop ..... *see* Heliports, rooftop
LP-Gas systems on 69.3.10, A.69.3.10.2.7, A.69.3.10.8.3
Membrane structures 25.5.1.1, 25.5.1.4, 25.6.1.3
Sprinkler systems
Exterior spaces under roof, sprinkler systems for 13.3.2.4, 21.2.6.2.4, A.13.3.2.4
Sprinkler temperature ratings ..... Table 13.3.1.8(b)
Rooming houses ..... *see* Lodging or rooming houses
Rooms ..... *see also* Cutoff rooms; Gas rooms; Inside rooms
Equipment rooms, storage in 10.19.5
Rows
Definition 3.3.201
Rubber, storage of ..... 34.2.6; *see also* Tire storage
Rubbish, combustible ..... 16.2.2, 17.3.4.7.2, 34.6.4, A.16.2.2.1, A.16.2.2.4; *see also* Waste, combustible
Rubbish chutes ..... *see* Chutes, rubbish or laundry
Rubbish-handling operations, commercial ..... Table 1.12.20(a)

-S-

Safe location (definition) 3.4.16
Safety ..... *see* Life safety
Safety cans ..... 43.1.6.5.1, 66.4.5.4, 66.4.5.5.2 Ex., 66.4.5.5.3
Definition 3.3.202
Safety factor (definition) 3.4.17
Safety margin (definition) 3.4.18
Sales display area 65.11.3.15, A.65.11.3.15
Definition 3.3.13.9
Salvage vehicles 22.9.2.1, 22.9.5.1
Definition 3.3.204
Satellite buildings (definition) 3.3.27.10
Scaffolding, shoring, and forms 16.4.1, A.16.4.1
Scavenged gas (definition) 3.3.124.15
Scene ..... *see* Emergency scene
Scope of code ..... 1.1, A.1.1.1(7)
Seating
In assembly occupancies 20.1.4.10
Folding and telescopic ..... Table 1.12.20(a), 25.1, 25.4, A.25.1.6, A.25.1.8
Grandstands 25.1, 25.3, A.25.1.6, A.25.1.8
Secondary containment 60.3.2.8.3
Tanks (definition) 3.3.236.5
Security service ..... *see* Guard service
Segregated storage
Definition 3.3.225.11
Organic peroxide 70.3.3.1, 70.3.5, A.70.3.5.4.3
Oxidizers ..... 70.2.3(1), 70.2.5.3.1, 70.2.6.3.1, 70.2.6.3.3, 70.2.7.3.1, A.70.2.3(1)
Seismic protection
Battery systems 52.3.9
Compressed gases and cryogenic fluids storage 63.2.14.2
Hazardous materials storage and use 60.1.2.20, A.60.1.2.20
Self-closing (definition) 3.3.205
Self-closing doors 12.8.3.5, 12.9.4.4, 14.5.4, 63.2.17.1.3, A.12.9.4.4, A.14.5.4.1
Self-service stations
Aircraft fueling 42.4.5.22
Attended 42.2.7.4
Unattended 42.2.5.3.8, 42.2.5.7.2, 42.2.6.1.4.1, 42.2.7.5, A.42.2.6.1.4.1, A.42.2.7.5.6
Semiconductor fabrication facilities ..... Chap. 23
Sensitivity analysis ..... *see* Analysis
Separated occupancies ..... 6.1.14.1.1(2), 6.1.14.4
Definition 6.1.14.2.3
Separation of hazards
Aerosol products 61.6.2.6, 61.6.3.1, 61.6.3.2
Compressed gases and cryogenic fluids 63.2.17.5, 63.2.18.1.2, 63.2.18.2 63.3.1.6, 63.3.3.2.2.2, 63.4.6, A.63.3.1.6.2
Definition 3.3.207
Flammable and combustible liquids warehouse storage 66.4.5.2.8
Gas rooms 63.2.4.4
Hazardous materials storage and use 60.3.2.3
LP-Gas containers 69.3.3
Organic peroxide 70.3.4.9.3
Outdoor storage J.5
Tires ..... 33.1.3 to 33.1.5, 33.2.1.3, 33.2.2.4
Spray booths 43.1.3.3, A.43.1.3.3
Shaftways ..... *see* Openings, vertical
Shall (definition) 3.2.8
Shelving, solid ..... *see* Solid shelving
Shop drawings (definition) 3.3.207
Shoring, construction 16.4.1, A.16.4.1
Short-term exposure limit (STEL) (definition) 3.3.147.3, A.3.3.147.3
Should (definition) 3.2.9
Signals
Alarm (definition) 3.3.208.1
Fire alarm signal 13.3.1.7.2, 13.7.1.4.8, 13.7.3.5.2, 13.7.3.6, A.13.7.1.4.8.3, A.13.7.3.6.5
Definition 3.3.208.2

Supervisory signals 13.3.1.7.1, A.13.3.1.7.1
Definition 3.3.208.3
Trouble (definition) 3.3.208.4
Signs ..... *see also* Marking
Aircraft fuel servicing 42.4.2.1.3
Airports 21.2.5, A.21.2.5
Asbestos removal 16.8.3
Assembly occupancies 20.1.4.9.2, 20.1.4.10.3
Baled cotton storage L.5.7.1
Battery systems, location of 52.3.8
Buildings under construction 16.2.3.1.5
Combustible fibers, handling or storage of 45.3.2
Compressed gases and cryogenic fluids 63.2.12, 63.3.6.3.2
Cooking oil fires, extinguishers for 13.6.5.3.2, A.13.6.5.3.2
Cryogenic containers and systems 63.4.4.1.3
Doors ..... 14.5.1.1.4(2), 14.5.2.4(2), 14.5.3.1(4), 14.5.3.2(4), A.14.5.3.1(4)
Egress direction 14.14.2, A.14.14.2
Emergency fuel shutoff stations 42.4.4.4.3
Exit discharge 14.11.5
Fibers, combustible, storage and handling 19.1.7.2
Fireworks facilities 65.11.3.14.5, 65.11.4.6.3
Forest products, storage of 31.3.2.1.2.1, 31.3.2.1.2.2
Hazardous materials identification 60.1.2.11
Health care occupancies ..... 20.4.2.4(1), 20.6.2.4(1)
Heliports, roof-top 21.3.3.5
Marinas and boatyards 28.1.9.4, 28.1.9.5
Means of egress ..... 14.14, 20.1.3.7, 65.11.3.14.5, A.14.14.1.2 to A.14.14.6.5.3, A.20.1.3.7.3
Motor fuel dispensing facilities 42.2.7.2.5.4, 42.2.7.5.3, 42.3.5.3, 42.3.5.5, 42.3.10.8, 42.4.2.5, A.42.2.7.2.5.4
No exit 14.14.6.5.3, A.14.14.6.5.3
Organic peroxide storage 70.3.4.5
Oxidizer storage 70.2.4.7.2
Ozone-gas generating equipment G.4.2, G.4.3, G.5.4
Refrigeration systems 53.14
Roof access 14.6.4.5
Shaftways 10.12.2
Spray application operations 43.1.8.11, 43.7.7
Stair identification 10.12.3, A.10.12.3
Storage occupancies 34.6.5.2
Tires, outside storage of 33.6.1
Wildland fire-prone areas, restricted entry to 17.3.3.3
Silane and silane mixtures 63.3.8.2
Simple asphyxiant gas (definition) 3.3.122.16
Single fire source, assumption of 4.2.1, A.4.2.1
Sisal, baled storage of 45.6.2
SI units 1.5
Smoke alarms 13.7.1.4.8
Apartment buildings 13.7.2.11.4, 13.7.2.11.5, 13.7.2.12.3, A.13.7.2.11.4
Day-care occupancies ... 13.7.2.23.3.1, 13.7.2.24.3.1, 13.7.2.24.3.3, 13.7.2.24.3.4
Definition 3.3.210
Hotels and dormitories 13.7.2.9.3, 13.7.2.10.2, A.13.7.2.9.3
Lodging and rooming houses 13.7.2.13.2
One- and two-family dwelling 13.7.2.14
Residential board and care occupancies ..... 13.7.2.15.1.2 to 13.7.2.15.1.2.4, 13.7.2.16.1.4 to 13.7.2.16.1.4.6, 13.7.2.16.2.2 A.13.7.2.16.1.4
Stock or equipment trailers 10.15.6
Smoke barriers ..... 12.7.4.2, 12.9, 20.1.4.4.3, A.12.7.4.2, A.12.9.1 to A.12.9.4.4
Definition 3.3.211, A.3.3.211
Smoke compartments (definition) 3.3.58.2, A.3.3.58.2
Smoke control systems ..... 11.8, 11.9.5(11), A.11.8
Dedicated (definition) 3.3.234.7
Fireworks facilities 65.11.3.10
Nondedicated (definition) 3.3.234.10
Smoke dampers ..... *see* Dampers
Smoke detectors ..... 13.7.1.4.8, 13.7.4.3.5 to 13.7.4.3.11.2, 13.7.4.6, A.13.7.4.3.5, A.13.7.4.3.11.2; *see also* Detection systems
Assembly occupancies ..... 20.1.3.4 to 20.1.3.6
Battery systems, location of 52.3.10
Compressed gas 63.3.9.7
Day-care occupancies 13.7.2.23.2, 13.7.2.23.3.2, 13.7.2.23.3.3, 13.7.2.24.2, 13.7.2.24.3.2, 13.7.2.24.3.3
Definition 3.3.78.5
Detention and correctional occupancies 13.7.2.7.2, 13.7.2.7.3, 13.7.2.8.2, A.13.7.2.7.2, A.13.7.2.8.2.3
Health care occupancies A.13.7.2.5.3, 13.7.2.6.2, 13.7.2.5.3, A.13.7.2.6.3
Hotels and dormitories 13.7.2.9.2
One- and two-family dwellings 13.7.2.14.1, 13.7.2.14.3
Residential board and care occupancies 13.7.2.15.2.3, 13.7.2.16.2.3
Smoke dampers, closing of 12.8.6.4, 12.9.5.6, 13.7.1.4.9.2.2, A.13.7.1.4.9.2.2
Smoke partitions ..... 12.7.4.2, 12.8, A.12.7.4.2, A.12.8.2(2) to A.12.8.6.2
Definition 3.3.214, A.3.3.214
Smoking ..... 5.3.3(3), 10.10
Aerosol products storage, use, and handling ..... 61.4.6.6.2(5), 61.7.3.1(5), 61.7.3.2
Aircraft fuel servicing 42.4.2.1.3
Aircraft hangars 21.1.3
Airport terminal buildings 21.2.2.3
Assembly occupancies 20.1.4.9
Baled cotton storage L.5.7.1
Board and care occupancies 20.5.2.4
Buildings under construction 16.2.3.1.4, 16.2.3.1.5
Combustible fibers, handling or storage of 45.3
Compressed gases and cryogenic fluids 63.2.12.2.2, 63.3.6.3.2
Definition 3.3.214
Fibers, combustible, storage and handling 19.1.7
Fireworks facilities 65.11.3.11
Flammable and combustible liquids storage, handling, and use ..... 66.2.4.3.1(5), 66.2.4.3.2, 66.4.10(3), 66.5.6.2, 66.5.6(5)
Forest products, storage of 31.3.2.1.2
Hazardous materials, in areas with 60.1.2.9.1
Health care occupancies 20.4.2.4, 20.6.2.4, A.20.4.2.4, A.20.6.2.4
Heliports, roof-top 21.3.2.3, 21.3.3.5
Motor fuel dispensing facilities ... 42.2.7.2.5.1, 42.2.7.5.4, 42.3.5.5, 42.3.10.4(2), 42.4.2.5
Organic peroxide 70.3.4.5
Oxidizer storage 70.2.4.7
Repair garages 30.3.2.1
Spray application operations 43.1.8.11, 43.7.7
Storage occupancies 34.6.5
Temporary membrane structures 25.1.5.4, 25.6.2.2
Tents 25.1.5.4, 25.2.4.2
Tires, outside storage of 33.1.6.1, 33.7.3
Wildland fire-prone areas 17.3.4.1
Smoking areas 10.10.2
Definition 3.3.13.10
Solids
Combustible particulate solid (definition) 3.3.216.1, A.3.3.216.1
Flammable ..... *see* Flammable solids
Solid shelving ..... A.34.7.3.1(5)
Definition 3.3.217
Solvent distillation units 43.1.8.8, 66.5.7, A.43.1.8.8.5
Solvent extraction plants ..... Chap. 44
Permits ..... Table 1.12.20(a), 44.3
Solvents
Chlorinated 43.1.8.10, A.43.1.8.10
Cleaning 43.1.8.7, 43.5.1.1, A.43.1.8.7.4
Soundstages ..... 20.16.1.2, Chap. 32
Spark arresters 10.11.8, 17.3.4.8.3, 17.3.4.9, 31.3.2.1.11
Special amusement buildings 10.9.1, 20.1.3, A.20.1.3
Special outdoor events ..... Table 1.12.20(a), 10.15

Special structures 6.1.1.2, 13.7.2.27, 20.16, A.13.7.2.27.2.1
Extinguishers, portable fire ..... Table 13.6.1.2
LP-Gas storage in 69.5.3.4
Special use (definition) 3.3.244.3
Spillage
Aerosol products 61.6.2.6.1
Aircraft fuel servicing 42.4.5.2, A.42.4.5.2
Compressed gases and cryogenic fluids 63.2.13
Electrolyte 52.3.4, 52.3.5, A.52.3.4.2
Flammable and combustible liquids 66.2.3.2.3, 66.4.6.3.5, 66.4.8.5, 66.5.3.7.2, A.66.4.8.5.1
Hazardous materials storage and use 60.3.2.8, 66.4.6.3.5
Spontaneous ignition 16.2.2.3
Aerosol products storage, use, and handling ..... 61.4.6.6.2(7), 61.7.3.1(7)
Flammable and combustible liquids storage, handling, and use ..... 66.2.4.3.1(7), 66.5.6(7)
Spray application, flammable and combustible liquids ... 43.1.8.9, A.43.1.8.9
Spot-type detectors 13.7.4.3.1, 13.7.4.3.5, 13.7.4.5.1, A.13.7.4.3.5
Definition 3.3.78.6
Spray applications, of flammable and combustible materials ... Chap. 43; *see also* Spray areas; Spray booths; Spray rooms
Drying, curing, or fusion processes 43.4, 43.5.3.7, 43.5.3.8
Drying areas 43.1.5.11, A.43.1.5.11
Electrical equipment and systems ..... 43.1.4, 43.8.5, A.43.1.4.1 to A.43.1.4.6, A.43.8.5.3
Electrostatic equipment
Automated 43.1.7.8, 43.2, A.43.1.7.8
Handheld 43.3
Fire protection systems and equipment ..... 43.1.7, A.43.1.7.1 to A.43.1.7.8
High-pressure hose lines 43.1.8.3
Ignition sources ..... 43.1.4, A.43.1.4.1 to A.43.1.4.6
Limited finishing workstations 43.5.3
Location of 43.1.2, A.43.1.2.1
Operations and maintenance ..... 43.1.8, A.43.1.8.1 to A.43.1.8.12
Organic peroxides and plural component coatings ..... 43.7, A.43.7.1 to A.43.7.6
Outdoor ..... 43.1.1.2(1), A.43.1.1.2(1)
Overspray collectors 43.1.8.4
Permits ..... Table 1.12.20(a), 43.1.8.12, A.43.1.8.12
Portable spraying equipment or aerosol product use ..... 43.1.1.2(2), A.43.1.1.2(2)
Preparation workstations 43.5.2
Storage, handling and distribution of flammable and combustible liquids ..... 43.1.6, A.43.1.6.1 to A.43.1.6.5.2
Styrene cross-linked composites manufacturing ..... 43.8, A.43.8.1 to A.43.8.5.3
Vehicle undercoating and body lining 43.5.1
Ventilation ..... 43.1.3.6, 43.1.5, 43.1.6.3.2(4), 43.8.6, A.43.1.5.3 to A.43.1.5.11
Spray areas 43.1.3, A.43.1.3.1, A.43.1.3.3
Definition 3.3.13.11, A.3.3.13.11
Electrical devices in or adjacent to 43.1.4.3, 43.1.4.4, 43.1.4.7, 43.1.4.8, A.43.1.4.3.2
Extinguishing systems 43.1.7.1, A.43.1.7.1
Flammable and combustible liquids in 43.1.6.2, 43.1.6.3
Sprinklers in 13.3.3.8
Ventilation ..... 43.1.5.2, 43.1.6.3.2(4)
Spray booths ..... 43.1.3, 43.1.4.4.2 to 43.1.4.4.4, 43.1.4.6, 43.1.7.7.2(2), 43.1.7.8.2, A.43.1.3.1, A.43.1.3.3, A.43.1.4.6
Definition 3.3.220
Permit requirements ..... Table 1.12.20(a)
Spray rooms 43.1.3, 43.1.4.4.2, 43.1.4.4.4, 43.1.4.6, A.43.1.3.1, A.43.1.3.3, A.43.1.4.6
Definition 3.3.221
Permit requirements ..... Table 1.12.20(a)
Sprinklers
Alteration or painting of 13.3.3.9, A.13.3.3.9
Penetrations for 12.9.6.4
Quick-response or residential, use of listed 13.3.2.9.4, 13.3.2.13.5, 13.3.2.15.6, A.13.3.2.9.4
Spare, stock of 13.3.3.7, A.13.3.3.7.1, A.13.3.3.7.3
In spray coating areas 13.3.3.8
Temperature ratings 13.3.1.8
Sprinkler systems ..... 11.9.5(6), 13.3, Table 13.8
Aerosol products storage, use, and handling 61.4.6.4.1, 61.6.2.3.1.1, 61.6.2.3.2, 61.6.2.5
Airports 21.2.6, A.21.2.6
Assembly occupancies 20.1.3.2, 20.1.3.6, A.20.1.3.2
Baled cotton storage L.4.1, L.4.6.3, L.6.7.2, L.7.5
Canopies and exterior roofs 13.3.2.4, 21.2.6.2.4
Combustible fibers, storage vaults for 45.5.5.2
Compressed gases and cryogenic fluids 63.2.10, A.63.2.10
Construction, during ... 16.4.2.4, 16.4.3.2, A.16.4.2.4, A.16.4.3.2.1
Cooking equipment 13.3.3.10, 50.4.7.4
Day-care occupancies 13.3.2.27
Demolition of buildings and 16.5.1
Fireworks facilities 65.11.3.6, 65.11.5.3
Flammable and combustible liquids storage, handling, and use 66.4.8.2, 66.4.8.6, 66.5.9.3.4, A.66.4.8.2, A.66.5.9.3.4
Forest products, storage of 31.3.7.4
Freezing, protection from 13.3.3.6
Hazardous material storage and use 60.1.2.10
Highly toxic and toxic solids and liquids storage 68.3.4
High rise buildings 13.3.2.14.1, 13.3.2.24, A.13.3.2.24.2
Hot work operations ..... 41.3.3.2(11)
Impairment 13.3.4
Inspection, testing, and maintenance 13.3.3
Marinas and boatyards A.28.1.8.3.3
Motion picture and television soundstages 32.4.1, A.32.4.1.3.1
Organic peroxide storage 70.3.4.6.2, 70.3.4.6.3, 70.3.5.5, 70.3.6.3, A.70.3.4.6.2
Oxidizer storage 70.2.4.8.2, 70.2.4.8.3, 70.2.6.3.7.2, 70.2.7.3.7.2, 70.2.8.2, 70.2.9.3.1, A.70.2.4.8.3, A.70.2.8.2
Repair garages 30.2.7
Spray application operations ..... 43.1.7.1.1, 43.1.7.4, 43.1.7.8.2(3), 43.8.3, A.43.1.7.4, A.43.8.3
Storage occupancies ..... 20.15.7.1, 34.2.4.6, 34.5.1, 34.5.4.2, 34.5.5.1, 34.6.3.3(1), 34.7.2,A.34.5.1, A.34.5.4.2, A.34.6.6.2
Tents, membrane structures, grandstands, and folding/telescopic seating 25.1.6.1, 25.1.6.2
Tire storage, in buildings ..... Annex M
Ventilating systems 13.3.3.10
Stable liquids (definition) 3.3.148.4
Staff, training of
Business occupancies 20.13.2
Day-care occupancies 20.3.3.2.3.4.5, A.20.3.3.2.3.4.5
Detention and correctional occupancies 20.7.2.1, A.20.7.2.1.2, A.20.7.2.1.3
Fireworks, consumer, handling of 65.11.3.22, A.65.11.3.22
Flammable and combustible liquids storage, handling, and use 43.10.1.1, 66.2.4.6.2, 66.5.9.5
Hazardous materials, handling of 53.15.5, 60.1.2.7, 60.1.2.8.1, D.3.2.8
Health care occupancies 20.4.2.1.2, 20.4.2.1.7, 20.4.2.1.9, 20.4.2.2, 20.6.2.1, 20.6.2.2, A.20.4.2.1.2, A.20.4.2.2.1, A.20.6.2.1.2, A.20.6.2.2.1
Heliports 42.4.4.6
Hotels 20.8.2.1, 20.8.2.2, A.20.8.2.1.1, A.20.8.2.1.2
LP-Gas liquid transfer 69.4.2.1
Maintenance of fire extinguishers 13.6.6.8.3, A.13.6.6.8.3
Mercantile occupancies 20.12.2
Motor fuel dispensing facilities 42.2.7.3, 42.2.7.4, 42.3.10.1, 42.5.2.3
Organic peroxide storage 70.3.4.2
Oxidizer storage 70.2.4.5
Spray application operations 43.5, 43.7.8, 43.10, A.43.10.1
Storage occupancies 34.5.4.2, A.34.5.4.2
Tire storage 33.4.1.3, M.1

Toxic and highly toxic gases storage and use 63.3.9.2.2.1
Wood chips and hogged material, storage of 31.3.6.3.3.2
Stages
Scenery, assembly occupancies ..... 20.1.2, 20.1.4.4, A.20.1.4.4.2 to A.20.1.4.4.6
Sprinkler systems 13.3.2.5.5, 13.3.2.6.5
Standpipe systems 13.2.2.4, A.13.2.2.4
Stairways ..... 11.9.5(5), 14.11.4
Buildings under construction 16.3.4.5
Doors, reentry through 14.5.2.7, A.14.5.2.7
Enclosure and protection of ..... 14.5.2.7, 14.6, 14.7.3, A.14.5.2.7, A.14.6.2 to A.14.6.4
Exit discharge 14.7.3
Interlocking or scissor 14.10.1.4, A.10.1.4.2
Marking 10.12.3, 14.6.4, A.10.12.3, A.14.6.4
As means of escape 4.5.6.2.2
Performance-based design option ..... 5.3.4(4)
Protectives, minimum ratings for ..... Table 12.7.4.2
Width of ..... Table 14.8.3.1
Stakeholder (definition) 3.4.20
Standard cubic foot (scf) (definition) 3.3.222
Standard (definition) 3.2.10
Standard temperature and pressure (definition) 3.3.223
Standby fire personnel 1.7.15, 10.15.4, A.1.7.15.2
Standby power ..... 11.7.2 to 11.7.4, 11.9.5(7), 50.4.7.6
Compressed gases and cryogenic fluids 63.2.6.1
Hazardous materials storage and use 60.3.2.7
Membrane structures 25.5.3.3, 25.6.5.3, A.25.3.3.1
Standpipe systems 13.2
Aerosol products storage, use, and handling 61.4.6.2
Airports 21.2.6.5
Buildings under construction ..... 16.3.5, 16.4.3.3, A.16.4.3.3.1.1 to A.16.4.3.3.2.8
Definition 3.3.233.11
Detention and correctional occupancies 13.2.2.5
Flammable and combustible liquids operations 66.5.9.2.2
Heliports, roof-top 21.3.6.4.2, 21.3.6.8
Marinas and boatyards 28.1.6.3
Marine motor fuel dispensing facilities 42.3.7.2
Permit requirements ..... Table 1.12.20(a)
Static electricity
Aerosol products storage, use, and handling ..... 61.4.6.6.2(9), 61.7.3.1(9), 61.7.7, A.61.7.7
Compressed gases and cryogenic fluids 63.3.6.3.1
Flammable and combustible liquids storage, handling, and use ..... 66.2.4.3.1(9), 66.2.4.3.4, 66.4.10(7), 66.5.6.4, 66.5.6(9), A.66.2.4.3.4, A.66.5.6.4
Hazardous materials storage and use 60.1.2.14.2
Spray application operations 43.1.4.6, A.43.1.4.6
Stationary tanks ..... *see* Tanks
Stop work 1.7.14
Storage ..... *see also* Hazardous materials storage facility; High-piled storage; Incidental liquid use or storage; Inside liquid storage areas; Tanks; Warehouses
Aerosol products 61.4, 61.5, 61.6, A.61.5.1.2, A.61.5.2
Automotive fuel servicing ..... 42.2.3, A.42.2.3.3.2 to A.42.2.3.9
Available height for storage
Definition 3.3.16, A.3.3.16
Baled, combustible fibers ..... 45.6; *see also* Baled cotton
Boats 28.1.7, 28.1.8, A.28.1.7.3, A.28.1.8.3.3
Bulk ..... *see* Bulk storage
Cartoned (definition) 3.3.225.2
Cellulose nitrate motion picture film 20.15.6
Clothing ..... *see* Clothing storage
Compressed gas 63.2.4, 63.2.5, 63.2.17, 63.3.2, 63.3.6.1, 63.3.9.3.1
Corrosive solids and liquids ..... Chap. 64
Cryogenic fluids ..... 63.4, 63.4.12, A.63.4.2 to A.63.4.12.2.6.2.1, A.63.4.12.2.5.4.1 to A.63.4.12.2.6.2.1
Detached ..... *see* Detached storage
Exhibit booths 20.1.4.5.4.10
Exposition facilities 20.1.4.5.3
Fibers ..... Chap. 62
Fireworks facilities 65.11.3.7, 65.11.5.3, 65.11.6.4.3
Flammable and combustible liquids ..... Chap. 66
Flammable solids ..... Chap. 67
Forest products ..... Chap. 31
Of fueled equipment 10.19.7
Hay, straw, and other agricultural products 45.7
Hazardous materials ..... *see* Hazardous materials
Highly toxic and toxic solids and liquids ..... Chap. 68
High-piled ..... *see* High-piled storage
Isolated (definition) 3.3.225.5
Organic peroxide 43.7.4, 43.8.7.1
Outdoor storage ..... *see* Outdoor storage
Oxidizers ..... *see* Oxidizers
Oxygen-fuel gas cylinders and containers 41.5.5.2
Pyrophoric solids and liquids ..... Chap. 71
Records 20.15.5, A.20.15.5.2
Refrigerant machinery rooms 53.10.8, 53.19
Resins 43.8.4
Segregated ..... *see* Segregated storage
Tires ..... *see* Tire storage
Unstable (reactive) solids and liquids ..... Chap. 72
Waste and rubbish, combustible 19.1.6.1, 19.1.7
Water-reactive solids and liquids ..... Chap. 73
Yards ..... *see* Yards
Storage aids (definition) ..... 3.3.226; *see also* Palletized storage
Storage cabinets ..... *see also* Gas cabinets; Liquid storage cabinets
Hazardous materials 60.1.2.18, 60.1.2.23
Storage occupancies ..... 10.19, 20.15, Chap. 34, A.20.15.5.2
Christmas tree provisions ..... Table 10.14.1
Definition 3.3.165.25, 6.1.13.1, A.3.3.165.25, A.6.1.13.1
Detection, alarm, and communication systems 13.7.2.22
Extinguishers, portable fire ..... Table 13.6.1.2
Hazardous materials ..... Table 60.3.2.3
Means of egress, occupant load ..... Table 14.8.1.2
Mini-storage buildings
Definition 3.3.165.25.1
Sprinkler systems 13.3.2.25.4
Multiple occupancies ..... 6.1.14.1.2, Table 6.1.14.4.1, A.6.1.14.1.2
Permits ..... Table 1.12.20(a), 20.15.2, 20.15.6.2, 20.15.7.2
Sprinkler systems 13.3.2.25, A.13.3.2.25
Storage tank buildings (definition) 3.3.27.11
Storage tanks ..... *see* Tanks
Stored electrical energy systems 11.7.3, 11.7.4.3
Stores
Definition 3.3.227, A.3.3.227
Fireworks sales at ..... *see* Fireworks, Consumer
Story
Definition 3.3.228
Means of egress, number of 14.9.1.1, 14.9.1.2
Occupiable (definition) 3.3.228.1, A.3.3.228.1
Street (definition) ..... 3.3.229; *see also* Roadways
Street floor (definition) 3.3.230, A.3.3.230
Structural failure, occupant protection from 5.2.2.8
Structural integrity 4.1.4.2.3
Structures ..... *see also* Buildings
Access to ..... *see* Access, fire-fighting
Definition 3.3.231, A.3.3.231
Special 20.16
Styrene cross-linked composites manufacturing ..... 43.8, A.43.8.1 to A.43.8.5.3
Sub-floor work areas, repair garages 30.2.6, 30.2.8.3
Submersible pumping systems 42.2.5.4
Summarily abate (definition) 3.3.232
Supervision
Cooking equipment alarm systems ..... 50.4.4.10, 50.4.9, A.50.4.4.10(4)
Fire pump valves 13.4.3, A.13.4.3
Sprinkler systems 13.3.1.7, A.13.3.1.7.1
Supervisory signals ..... *see* Signals
Suppression systems ..... *see* Extinguishing systems

Systems ..... *see also* specific systems
Definition 3.3.233
Design/installation 4.4.6

-T-

Tactics (definition) 3.3.234
Tank cars ..... 66.5.5, A.66.5.5.3 to A.66.5.5.12
Tanks
Aboveground
Alternative fuels 42.2.8.3, A.42.2.8.3.3
Definition 3.3.235.1, 3.3.235.2
Flammable and combustible liquids storage ..... 66.2, A.66.2.3.1.1 to A.66.2.5.7.4
Hazardous materials ..... 60.1.2.11.2.1(1)
Motor vehicle fuel dispensing facilities .... 42.2.2.2.2, 42.2.3.2.1, 42.2.3.3.2,42.2.3.5 to 42.2.3.11, 42.2.7.2.2.5, A.42.2.3.3.2
Fire-resistant 42.2.3.5
Protection ..... 42.2.3.6 to 42.2.3.9, A.42.2.3.8, A.42.2.3.9
Vaults 42.2.3.4
Protected (definition) 3.3.236.2.1
Aboveground storage tank
Definition 3.3.235.1
ASME ..... *see* ASME containers or tanks
Cargo 42.3.9
Compressed gas ..... 63.3.1, A.63.3.1.1 to A.63.3.1.10.3
Flammable and combustible liquids ..... 66.2, 66.5.3.7.1, 66.5.3.7.4, 66.5.4.4.2, 66.5.4.5, A.66.2.3.1.1 to A.66.2.5.7.4, A.66.5.4.5(3)
Fuel
Aircraft fuel 42.4.3.3, A.42.4.3.3.1
Boat storage and 28.1.8.1.5
Fire pump fuel supply 13.4.4.4, A.13.4.4.4
Generators 25.1.12.2
Heliports 21.3.3.2
Hazardous materials ..... 60.1.1.2, 60.1.2.22.2, 60.1.2.24, 60.1.3.3.3(3)(a)
Motor vehicle fuel dispensing facilities ..... 42.2.3, 42.2.7.2.2.4, 42.2.7.2.2.5, 42.2.7.4, 42.3.2, 42.3.8, A.42.2.3.3.2 to A.42.2.3.9, A.42.3.2.2, A.42.3.8.2
Portable 42.3.8, 43.1.6.5.1, A.42.3.8.2
Definition 3.3.235.4
Flammable and combustible liquids ..... 66.4, 66.4.4.3.9, 66.4.7, 66.5.3.7.8, 66.5.3.7.9, 66.5.4.2, 66.5.4.4.1, A.66.4.2.1(5) to A.66.4.10.2
Mixing tanks 43.1.6.3.1
Secondary containment (definition) 3.3.235.5
Stationary (definition) 3.3.235.6
Storage (definition) 3.3.235.7
Underground ..... 42.2.2.2.2, 42.2.3.3.1, 66.2.1(1), 66.2.5.1.4, 66.2.5.5, A.66.2.5.5.4(2); *see also* LP-Gas containers
Water supply 61.4.6.4.2
Tank vehicles ..... 42.2.7.2.2, 42.2.7.6, 42.3.9, 42.4.5.17 to 42.4.5.20, 66.5.5, A.42.2.7.2.2.1, A.66.5.5.3 to A.66.5.5.12
Tar kettles ..... *see* Kettles
Technical assistance 1.15, 5.1.5, A.1.15, A.5.1.5
Telephones, two-way 13.7.2.27.2.2
Television production soundstages ..... 20.16.1.2, Chap. 32
Temporary heating equipment ..... *see* Heating equipment and appliances
Temporary wiring 11.1.6
Definition 3.3.236
Tensioned-membrane structures 25.5.2, 25.6.4
Tents 25.1, 25.2, A.25.1.6, A.25.1.8
Fireworks sales ..... *see* Fireworks
Permits ..... Table 1.12.20(a), 25.1.2
Terminal buildings, airport ..... *see* Airport terminal buildings
Testing ..... *see* Inspection, testing, and maintenance
Ties, outside storage of ..... 31.3.1.1(3), 31.3.5, A.31.3.5.1.1 to A.31.3.5.3.5
Tire-rebuilding plants ..... Table 1.12.20(a)
Tires ..... *see also* Tire storage
Rubber (definition) 3.3.237.1
Scrap (definition) 3.3.237.2
Tire storage ..... 34.1.1, 34.8, A.34.1.1.2(7), A.34.8.1 to A.34.8.3.1.1
Banded (definition) 3.3.225.1
Bulk storage 20.15.4
Automobile wrecking yards 22.7
Sprinkler systems for 13.3.2.25.5
Laced ..... Fig. A.34.8.1(g)
Definition 3.3.225.6, A.3.3.225.6
Miscellaneous (definition) 3.3.225.7, A.3.3.225.7
On-side ..... Fig. A.34.8.1(e)
Definition 3.3.225.8
On-tread ..... 34.8.3.1.3, Fig. A.34.8.1(f)
Definition 3.3.225.9
Outside storage ..... Table 1.12.20(a), Chap. 33
Altered tire material, storage of 33.1.7, 33.1.8, 33.7, A.33.7.5
Sprinklered buildings, fire fighting recommendations for ..... Annex M
Title of code 1.1.2
Torch-applied roofing systems ..... Table 1.12.20(a), 16.6
Torches, use of ..... *see* Hot work
Towers 13.7.2.27.1
Toxic gas ..... 60.3.2.5.1, 63.1.3.1(2)(d), 63.1.3.4.1, 63.2.3.1.4, Table 63.2.3.1, Table 63.3.1.6.2, 63.3.9, A.63.3.9.3.6; *see also* Compressed gas
Definition 3.3.122.17
Permit amounts for ..... Table 1.12.20(b), Table 1.12.20(d)
Refrigerants 53.8.2, 53.8.5
Toxic materials (solids and liquids) ..... Tables 60.1.3.2(a) to (h), Table 60.1.3.3(b), Table 60.2.6.5, Chap. 68; *see also* Hazardous materials
Definition 3.3.156.11
Permit amounts for ..... Table 1.12.20(d)
Secondary containment ..... Table 60.3.8.2.3
Tracer bullets and tracer charges 17.3.4.2
Trade secrets 1.7.10.4
Trade shows ..... *see* Exhibits
Traffic calming devices 18.2.3.4.7
Training
Board and care occupancy residents, of 20.5.2.2
Staff ..... *see* Staff, training of
Treated finishes 12.6
Treatment systems (definition) 3.3.233.12
Trouble signals ..... *see* Signals
Truck repair garages ..... *see* Repair garages
Turbines, gas 11.7.1
Two-family dwellings ..... *see* One- and two-family dwellings

-U-

Unauthorized discharge (definition) 3.3.239
Uncertainty analysis ..... *see* Analysis
Underground releases, flammable and combustible liquids 66.7, A.66.7
Underground structures
Emergency plans 10.9.1
Parking structures 29.1.1
Definition 3.3.165.20.1
Sprinkler systems 13.3.2.23
Underground tanks ..... *see* Tanks
Unit operation or process (definition) 3.3.240
Units of measurement 1.5
Unit (vessel), operating or process ..... *see* Operating or process unit (vessel)
Unstable (reactive) gas ..... 63.1.3.1(1)(e), 63.1.3.1(1)(f), Table 63.2.3.1, Table 63.2.9, Table 63.3.1.6.2, 63.3.10; *see also* Compressed gas; Hazardous materials
Definition 3.3.122.18, A.3.3.122.18

Permit amounts for ..... Table 1.12.20(b), Table 1.12.20(d)
Unstable (reactive) materials (solids and liquids) .... Tables 60.1.3.2(a) to (h), Table 60.3.2.6, Chap. 72; *see also* Hazardous materials
Definition 3.3.156.12
Permit amounts for ..... Table 1.12.20(d)
Secondary containment ..... Table 60.3.2.8.3
Specific occupancies, storage and use in ..... Tables 60.1.3.2(a) to (h)
Untenable conditions, occupant protection from 5.2.2.6
Use
Closed system use (definition) 3.3.244.1, A.3.3.244.1
Incidental liquid use or storage (definition) 3.3.142
Open system use
Definition 3.3.244.2
Special use (definition) 3.3.244.3
Utilities 11.4
Utility plants, LP-Gas at 69.7

-V-

Vacant buildings ..... 5.3.3(8), 10.13, A.10.13.2.1
Valve-regulated batteries ..... *see* Batteries (lead-acid)
Valves ..... *see also* Excess flow valve
Compressed gas systems 63.3.3.1.5
Cryogenic fluid piping systems ..... 63.4.13.4 to 6.4.13.6
Fire pump valves, supervision of 13.4.3, A.13.4.3
Indicating (definition) 3.3.245.1
LP-Gas systems and equipment 69.2.3, 69.3.7, 69.3.8, 69.3.13.3.8, 69.3.13.3.10, 69.5.2.2, A.69.3.8.8
Outlet cap or plug 63.3.9.3.1.1, 63.3.15.3
Definition 3.3.245.3
Ozone gas-generating equipment G.5
Protection cap 63.3.1.5.3
Definition 3.3.245.4
Protection device 63.3.1.5
Definition 3.3.245.5
Reduced flow (definition) 3.3.245.2
Water-control ..... Table 1.12.20(a)
Vapor pressure (definition) 3.3.246, A.3.3.246
Vapor processing systems (definition) 3.3.233.13
Vapor recovery systems 42.2.5.8
Definition 3.3.233.14
Vapors, flammable ..... *see* Flammable vapors
Vaults
Combustible fiber storage 45.5.4
Doors 12.4.3, A.12.4.3
Flammable and combustible liquids, aboveground tanks for 66.2.2.2
Motor vehicle fuel dispensing facility tank 42.2.3.4
Vegetation, combustible ..... 5.3.3(9), 10.13.1, 10.14, 17.3.5, 33.5.2, 60.1.2.21, 63.3.1.6.3, 65.11.4.6.1, 68.3.3, A.10.14.3, A.10.14.9.4, A.17.3.5.1.5, L.6.8
Vehicles ..... *see* Motor vehicles
Vented batteries ..... *see* Batteries (lead-acid)
Ventilation systems ..... *see* Heating, ventilating, and air conditioning (HVAC) systems
Venting
Compressed gases and cryogenic fluids 63.2.15, 63.3.3.1.6
Deflagration 42.5.1.4.3.3, 42.5.1.4.3.4.1, A.42.5.1.4.3.3
Emergency relief venting (definition) 3.3.87
Flammable and combustible liquids processing areas 66.5.3.3.4, A.66.5.3.3.4
LP-Gas 69.3.5.4.2, 69.4.3
Vents
Cleaning 50.5.4, A.50.5.4.2
Emergency smoke and heat .... 34.3.2, 34.5.4.2(4), A.34.3.3, L.2.2
Heating equipment and appliances 11.5.4
Tanks, flammable and combustible liquids storage 66.2.2.5.1, 66.2.2.5.2
Verification method (definition) 3.4.22
Vertical openings ..... *see* Openings, vertical
Vessels, marine ..... *see* Marine vessels
Vessels, process ..... *see* Operating or process unit (vessel)
Violations of code 1.16, 10.1.4
Model citation program ..... Annex E

-W-

Walls
Fire ..... 12.3, 12.7.5, A.12.3.2, A.12.7.5.6.3(1)(c)
Fire barrier ..... 12.7.2, 12.7.5, A.12.7.5.6.3(1)(c)
Temporary separation, construction site 16.4.2, A.16.4.2.4
Warehouses
General-purpose
Definition 3.3.249.1
Flammable and combustible liquids storage in 66.4.5.2
Liquid ..... 66.4.4.1, Table 66.4.4.2.1, 66.4.4.4.4
Definition 3.3.249.2
Warrant of fitness 4.5.5
Waste, combustible ..... Chap. 19, 43.1.8.5, A.43.1.8.5
Aerosol containers 61.7.5
Baled cotton storage L.6.5
Buildings under construction 16.2.2, A.16.2.2.1, A.16.2.2.4
Definition 3.3.54, A.3.3.54
Demolition sites 16.5.3
Forest products, storage of 31.3.2.1.1, A.31.3.2.1.1
Waste recycling facilities 31.3.7, A.31.3.7
Motor vehicle fuel dispensing facilities 42.2.7.2.6
Organic peroxide storage 70.3.4.7, A.70.3.4.7.2
Oxidizer storage 70.2.4.9, A.70.2.4.9.2, A.70.2.4.9.5
Repair garages 30.3.2.4
Storage occupancies 34.6.4
Vacant buildings 10.13.1
Wildland fire-prone areas 17.3.4.7.2
Water capacity (definition) 3.3.250
Water-control valves ..... Table 1.12.20(a)
Waterflow alarms ..... 11.9.5(6), 13.7.3.6, 34.5.5.1, A.13.7.3.6.5
Water mist extinguishing systems ..... Table 13.8, 66.4.8.3
Water-reactive materials .... Table 60.1.3.1, Tables 60.1.3.2(a) to (h), Table 60.2.6.5, Table 60.3.2.6, 66.4.10.1,Chap. 73, A.66.4.10.1,; *see also* Hazardous materials
Class 1 (definition) 3.3.157.12.1
Class 2 (definition) 3.3.157.12.2
Class 3 (definition) 3.3.157.12.3
Definition 3.3.156.13
Permit amounts for ..... Table 1.12.20(d)
Water spray systems ..... Table 13.8
Airport terminal buildings 21.2.3.5.3
Flammable and combustible liquids storage, handling, and use 66.4.8.3, 66.5.9.3.4, A.66.5.9.3.4
Organic peroxide storage 70.3.4.6.2, A.70.3.4.6.2
Water supplies ..... 13.5, 18.3, A.18.3.1 to A.18.3.3
Aerosol products storage, use, and handling 61.4.6.4
Assembly occupancies 20.1.3.3
Baled cotton storage L.4.2
Buildings under construction 16.4.3.1, A.16.4.3.1.1
Flammable and combustible liquids storage, handling, and use 66.4.8.4, 66.5.9.3.1, 66.5.9.3.2, A.66.5.9.3.2
Foam extinguishing systems 21.3.6.4
Forest products, storage of 31.3.3.2.2, 31.3.4.3.1, 31.3.5.3.2, 31.3.6.3.5, 31.3.8.3.4, A.31.3.3.2.2, A.31.3.4.3.1, A.31.3.5.3.2, A.31.3.6.3.5, A.31.3.8.3.4
Marinas and boatyards 28.1.6.2.4, 28.1.6.4, 28.1.8.3.1, A.28.1.6.2.4
Oxidizer storage 70.2.4.8.1.1
Private 18.3.5
Spray application operations 43.1.7.4.3
Sprinkler systems 43.1.7.4.3, 70.3.4.6.3
Storage occupancies 34.6.6.2, A.34.6.6.2
Tires, outside storage of 33.4.2
Welding and cutting ..... *see* Hot work operations
Wet chemical extinguishing systems ..... Table 13.8
Wet pipe sprinkler systems 13.3.3.6, 66.4.8.2, 70.3.4.6.2.1, A.13.3.3.11, A.66.4.8.2

Wetting agent extinguishing units L.4.4.3
Wharves ..... 28.1.7.2, 28.2, A.28.2.2 to A.28.2.4; *see also* Piers
Definition 3.3.251
Wildland fire–prone areas ..... 17.3, A.17.3.1 to A.17.3.5.1.5
Permits ..... Table 1.12.20(a), 17.3.2, A.17.3.2
Wildland/urban interface ..... Chap. 17
Definition 3.3.252
Windowless structures
Emergency plans 10.9.1
Sprinkler systems 13.3.2.23
Windows ..... *see also* Opening protectives
Fire windows ..... *see* Fire windows
Fireworks facilities 65.11.3.6.1, 65.11.5.3.1
Motor fuel dispensing facilities 30.1.6.3, 42.2.6.5.3
Sprinkler temperature ratings ..... Table 13.3.1.8(b)
Wiring ..... *see also* Electrical equipment and systems
For oil-burning appliances 11.5.1.7
Permanent ..... 11.1.3 to 11.1.5
Temporary 11.1.6
Definition 3.3.237
Wood ..... *see also* Logs
Cordwood (definition) 3.3.70
Lumber ..... *see also* Lumber yards
Definition 3.3.152
Storage, manufacturing, and processing of ..... Chap. 31
Wood chips, storage of ..... 31.3.6, A.31.3.6.1 to A.31.3.6.4.3
Wooden panels
Definition 3.3.253
Outside storage of ..... Chap. 31
Wood processing and woodworking facilities ..... Table 1.12.20(a), 13.3.2.26, 31.1, 31.3.9, A.31.1
Wrecking yards ..... *see* Automobile wrecking yards
Written notice (definition) 3.3.254

-Y-

Yards
Automobile wrecking ..... Table 1.12.20(a), Chap. 22
Exit discharge 14.11.1.1
Storage ..... *see also* Baled cotton; Outdoor storage
Definition 3.3.225.12
Forest products storage ..... Chap. 31

-Z-

Zoned egress, Use condition II (definition) 3.3.165.8.1.2
Zoned impeded egress, Use condition III (definition) 3.3.165.8.1.3
Zoning, alarm 13.7.1.4.13, A.13.7.1.4.13.2.1, A.13.7.1.4.13.2.2

Sequence of Events Leading to Publication of an NFPA Committee Document

Call goes out for proposals to amend existing document or for recommendations on new document.

▼

Committee meets to act on proposals, to develop its own proposals, and to prepare its report.

▼

Committee votes on proposals by letter ballot. If two-thirds approve, report goes forward. Lacking two-thirds approval, report returns to committee.

▼

Report — *Report on Proposals* (ROP) — is published for public review and comment.

▼

Committee meets to act on each public comment received.

▼

Committee votes on comments by letter ballot. If two-thirds approve, supplementary report goes forward. Lacking two-thirds approval, supplementary report returns to committee.

▼

Supplementary report — *Report on Comments* (ROC) — is published for public review.

▼

NFPA membership meets (Annual or Fall Meeting) and acts on committee report (ROP or ROC).

▼

Committee votes on any amendments to report approved at NFPA Annual or Fall Meeting.

▼

Appeals to Standards Council on Association action must be filed within 20 days of the NFPA Annual or Fall Meeting.

▼

Standards Council decides, based on all evidence, whether or not to issue standard or to take other action, including upholding any appeals.

Committee Membership Classifications

The following classifications apply to Technical Committee members and represent their principal interest in the activity of a committee.

M *Manufacturer:* A representative of a maker or marketer of a product, assembly, or system, or portion thereof, that is affected by the standard.

U *User:* A representative of an entity that is subject to the provisions of the standard or that voluntarily uses the standard.

I/M *Installer/Maintainer:* A representative of an entity that is in the business of installing or maintaining a product, assembly, or system affected by the standard.

L *Labor:* A labor representative or employee concerned with safety in the workplace.

R/T *Applied Research/Testing Laboratory:* A representative of an independent testing laboratory or independent applied research organization that promulgates and/or enforces standards.

E *Enforcing Authority:* A representative of an agency or an organization that promulgates and/or enforces standards.

I *Insurance:* A representative of an insurance company, broker, agent, bureau, or inspection agency.

C *Consumer:* A person who is, or represents, the ultimate purchaser of a product, system, or service affected by the standard, but who is not included in the *User* classification.

SE *Special Expert:* A person not representing any of the previous classifications, but who has special expertise in the scope of the standard or portion thereof.

NOTE 1: "Standard" connotes code, standard, recommended practice, or guide.

NOTE 2: A representative includes an employee.

NOTE 3: While these classifications will be used by the Standards Council to achieve a balance for Technical Committees, the Standards Council may determine that new classifications of members or unique interests need representation in order to foster the best possible committee deliberations on any project. In this connection, the Standards Council may make such appointments as it deems appropriate in the public interest, such as the classification of "Utilities" in the National Electrical Code Committee.

NOTE 4: Representatives of subsidiaries of any group are generally considered to have the same classification as the parent organization.

FORM FOR PROPOSALS ON NFPA TECHNICAL COMMITTEE DOCUMENTS

Mail to: Secretary, Standards Council
National Fire Protection Association, 1 Batterymarch Park, Quincy, Massachusetts 02269-9101
Fax No. 617-770-3500

Note: All proposals must be received by 5:00 p.m. EST/EDST on the published proposal-closing date.

If you need further information on the standards-making process, please contact the Standards Administration Department at 617-984-7249.
For technical assistance, please call NFPA at 617-770-3000

Please indicate in which format you wish to receive your ROP/ROC: ☐ paper ☐ electronic ☐ download
(Note: In choosing the download option you intend to view the ROP/ROC from our website; no copy will be sent to you.)

Date 9/18/93 Name John B. Smith Tel. No. 617-555-1212

Company

Street Address 9 Seattle St., Seattle, WA 02255

Please Indicate Organization Represented (if any) Fire Marshals Assn. of North America

1. a) NFPA Document Title National Fire Alarm Code NFPA No. & Year NFPA 72, 1993 ed.

b) Section/Paragraph 1-5.8.1 (Exception No.1)

FOR OFFICE USE ONLY
Log #
Date Rec'd

2. Proposal Recommends: (Check one) ☐ new text ☐ revised text ☒ deleted text

3. Proposal (include proposed new or revised wording, or identification of wording to be deleted): (Note: Proposed text should be in legislative format: i.e., use underscore to denote wording to be inserted (inserted wording) and strike-through to denote wording to be deleted (~~deleted wording~~).

Delete exception.

SAMPLE

4. Statement of Problem and Substantiation for Proposal: (Note: State the problem that will be resolved by your recommendation; give the specific reason for your proposal including copies of tests, research papers, fire experience, etc. If more than 200 words, it may be abstracted for publication.)

A properly installed and maintained system should be free of ground faults. The occurrence of one or more ground faults should be required to cause a "trouble" signal because it indicates a condition that could contribute to future malfunction of the system. Ground fault protection has been widely available on these systems for years and its cost is negligible. Requiring it on all systems will promote better installations, maintenance and reliability.

5. ☒ This Proposal is original material. (Note: Original material is considered to be the submitter's own idea based on or as a result of his/her own experience, thought, or research and, to the best of his/her knowledge, is not copied from another source.)

☐ This Proposal is not original material; its source (if known) is as follows:

Note 1: Type or print legibly in black ink.
Note 2: If supplementary material (photographs, diagrams, reports, etc.) is included, you may be required to submit sufficient copies for all members and alternates of the technical committee.

I hereby grant the NFPA all and full rights in copyright, in this proposal, and I understand that I acquire no rights in any publication of NFPA in which this proposal in this or another similar or analogous form is used.

John B. Smith
Signature (Required)

9/99B

FORM FOR PROPOSALS ON NFPA TECHNICAL COMMITTEE DOCUMENTS

Mail to: Secretary, Standards Council
National Fire Protection Association, 1 Batterymarch Park, Quincy, Massachusetts 02269-9101
Fax No. 617-770-3500

Note: All proposals must be received by 5:00 p.m. EST/EDST on the published proposal-closing date.

If you need further information on the standards-making process, please contact the Standards Administration Department at 617-984-7249.
For technical assistance, please call NFPA at 617-770-3000

Please indicate in which format you wish to receive your ROP/ROC: ☐ paper ☐ electronic ☐ download
(Note: In choosing the download option you intend to view the ROP/ROC from our website; no copy will be sent to you.)

Date _____ **Name** _____ **Tel. No.** _____

Company _____

Street Address _____

Please Indicate Organization Represented (if any) _____

1. a) NFPA Document Title _____ **NFPA No. & Year** _____

b) Section/Paragraph _____

2. Proposal Recommends: (Check one) ☐ **new text** ☐ **revised text** ☐ **deleted text**

FOR OFFICE USE ONLY
Log # _____
Date Rec'd _____

3. Proposal (include proposed new or revised wording, or identification of wording to be deleted): (Note: Proposed text should be in legislative format: i.e., use underscore to denote wording to be inserted (inserted wording) and strike-through to denote wording to be deleted (~~deleted wording~~).

4. Statement of Problem and Substantiation for Proposal: (Note: State the problem that will be resolved by your recommendation; give the specific reason for your proposal including copies of tests, research papers, fire experience, etc. If more than 200 words, it may be abstracted for publication.)

5. ☐ This Proposal is original material. (Note: Original material is considered to be the submitter's own idea based on or as a result of his/her own experience, thought, or research and, to the best of his/her knowledge, is not copied from another source.)

☐ This Proposal is not original material; its source (if known) is as follows: _____

Note 1: Type or print legibly in black ink.
Note 2: If supplementary material (photographs, diagrams, reports, etc.) is included, you may be required to submit sufficient copies for all members and alternates of the technical committee.

I hereby grant the NFPA all and full rights in copyright, in this proposal, and I understand that I acquire no rights in any publication of NFPA in which this proposal in this or another similar or analogous form is used.

_____
Signature (Required)

PLEASE USE SEPARATE FORM FOR EACH PROPOSAL

IMPORTANT NOTICES AND DISCLAIMERS CONCERNING NFPA DOCUMENTS

(Continued from inside front cover)

ADDITIONAL NOTICES AND DISCLAIMERS

Updating of NFPA Documents

Users of NFPA codes, standards, recommended practices, and guides should be aware that these documents may be superseded at any time by the issuance of new editions or may be amended from time to time through the issuance of Tentative Interim Amendments. An official NFPA document at any point in time consists of the current edition of the document together with any Tentative Interim Amendments and any Errata then in effect. In order to determine whether a given document is the current edition and whether it has been amended through the issuance of Tentative Interim Amendments or corrected through the issuance of Errata, consult appropriate NFPA publications such as the National Fire Codes Subscription Service, visit the NFPA website at www.nfpa.org, or contact the NFPA at the address listed below.

Interpretations of NFPA Documents

A statement, written or oral, that is not processed in accordance with Section 6 of the Regulations Governing Committee Projects shall not be considered the official position of NFPA or any of its Committees and shall not be considered to be, nor be relied upon as, a Formal Interpretation.

Patents

The NFPA does not take any position with respect to the validity of any patent rights asserted in connection with any items which are mentioned in or are the subject of NFPA codes, standards, recommended practices, and guides, and the NFPA disclaims liability for the infringement of any patent resulting from the use of or reliance on these documents. Users of these documents are expressly advised that determination of the validity of any such patent rights, and the risk of infringement of such rights, is entirely their own responsibility.
NFPA adheres to applicable policies of the American National Standards Institute with respect to patents. For further information, contact the NFPA at the address listed below.

Laws & Regulations

Users of these documents should consult applicable federal, state, and local laws and regulations. NFPA does not, by the publication of its codes, standards, recommended practices, and guides, intend to urge action that is not in compliance with applicable laws, and these documents may not be construed as doing so.

Copyrights

This document is copyrighted by the NFPA. It is made available for a wide variety of both public and private uses. These include both use, by reference, in laws and regulations, and use in private self-regulation, standardization, and the promotion of safe practices and methods. By making this document available for use and adoption by public authorities and private users, the NFPA does not waive any rights in copyright to this document.

Use of NFPA documents for regulatory purposes should be accomplished through adoption by reference. The term "adoption by reference" means the citing of title, edition and publishing information only. Any deletions, additions, and changes desired by the adopting authority should be noted separately in the adopting instrument. In order to assist NFPA in following the uses made of its documents, adopting authorities are requested to notify the NFPA (Attention: Secretary, Standards Council) in writing of such use. For technical assistance and questions concerning adoption of NFPA documents, contact NFPA at the address below.

For Further Information

All questions or other communications relating to NFPA codes, standards, recommended practices, and guides and all requests for information on NFPA procedures governing its codes and standards development process, including information on the procedures for requesting Formal Interpretations, for proposing Tentative Interim Amendments, and for proposing revisions to NFPA documents during regular revision cycles, should be sent to NFPA headquarters, addressed to the attention of the Secretary, Standards Council, NFPA, 1 Batterymarch Park, P.O. Box 9101, Quincy, MA 02269-9101.

For more information about NFPA, visit the NFPA website at www.nfpa.org.